CCD-TR42/TR70/TR72/TR80/TR82/ TR400/TR430/TR550/TR750

RMT-708

SERVICE MANUAL

US Model
CCD-TR70/TR72/TR80/TR82/TR400

Canadian Model
CCD-TR42/TR70/TR80/TR82/TR400

E Model
CCD-TR430/TR550/TR750

Tourist Model
CCD-TR550/TR750

Phote : CCD-TR42

Handycam

A MECHANISM

We will inform you of the electrical adjustment of the color view finder in the future.

In this service manual, board names will be different for each model and indicated as follows.

	TR42/TR70/TR82/TR550	TR72/TR80/TR400/TR430/TR750
VC BOARD	VC-145 BOARD	VC-138 BOARD
VS BOARD	VS-112 BOARD	VS-104 BOARD
DD BOARD	DD-66 BOARD	DD-60 BOARD

For MECHANISM ADJUSTMENTS, refer to the "8 mm Video MECHANICAL ADJUSTMENT MANUAL Ⅳ" (9-973-199-11).

SPECIFICATIONS

System
Video recording system: Two rotary heads, Helical scanning, FM system
Audio recording system: Rotary heads, FM system
Video signal: NTSC color, EIA standards
Usable cassette: 8 mm video format cassette (standard 8 mm)
Tape speed: <SP mode> Approx. 19/32 inches (1.43 cm)/second, <LP mode> Approx. 5/16 inches (0.72 cm)/second (playback only)
Recording time: SP mode 2 hours (P6-120)
Playback time: <SP mode> 2 hours (P6-120), <LP mode> 4 hours (P6-120)
Fastforward/rewind time: Approx. 6 min. 30 sec. (P6-120)
Image devide: CCD (Charge Coupled Device)

Viewfinder: See the table on the next page.
Lens: See the table on the next page.
Color temperature: Auto
Minimum illumination: See the table on the next page.
Illumination range: See the table on the next page.
Recommended illumination: More than 100 lx

Output connector
Video output: Phono jack, 1 Vp-p, 75 Ω, unbalanced, sync negative
Audio output: See the table on the next page.
RFU DC OUT: Special minijack, DC 5 V
Headphones/Earphone jack: See the table on the next page.
LANC jack: Stereo mini-minijack (ø 2.5 mm)
MIC jack: See the table on the next page.

General
Power requirements: On battery mounting surface 6.0 V (battery pack), 7.5 V (AC power adaptor)
Average power consumption: See the table on the next page.
Installation: Vertically, Horizontally
Operating temperature: 32°F to 104°F (0°C to 40°C)
Storage temperature: −4°F to +140°F (−20°C to +60°C)
Dimensions: See the table on the next page.
Mass: See the table on the next page.
Microphone: See the table on the next page.

— Continued on next page —

8 VIDEO CAMERA RECORDER
CCD-TR42/TR70/TR72/TR80/TR82/TR430/TR550

Hi8 VIDEO CAMERA RECORDER
CCD-TR400/TR750

MICROFILM

SONY

CCD-TR42/TR70/TR72/TR80/TR82/ TR400/TR430/TR550/TR750

RMT-708

SERVICE MANUAL

US Model
CCD-TR70/TR72/TR80/TR82/TR400

Canadian Model
CCD-TR42/TR70/TR80/TR82/TR400

E Model
CCD-TR430/TR550/TR750

Tourist Model
CCD-TR550/TR750

Photo : CCD-TR42

Handycam

A MECHANISM

We will inform you of the electrical adjustment of the color view finder in the future.

In this service manual, board names will be different for each model and indicated as follows.

	TR42/TR70/TR82/TR550	TR72/TR80/TR400/TR430/TR750
VC BOARD	VC-145 BOARD	VC-158 BOARD
VS BOARD	VS-112 BOARD	VS-104 BOARD
DD BOARD	DD-88 BOARD	DD-80 BOARD

For MECHANISM ADJUSTMENTS, refer to the "8 mm Video MECHANICAL ADJUSTMENT MANUAL IV" (9-873-199-11).

SPECIFICATIONS

System
Video recording system: Two rotary heads, Helical scanning, FM system
Audio recording system: Rotary heads, FM system
Video signal: NTSC color, EIA standards
Usable cassette: 8 mm video format cassette (standard 8 mm)
Tape speed: <SP mode> Approx. 19/32 inches (1.43 cm)/second, <LP mode> Approx. 5/16 inches (0.72 cm)/second (playback only)
Recording time: SP mode 2 hours (P6-120)
Playback time: <SP mode> 2 hours (P6-120), <LP mode> 4 hours (P6-120)
Fastforward/rewind time: Approx. 6 min. 30 sec. (P6-120)
Image device: CCD (Charge Coupled Device)

Viewfinder: See the table on the next page.
Lens: See the table on the next page.
Color temperature: Auto
Minimum illumination: See the table on the next page.
Illumination range: See the table on the next page.
Recommended illumination: More than 100 lx

Output connector
Video output: Phono jack, 1 Vp-p, 75 Ω, unbalanced, sync negative
Audio output: See the table on the next page.
RFU DC OUT: Special minijack, DC 5 V
Headphones/Earphone jack: See the table on the next page.
LANC jack: Stereo mini-minijack (ø 2.5 mm)
MIC jack: See the table on the next page.

General
Power requirements: On battery mounting surface 6.0 V (battery pack), 7.5 V (AC power adaptor)
Average power consumption: See the table on the next page.
Installation: Vertically, Horizontally
Operating temperature: 32°F to 104°F (0°C to 40°C)
Storage temperature: –4°F to +140°F (–20°C to +60°C)
Dimensions: See the table on the next page.
Mass: See the table on the next page.
Microphone: See the table on the next page.

— Continued on next page —

8 VIDEO CAMERA RECORDER
CCD-TR42/TR70/TR72/TR80/TR82/TR430/TR550

Hi8 VIDEO CAMERA RECORDER
CCD-TR400/TR750

SONY

MICROFILM

Model	CCD-TR42	CCD-TR70	CCD-TR72	CCD-TR80	CCD-TR82	Notes
Viewfinder	B/W	Color	B/W	Color	B/W	Electronic viewfinder
Lens	12 x	10 x	12 x			Combined power zoom lens, Filter diameter 1 1/2 inches (37 mm), TTL autofocus system inner focus wide macro system
Focal distance f =	7/32 – 2 5/8 in (5.4 – 64.8 mm)	7/32 – 2 1/4 in (5.4 – 54 mm)	7/32 – 2 5/8 in (5.4 – 64.8 mm)			—
	—				9/32 – 3 1/8 in (6.5 – 78 mm)	at Steady Shot
	1 9/16 – 18 1/2 in (39 – 468 mm)	1 9/16 – 15 3/8 in (39 – 390 mm)	1 9/16 – 18 1/2 in (39 – 468 mm)		1 7/8 – 22 1/4 in (47 – 564 mm)	When converted into a 35-mm still camera
Minimum illuminations	2 lx				5 lx	F 1.8
Illumination range	2 – 100,000 lx				5 – 100,000 lx	—
Audio output	Monaural		2: stereo L and R		Monaural	Phono jack 7.5 dBs, (at output impedance 47 kΩ) impedance less than 2.2 kΩ
Headphones/ Earphone jack	Minijack		Stereo minijack		Minijack	—
MIC jack	Minijack		Stereo minijack		Minijack	–66 dBs low impedance with 2.5 to 3 V DC, output impedance 6.8 kΩ (ø 3.5 mm)
Average power consumption	4.9 W	5.2 W	5.0 W	5.3 W	5.4 W	Camera recording, including the viewfinder
Dimensions	4 1/2 x 4 3/8 x 8 1/4 inches (114 x 110 x 207 mm)		4 1/2 x 4 3/8 x 8 1/4 inches (114 x 110 x 208 mm)		4 1/2 x 4 3/8 x 8 1/4 inches (114 x 110 x 207 mm)	w/h/d
Mass	1 lb 15 oz (890 g)	1 lb 15 oz (880 g)	1 lb 15 oz (890 g)	1 lb 15 oz (880 g)	1 lb 15 oz (900 g)	Excluding the battery pack, lithium battery, cassette, and shoulder strap
Mass	2 lb 7 oz (1,110 g)				2 lb 8 oz (1,120 g)	Including the battery pack NP-55, lithium battery CR2025, cassette P6-120, and shoulder strap
Microphone	Monaural		Stereo		Monaural	Electret condenser microphone

— Continued on next page —

Model	CCD-TR42	CCD-TR70	CCD-TR72	CCD-TR80	CCD-TR82	Notes
Viewfinder	B/W	Color	B/W	Color	B/W	Electronic viewfinder
Lens	12 x	10 x	12 x			Combined power zoom lens, Filter diameter 1 1/2 inches (37 mm), TTL autofocus system (note focus with macro system
Focal distance f =	7/32 – 2 5/8 in (5.4 – 64.8 mm)	7/32 – 2 1/4 in (5.4 – 54 mm)	7/32 – 2 5/8 in (5.4 – 64.8 mm)			—
	—				9/32 – 3 1/8 in (6.5 – 78 mm)	at Steady Shot
	1 9/16 – 18 1/2 in (39 – 468 mm)	1 9/16 – 15 3/8 in (39 – 390 mm)	1 9/16 – 18 1/2 in (39 – 468 mm)		1 7/8 – 22 1/4 in (47 – 564 mm)	When converted into a 35-mm still camera
Minimum illuminations	2 lx				5 lx	F 1.8
Illumination range	2 – 100,000 lx				5 – 100,000 lx	—
Audio output	Monaural		2 stereo L and R		Monaural	Phono jack 7.5 dBs, (at output impedance 47 kΩ) Impedance less than 2.2 kΩ
Headphones/ Earphone jack	Minijack		Stereo minijack		Minijack	—
MIC jack	Minijack		Stereo minijack		Minijack	-66 dBs low impedance with 2.5 to 3 V DC, output impedance 6.8 kΩ (φ 3.5 mm)
Average power consumption	4.9 W	5.2 W	5.0 W	5.3 W	5.4 W	Camera recording, including the viewfinder
Dimensions	4 1/2 x 4 3/8 x 8 1/4 inches (114 x 110 x 209 mm)		4 1/2 x 4 3/8 x 8 1/4 inches (114 x 110 x 209 mm)		4 1/2 x 4 3/8 x 8 1/4 inches (114 x 110 x 207 mm)	w/h/d
Mass	1 lb 15 oz (890 g)	1 lb 15 oz (880 g)	1 lb 15 oz (890 g)	1 lb 15 oz (880 g)	1 lb 15 oz (900 g)	Including the battery pack, lithium battery, cassette, and shoulder strap
Mass	2 lb 7 oz (1,110 g)				2 lb 8 oz (1,120 g)	Including the battery pack NP-55, lithium battery CR2025, cassette P6-120, and shoulder strap
Microphone	Monaural		Stereo		Monaural	Electret condenser microphone

— Continued on next page —

AC power adaptor

Power requirements: 110 – 240 V AC*, 50/60 Hz
Power consumption: See the table below.
Output voltage: See the table below.
Application: Sony battery packs NP-55, NP-55H, NP-60D, NP-66H, NP-77H, NP-80/80D

Operating temperature: 32°F to 104°F (0°C to 40°C)
Storage temperature: –4°F to +140°F (–20°C to +60°C)
Dimensions: Approx. 4 1/8 x 1 15/16 x 2 1/2 inches (103 x 49 x 63 mm) including projecting parts and controls
Mass: See the table below.

* Canadian Standard Association (CSA) certifies 120 V AC only.

Model	AC-V25	AC-V25A	AC-V25B	Notes
Power consumption	15 W	17 W	17 W	—
Output voltage	7.5 V, 1 2 A	7.5 V, 1.5 A	7.5 V, 1.5 A	DC OUT in operating mode
Mass	10 oz (290 g)	11 oz (320 g)	10 oz (290 g)	—

Design and specifications are subject to change without notice.

Note :
We will inform you of the specification of the CCD-TR400/TR430/TR550/TR750 in the future.

SAFETY CHECK-OUT

After correcting the original service problem, perform the following safety checks before releasing the set to the customer:

1. Check the area of your repair for unsoldered or poorly-soldered connections. Check the entire board surface for solder splashes and bridges.
2. Check the interboard wiring to ensure that no wires are "pinched" or contact high-wattage resistors.
3. Look for unauthorized replacement parts, particularly transistors, that were installed during a previous repair. Point them out to the customer and recommend their replacement.
4. Look for parts which, though functioning, show obvious signs of deterioration. Point them out to the customer and recommend their replacement.
5. Check the B+ voltage to see it is at the values specified.
6. Flexible Circuit board Repairing
   - Keep the temperature of the soldering iron around 270°C during repairing.
   - Do not touch the soldering iron on the same conductor of the circuit board (within 3 times).
   - Be careful not to apply force on the conductor when soldering or unsoldering.

SAFETY-RELATED COMPONENT WARNING!!

COMPONENTS IDENTIFIED BY MARK ⚠ OR DOTTED LINE WITH MARK ⚠ ON THE SCHEMATIC DIAGRAMS AND IN THE PARTS LIST ARE CRITICAL TO SAFE OPERATION. REPLACE THESE COMPONENTS WITH SONY PARTS WHOSE PART NUMBERS APPEAR AS SHOWN IN THIS MANUAL OR IN SUPPLEMENTS PUBLISHED BY SONY.

ATTENTION AU COMPOSANT AYANT RAPPORT À LA SÉCURITÉ!

LES COMPOSANTS IDENTIFIÉS PAR UNE MARQUE ⚠ SUR LES DIAGRAMMES SCHÉMATIQUES ET LA LISTE DES PIÈCES SONT CRITIQUES POUR LA SÉCURITÉ DE FONCTIONNEMENT. NE REMPLACER CES COMPOSANTS QUE PAR DES PIÈCES SONY DONT LES NUMÉROS SONT DONNÉS DANS CE MANUEL OU DANS LES SUPPLÉMENTS PUBLIÉS PAR SONY.

AC power adaptor

Power requirements: 110 – 240 V AC*, 50/60 Hz
Power consumption: See the table below.
Output voltage: See the table below.
Application: Sony battery packs NP-55, NP-55H, NP-60D, NP-66H, NP-77H, NP-80/80D

Operating temperature: 32°F to 104°F (0°C to 40°C)
Storage temperature: –4°F to +140°F (–20°C to +60°C)
Dimensions: Approx. 4 1/8 x 1 15/16 x 2 1/2 inches (103 x 49 x 63 mm) including projecting parts and controls
Mass: See the table below.

* Canadian Standard Association (CSA) certifies 120 V AC only.

Model	AC-V25	AC-V25A	AC-V25B	Notes
Power consumption	15 W	17 W	17 W	—
Output voltage	7.5 V, 1.2 A	7.5 V, 1.5 A	7.5 V, 1.5 A	DC OUT in operating mode
Mass	10 oz (280 g)	11 oz (320 g)	10 oz (290 g)	—

Design and specifications are subject to change without notice.

Note :
We will inform you of the specification of the CCD-TR400/TR430/TR550/TR750 in the future.

SAFETY CHECK-OUT

After correcting the original service problem, perform the following safety checks before releasing the set to the customer:

1. Check the area of your repair for unsoldered or poorly-soldered connections. Check the entire board surface for solder splashes and bridges.

2. Check the interboard wiring to ensure that no wires are "pinched" or contact high-wattage resistors.

3. Look for unauthorized replacement parts, particularly transistors, that were installed during a previous repair. Point them out to the customer and recommend their replacement.

4. Look for parts which, though functioning, show obvious signs of deterioration. Point them out to the customer and recommend their replacement.

5. Check the B+ voltage to see it is at the values specified.

6. Flexible Circuit board Repairing
   - Keep the temperature of the soldering iron around 270°C during repairing.
   - Do not touch the soldering iron on the same conductor of the circuit board (within 3 times).
   - Be careful not to apply force on the conductor when soldering or unsoldering.

SAFETY-RELATED COMPONENT WARNING!!

COMPONENTS IDENTIFIED BY MARK ⚠ OR DOTTED LINE WITH MARK ⚠ ON THE SCHEMATIC DIAGRAMS AND IN THE PARTS LIST ARE CRITICAL TO SAFE OPERATION. REPLACE THESE COMPONENTS WITH SONY PARTS WHOSE PART NUMBERS APPEAR AS SHOWN IN THIS MANUAL OR IN SUPPLEMENTS PUBLISHED BY SONY.

ATTENTION AU COMPOSANT AYANT RAPPORT À LA SÉCURITÉ!

LES COMPOSANTS IDENTIFIÉS PAR UNE MARQUE ⚠ SUR LES DIAGRAMMES SCHÉMATIQUES ET LA LISTE DES PIÈCES SONT CRITIQUES POUR LA SÉCURITÉ DE FONCTIONNEMENT. NE REMPLACER CES COMPOSANTS QUE PAR DES PIÈCES SONY DONT LES NUMÉROS SONT DONNÉS DANS CE MANUEL OU DANS LES SUPPLÉMENTS PUBLIÉS PAR SONY.

【Zoom lens】

This unit employs two types of lens.
Note that the lenses are interchangeable, however their components are not.

Differentiating the lens

☛ : difference point

TYPE I (LSV-140A)	TYPE II (VCL-5412WA)
From the front of the lens 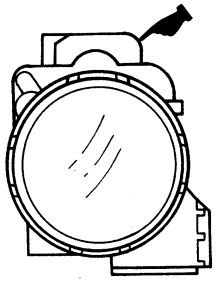	From the front of the lens 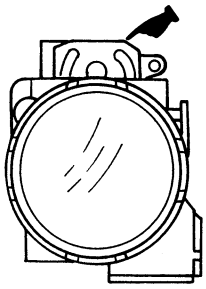
From the right side of the lens (as seen from the front) 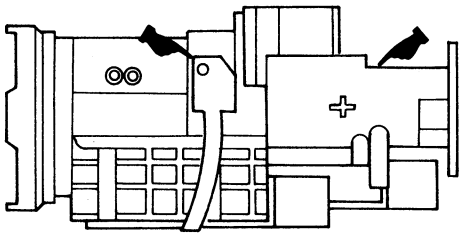	From the right side of the lens (as seen from the front) 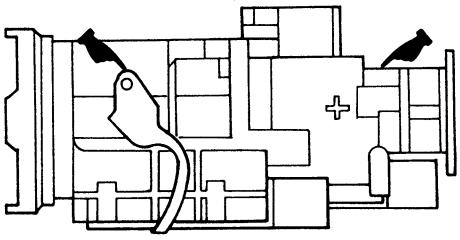

【Zoom lens】

This unit employs two types of lens.
Note that the lenses are interchangeable, however their components are not.

Differentiating the lens

: difference point

TYPE I (LSV-140A)	TYPE II (VCL-8412WA)
From the front of the lens 	From the front of the lens 
From the right side of the lens (as seen from the front) 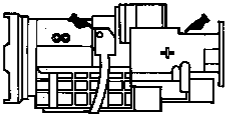	From the right side of the lens (as seen from the front) 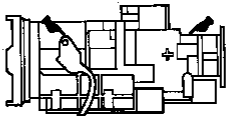

TABLE OF CONTENTS

TABLE OF CONTENTS

There is the color reproduction standard frame at the back of the book.

There is the color reproduction standard frame at the back of the book.

SERVICE NOTE

[SEMICONDUCTOR FOR CORRECTION LIST DISPLAY]

Part code and part name of the semiconductor for correction of the print board is discribed in the space of each print figure. Use this list when ordering parts.

[PARTS LOCATION DIAGRAM RELATED TO POWER SUPPLY]

The parts location diagram for the power supply which are often checked and replaced when repairing the fuse and IC link and so on. (See page 4–24, 4–35 , 4–36 and 4–78.)
This diagram is useful for repair.

[SEMICONDUCTOR LOCATION]

In this service manual, the mounted locations of the semiconductors (IC, transistor, diodes) are indicated in red in schematic diagrams. This enables to find the location on the board easily when servicing.

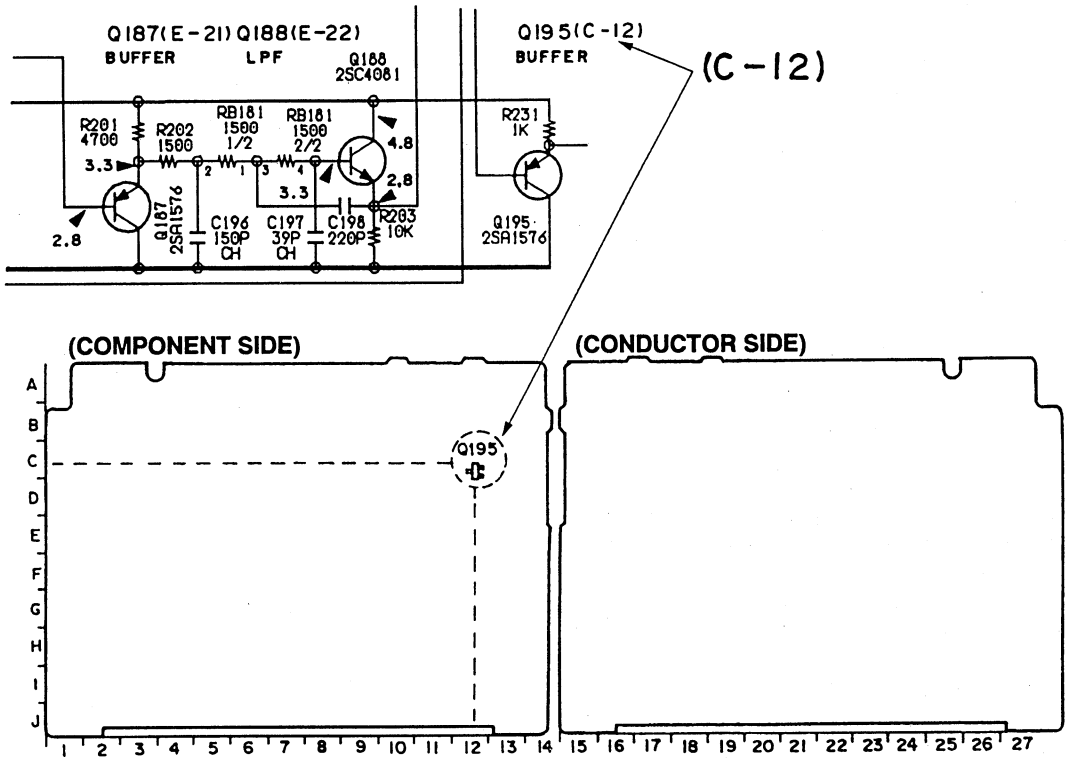

[HEAD CLEANING]

After an extended period of use the video image may become indistinct or may not appear at all during playback of a tape. The cause of this usually are dirty video heads. For remedy, cleaning of the heads is required.

Check for Head Clogs During Recording

① Use a blank tape, record a short section, then press the stop button to stop.
② Set to recording mode again.
③ If the [✖] mark is flashing in the viewfinder at this time, head clogs are occurred.

Check During Playback of a Tape

① Play back a pre-recorded tape and display the image on a TV screen.
② If there is no sound and the image is unstable, no image appears on the screen, or tape transport is unstable, head clogs are occurred.

Remedy

[Cleaning method using a cleaning tape]

- Use the Cleaning Tape. (Please follow the instructions attached to the cleaning tape.)

SERVICE NOTE

[SEMICONDUCTOR FOR CORRECTION LIST DISPLAY]

Part code and part name of the semiconductor for correction of the print board is described in the space of each print figure. Use this list when ordering parts.

[SEMICONDUCTOR LOCATION]

In this service manual, the mounted locations of the semiconductors (IC, transistor, diodes) are indicated in red in schematic diagrams. This enables to find the location on the board easily when servicing.

[PARTS LOCATION DIAGRAM RELATED TO POWER SUPPLY]

The parts location diagram for the power supply which are often checked and replaced when repairing the fuse and IC link and so on. (See page 4-24, 4-35, 4-36 and 4-78.)
This diagram is useful for repair.

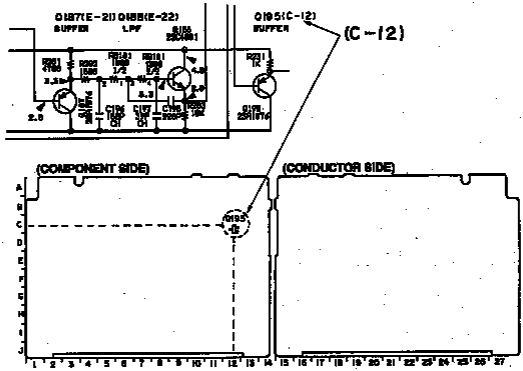

[HEAD CLEANING]

After an extended period of use the video image may become indistinct or may not appear at all during playback of a tape. The cause of this usually are dirty video heads. For remedy, cleaning of the heads is required.

Check for Head Clogs During Recording

① Use a blank tape, record a short section, then press the stop button to stop.
② Set to recording mode again.
③ If the [ ] mark is flashing in the viewfinder at this time, head clogs are occurred.

Check During Playback of a Tape

① Play back a pre-recorded tape and display the image on a TV screen.
② If there is no sound and the image is unstable, no image appears on the screen, or tape transport is unstable, head clogs are occurred.

Remedy

[Cleaning method using a cleaning tape]

- Use the Cleaning Tape. (Please follow the instructions attached to the cleaning tape.)

Before You Begin

Checking Your Model Number

The instructions in this manual are for five models listed below. Before you start reading and operating, check your model number by looking at the bottom of your camcorder. The CCD-TR42 is the model used for illustration purposes. Otherwise, the model name is indicated in the illustrations. Any differences in operation are clearly indicated in the text, for example, "CCD-TR82".
As you read through this manual, buttons and settings on the camcorder are shown in capital letters.
e.g. Set the POWER switch to CAMERA.

Types of Differences

Model Number	Audio		Viewfinder		Steady Shot	Zoom (X)
	Monaural	Stereo	B/W	Color		
CCD-TR42	○		○			12
CCD-TR70	○			○		10
CCD-TR72		○	○			12
CCD-TR80		○		○		12
CCD-TR82	○		○		○	12

Note on TV Color Systems

TV color systems differ from country to country.
To view your recordings on a TV, you need an NTSC system based TV. When you want to use a PAL-M system based TV, you will need a NTSC/PAL-M transcoder (as this is an NTSC system based camcorder). Please check the list on page 39 to see the TV color system of your country.

Note on the Supplied RFU adaptor

You can use the supplied RFU adaptor only in the country where you bought this camcorder. Since each country has its own electricity and TV color system, you may not be able to use the RFU adaptor when you use the camcorder abroad.

Precaution on Copyright

Television programs, films, video tapes, and other materials may be copyrighted. Unauthorized recording of such materials may be contrary to the provision of the copyright laws.

Precautions on Camcorder Care

- **Do no let sand get into the camcorder. When you use the camcorder on a sandy beach or dusty place, protect it from the sand or dust. Sand or dust may cause the unit to malfunction and sometimes the malfunction cannot be repaired. [a]**
- **Do not let the camcorder get wet. Keep the camcorder from rain or sea water. It may cause a malfunction and sometimes the malfunction cannot be repaired. [b]**
- Never leave the camcorder under temperatures above 140°F (60°C), such as in a car parked in the sun or under direct sunlight. **[c]**

Checking Supplied Accessories

Check that the following accessories are supplied with your camcorder.

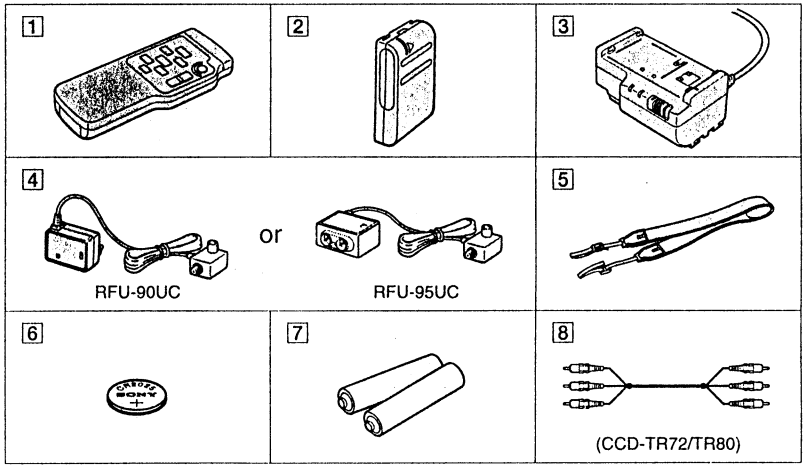

1 **Wireless remote commander (1)** (p.17, 48)

2 **NP-55 Battery pack (1)** (p.6, 33)

3 **AC-V25/V25A/V25B AC power adaptor (1)** (p.6, 19)

4 **RFU-90UC/95UC RFU adaptor (1)** (p.16)

5 **Shoulder strap (1)** (p.46)

6 **CR2025 Lithium Battery (1)** (p.30)
Already installed in the camcorder.

7 **Size AA (R16) Battery for Remote Commander (2)** (p.48)

8 **A/V connecting cable (1)** (p.16)
For CCD-TR72/TR80 only

This section is extracted from CCD-TR42/TR70/TR72/TR80/TR82 instruction manual.

This section is extracted from CCD-TR42/TR70/TR72/TR80/TR82 Instruction manual.

Before You Begin

Checking Your Model Number

The instructions in this manual are for five models listed below. Before you start reading and operating, check your model number by looking at the bottom of your camcorder. The CCD-TR82 is the model used for illustration purposes. Otherwise, the model name is indicated in the *Illustrations*. Any differences in operation are clearly indicated in the text, for example, "CCD-TR82".
As you read through this manual, buttons and settings on the camcorder are shown in capital letters, e.g. flip the POWER switch to CAMERA.

Types of Differences

Model Number	Audio		Viewfinder		Steady Shot	Zoom
	Monaural	Stereo	B/W	Color		
CCD-TR42	○		○			12
CCD-TR70	○			○		16
CCD-TR72		○	○			12
CCD-TR80		○		○		12
CCD-TR82	○		○		○	12

Note on TV Color Systems

TV color systems differ from country to country.
To view your recordings on a TV, you need an NTSC system based TV. When you want to use a PAL-M system based TV, you will need a NTSC/PAL-M transcoder (as this is an NTSC system based camcorder). Please check the list on page 39 to see the TV color system of your country.

Note on the Supplied RFU adaptor

You can use the supplied RFU adaptor only in the country where you bought this camcorder. Since each country has its own electricity and TV color system, you may not be able to use the RFU adaptor when you use the camcorder abroad.

Precaution on Copyright

Television programs, films, video tapes, and other materials may be copyrighted. Unauthorized recording of such materials may be contrary to the provision of the copyright laws.

Precautions on Camcorder Care

- Do not let sand get into the camcorder. When you use the camcorder on a sandy beach or dusty place, protect it from the sand or dust. Sand or dust may cause the unit to malfunction and sometimes the malfunction cannot be repaired. [a]
- Do not let the camcorder get wet. Keep the camcorder from rain or sea water. It may cause a malfunction and sometimes the malfunction cannot be repaired. [b]
- Never leave the camcorder under temperatures above 140°F (60°C), such as in a car parked in the sun or under direct sunlight. [c]

Checking Supplied Accessories

Check that the following accessories are supplied with your camcorder.

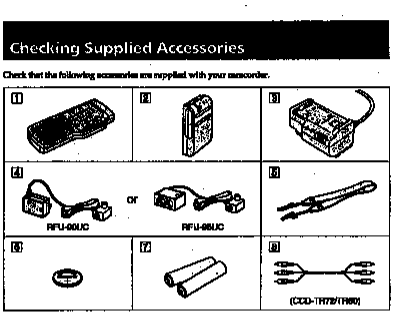

1. Wireless remote commander (1) (p.17, 44)
2. NP-55 Battery pack (1) (p.4, 35)
3. AC-V25/V25A/V25B AC power adaptor (1) (p.4, 19)
4. RFU-00UC/08UC RFU adaptor (1) (p.16)
5. Shoulder strap (1) (p.46)
6. CR2025 Lithium Battery (1) (p.30)
   Already installed in the camcorder.
7. Size AA (R14) Battery for Remote Commander (2) (p.44)
8. A/V connecting cable (1) (p.16)
   For CCD-TR72/TR80 only

Charging and Installing the Battery Pack

Before using your camcorder, you first need to charge and install the battery pack. To charge the battery pack, use the supplied AC-V25/V25A/V25B AC power adaptor.

Charging the Battery Pack

Charge the battery pack on a flat place without vibration.
(1) Connect the AC power adaptor to a wall outlet. **(2)** Align the right side of the battery pack with the line on the AC power adaptor, then slide the battery pack in the direction of the arrow. **(3)** Set the selector to CHARGE. The POWER lamp (green) and the CHARGE lamp (orange) light up. Charging begins.
When charging is completed, the CHARGE lamp goes out. Set the selector to the center position and unplug the unit from the wall outlet. Then remove the battery pack and install it on the camcorder. To stop charging, set the selector to the center position.

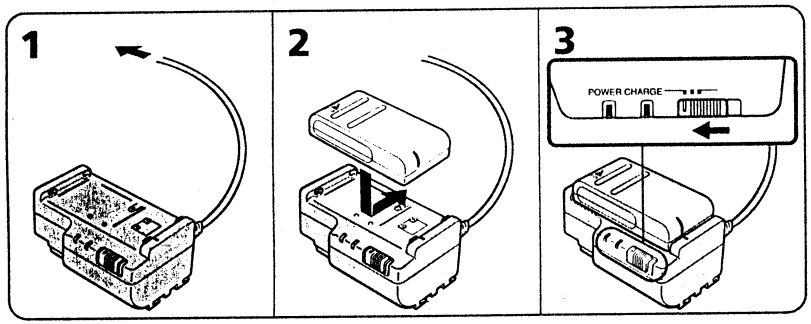

Charging Time

Battery pack	NP-55 (supplied)	NP-80 NP-80D	NP-77H	NP-66H	NP-60D	NP-55H
Charging time*	70	180	160	120	90	80

* Approximate minutes to charge an empty pack using the AC-V25/V25A/V25B (Lower temperatures require a longer charging time.)

Battery Life

CCD-TR42/TR72

Battery Pack	NP-55	NP-80/ 80D	NP-77H	NP-66H	NP-60D	NP-55H
Typical recording time**	35	95	85	65	45	40
Continuous recording time***	65	180	160	120	85	75

CCD-TR70/TR80

Battery pack	NP-55	NP-80/ 80D	NP-77H	NP-66H	NP-60D	NP-55H
Typical recording time**	30	90	80	60	40	35
Continuous recording time***	60	170	150	110	80	70

CCD-TR82

Battery pack	NP-55	NP-80/ 80D	NP-77H	NP-66H	NP-60D	NP-55H
Typical recording time**	30	85	75	55	40	35
Continuous recording time***	55	165	145	105	75	65

** Approximate minutes when recording while you repeat recording start/stop, zooming and turning the power on/off. The actual battery life may be shorter.
*** Approximate continuous recording time indoors.

Important!

Use the battery completely before re-charging!

Before you recharge the battery, make sure the battery has been used up (discharged) completely. Repeated charging while some capacity remains causes a lowering of battery capacity. However, the original battery capacity can be recovered if you use the battery completely and charge it fully again.

To use up the battery, remove the cassette and slide the POWER switch to CAMERA with the battery attached, and leave the camcorder until the indicator and the red lamp flash rapidly in the viewfinder.

Removing the Battery Pack

Slide the battery pack in the direction of the arrow.

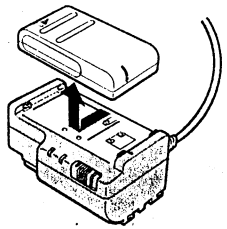

Notes on charging the battery pack

- The POWER lamp will remain lit for a while even if the battery pack is removed and the power cord is unplugged after charging the battery pack. This is normal.
- If the POWER lamp does not light, set the selector to the center position and disconnect the power cord. After about one minute, reconnect the power cord and set the selector to CHARGE again.
- You cannot operate the camcorder using the AC power adaptor while charging the battery pack.

Charging and Installing the Battery Pack

Before using your camcorder, you first need to charge and install the battery pack. To charge the battery pack, use the supplied AC-V25/V25A/V25B AC power adaptor.

Charging the Battery Pack

Charge the battery pack on a flat place without vibration.
(1) Connect the AC power adaptor to a wall outlet. (2) Align the right side of the battery pack with the line on the AC power adaptor, then slide the battery pack in the direction of the arrow. (3) Set the selector to CHARGE. The POWER lamp (green) and the CHARGE lamp (orange) light up. Charging begins.
When charging is completed, the CHARGE lamp goes out. Set the selector to the center position and unplug the unit from the wall outlet. Then remove the battery pack and install it on the camcorder. To stop charging, set the selector to the center position.

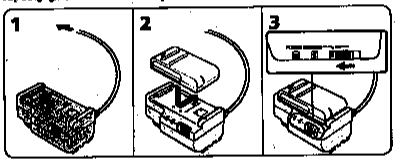

Charging Time

Battery pack	NP-55 (supplied)	NP-60/ NP-60D	NP-77H	NP-66H	NP-66D	NP-55H
Charging time*	70	180	160	120	90	80

* Approximate minutes to charge an empty pack using the AC-V25/V25A/V25B (Lower temperatures require a longer charging time.)

Battery Life

CCD-TR42/TR72

Battery Pack	NP-55	NP-60/ 60D	NP-77H	NP-66H	NP-66D	NP-55H
Typical recording time**	35	95	65	65	45	40
Continuous recording time***	45	180	140	120	85	75

CCD-TR70/TR80

Battery pack	NP-55	NP-60/ 60D	NP-77H	NP-66H	NP-66D	NP-55H
Typical recording time**	30	90	80	60	40	35
Continuous recording time***	60	170	150	110	80	70

CCD-TR82

Battery pack	NP-55	NP-60/ 60D	NP-77H	NP-66H	NP-66D	NP-55H
Typical recording time**	30	85	75	55	40	35
Continuous recording time***	55	165	145	100	75	65

** Approximate minutes when recording while you repeat recording start/stop, zooming and turning the power on/off. The actual battery life may be shorter.
*** Approximate continuous recording time indicators.

Important!

Use the battery completely before re-charging!

Before you recharge the battery, make sure the battery has been used up (discharged) completely. Repeated charging while some capacity remains causes a lowering of battery capacity. However, the original battery capacity can be recovered if you use the battery completely and charge it fully again.

To use up the battery, remove the cassette and slide the POWER switch to CAMERA with the battery attached, and leave the camcorder until the CD indicator and the red lamp flash rapidly in the viewfinder.

Removing the Battery Pack

Slide the battery pack in the direction of the arrow.

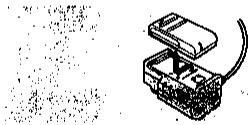

Notes on charging the battery pack

- The POWER lamp will remain lit for a while even if the battery pack is removed and the power cord is unplugged after charging the battery pack. This is normal.
- If the POWER lamp does not light, set the selector to the center position and disconnect the power cord. After about one minute, reconnect the power cord and set the selector to CHARGE again.
- You cannot operate the camcorder using the AC power adaptor while charging the battery pack.

Charging and Installing the Battery Pack

Installing the Battery Pack

(1) Lift up the viewfinder. **(2)** Align the right side of the battery pack with the white line on the camcorder, and slide the battery pack to the right.

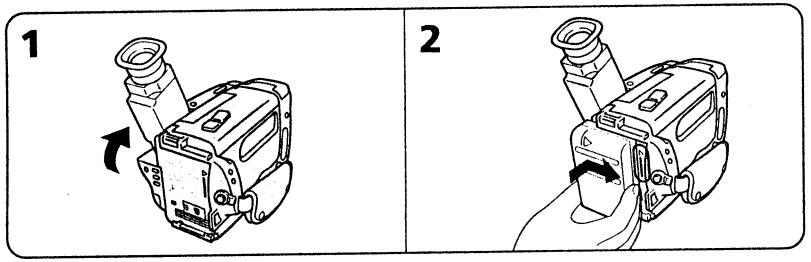

Removing the Battery Pack

(1) Lift up the viewfinder. **(2)** While pressing BATT, slide the battery pack to the left.

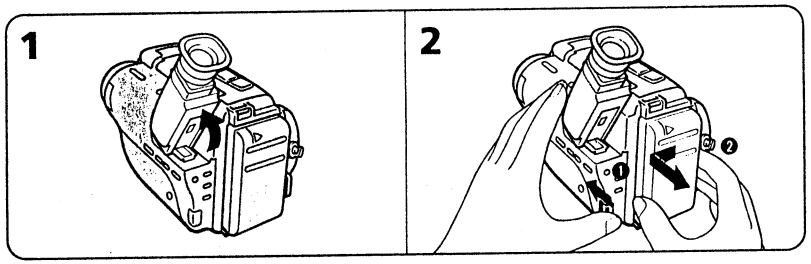

Inserting a Cassette

Make sure that a power source is installed.
(1) While sliding the lid lock, lift up the lid. Then open it. **(2)** Press EJECT. The cassette compartment automatically lifts up and opens. **(3)** Insert a cassette (not supplied) with the window facing out. **(4)** Press the PUSH mark on the cassette compartment to close it. The cassette compartment automatically goes down. **(5)** Close the lid until it locks.

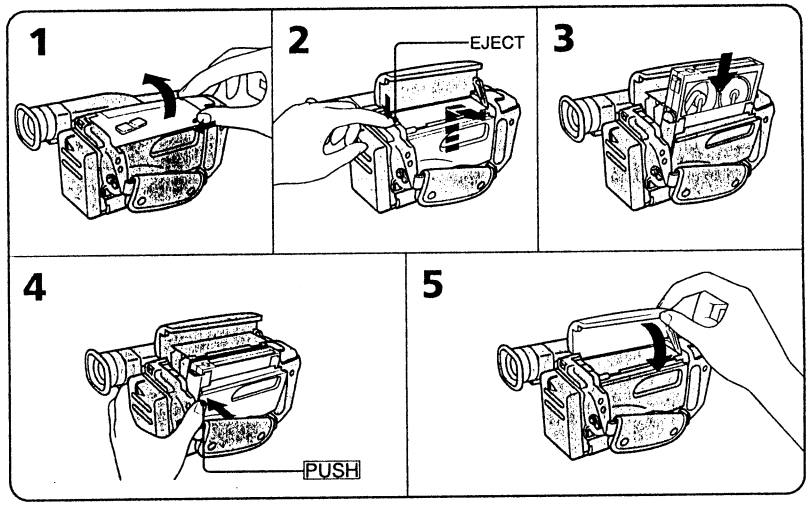

To Eject the Cassette

Press EJECT.

To Prevent Accidental Erasure

Slide the tab on the cassette to expose the red mark.
If you try to record with the red mark exposed, the and ⏏ indicators flash in the viewfinder, and you cannot record on the tape. To re-record on this tape, slide the tab back out to cover the red mark.

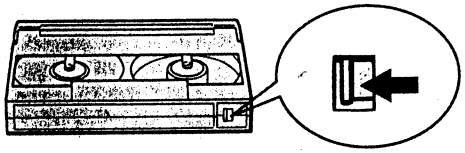

Charging and Installing the Battery Pack

Installing the Battery Pack

(1) Lift up the viewfinder. (2) Align the right side of the battery pack with the white line on the camcorder, and slide the battery pack to the right.

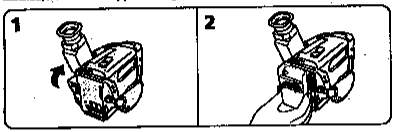

Removing the Battery Pack

(1) Lift up the viewfinder. (2) While pressing BATT, slide the battery pack to the left.

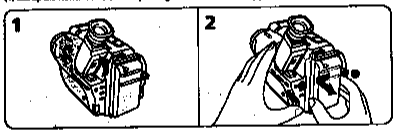

Inserting a Cassette

Make sure that a power source is installed.
(1) While sliding the lid lock, lift up the lid. Then open it. (2) Press EJECT. The cassette compartment automatically lifts up and opens. (3) Insert a cassette (not supplied) with the window facing out. (4) Press the PUSH mark on the cassette compartment to close it. The cassette compartment automatically goes down. (5) Close the lid until it locks.

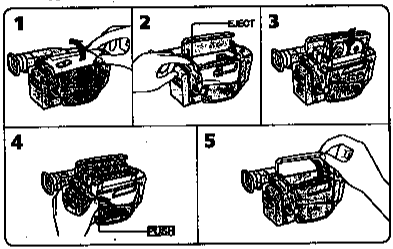

To Eject the Cassette

Press EJECT.

To Prevent Accidental Erasure

Slide the tab on the cassette to expose the red mark.
If you try to record with the red mark exposed, the ⊞ and ⊞ indicators flash in the viewfinder, and you cannot record on the tape. To re-record on this tape, slide the tab back out to cover the red mark.

Adjusting the Viewfinder Lens

Before you use the camcorder for the first time or after someone else has used it, focus the viewfinder lens. Make sure that the power source is connected to the camcorder.
(1) While pressing the small green button on the POWER switch, slide it to CAMERA. **(2)** Turn STANDBY up. **(3)** Turn the viewfinder lens adjustment ring so that the indicators in the viewfinder come into sharp focus.

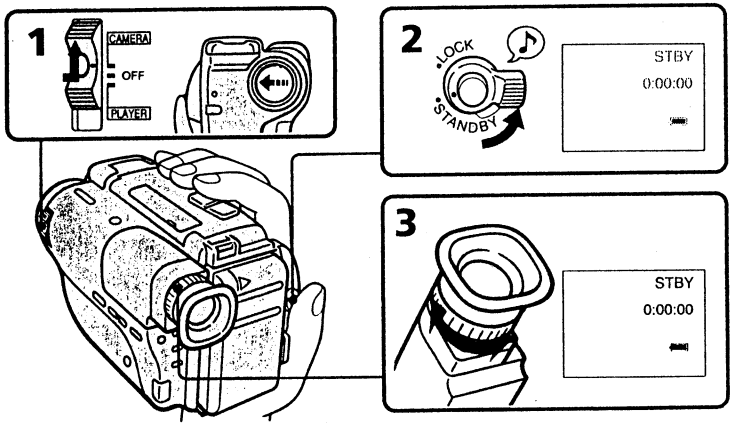

Basic Operations

Camera Recording

Make sure that a power source and a cassette is inserted. The date is automatically recorded for 10 seconds after you start recording (AUTO DATE feature). This feature works only once a day. You can hear the beep sound to confirm your operation. Before you record one-time events, you may want to make a trial recording to make sure that you are using the camcorder correctly.
(1) While pressing the small green button on the POWER switch, slide it to CAMERA. **(2)** Turn STANDBY up. **(3)** Press START/STOP. The camcorder starts recording and the "REC" indicator apperars in the viewfinder.

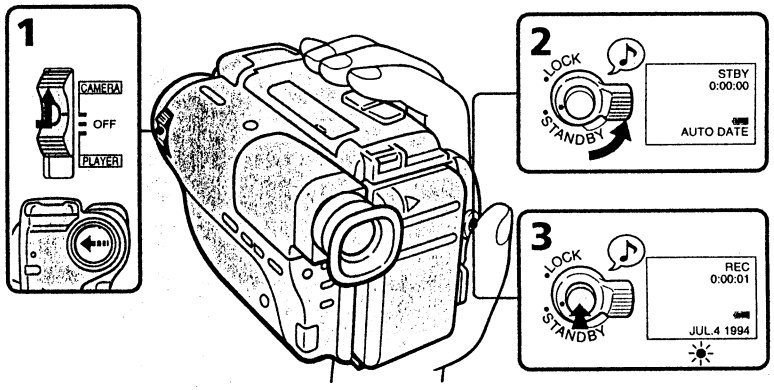

Note on beep sound
As indicated with ♪ in the illustrations, a beep sounds when you turn the power on or when you start recording and two beeps sound when you stop recording, confirming the operation. Several beeps also sound as a warning of any unusual condition of the camcorder (p.51). Note that the beep sound is not recorded on the tape. If you do not want to hear the beep sound, select "OFF" in the menu system (p.25).

To Stop Recording Momentarily [a]

Press START/STOP again. The "STBY" indicator appears in the viewfinder (**Standby mode**).

To Finish Recording [b]

Press START/STOP. Turn STANDBY down, and set the POWER switch to OFF.
Then, eject the cassette (p.9).

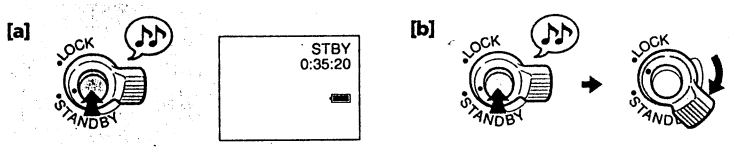

See the next page for further information.

Adjusting the Viewfinder Lens

Before you use the camcorder for the first time or after someone else has used it, focus the viewfinder lens. Make sure that the power source is connected to the camcorder.
(1) While pressing the small green button on the POWER switch, slide it to CAMERA. (2) Turn STANDBY up. (3) Turn the viewfinder lens adjustment ring so that the indicators in the viewfinder come into sharp focus.

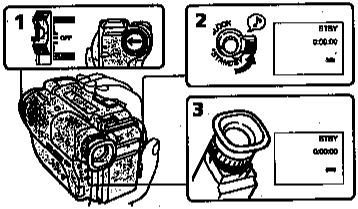

Basic Operations

Camera Recording

Make sure that a power source and a cassette is inserted. The date is automatically recorded for 10 seconds after you start recording (AUTO DATE feature). This feature works only once a day. You can hear the beep sound to confirm your operation. Before you record one-time events, you may want to make a trial recording to make sure that you are using the camcorder correctly.
(1) While pressing the small green button on the POWER switch, slide it to CAMERA. (2) Turn STANDBY up. (3) Press START/STOP. The camcorder starts recording and the "REC" indicator appears in the viewfinder.

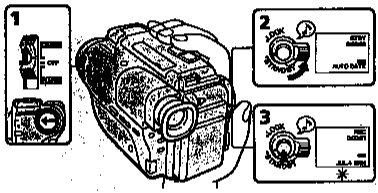

Note on beep sound
As indicated with ♪ in the illustrations, a beep sounds when you turn the power on or when you start recording and two beeps sound when you stop recording, confirming the operation. Several beeps also sound as a warning of any unusual condition of the camcorder (p.51). Note that the beep sound is not recorded on the tape. If you do not want to hear the beep sound, select "OFF" in the sound system (p.25).

To Stop Recording Momentarily [a]
Press START/STOP again. The "STBY" indicator appears in the viewfinder (Standby mode).

To Finish Recording [b]
Press START/STOP. Turn STANDBY down, and set the POWER switch to OFF.
Then, eject the cassette (p.9).

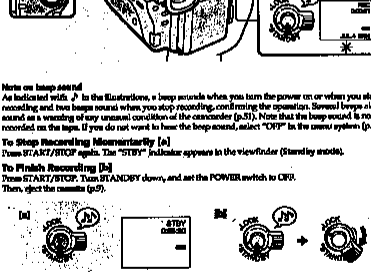

Note on Standby mode
If you leave the camcorder for 5 minutes or more with a cassette inserted in Standby mode, the camcorder goes off automatically. This prevents wearing down the battery and wearing out the tape. To resume Standby mode, turn STANDBY down once and turn it up again. To start recording, press START/STOP.

Note on recording
When you record from the beginning of the tape, run the tape for about 15 seconds before actual recording. This prevents the camcorder from missing any start-up scenes when you play back the tape. You can record tapes in SP (standard play) mode only.

Note on the tape counter
The tape counter indicates the recording or playback time. Use it as a guide. There will be a time lag of several seconds from the actual time. To set the counter to zero, press COUNTER RESET located below the viewfinder. You can know the approximate remaining tape by the remaining tape indicator (p.50).

Note on the AUTO DATE feature
The clock is set to the East Coast Standard Time at the factory. You can reset the clock (p.31).
You can change the AUTO DATE setting by selecting ON or OFF in the menu system (p.25).
- The AUTO DATE feature works once a day. However, the date may automatically appear more than once a day when:
  - you reset the date and time.
  - you eject and insert the tape again.
  - you stop recording within 10 seconds.
  - you set AUTO DATE to OFF once and set to ON in the menu system.
- Once the AUTO DATE feature turns off the date display 10 seconds after the start of recording, the date and time are displayed as follows:
  - if the date display setting has been made, the date is displayed.
  - if the time display setting has been made, the time is displayed.
  - if neither display setting has been made, nothing is displayed.

When moving from indoors to outdoors (or vice versa)
Turn STANDBY up and point the camcorder at a white object for about 15 seconds so that the white balance is properly adjusted.

Using the Zoom Feature

Zooming is a recording technique that lets you change the size of the subject in the scene. For more professional-looking recordings, use the zoom sparingly.
T side: for telephoto (subject appears closer)
W side: for wide-angle (subject appears farther away)

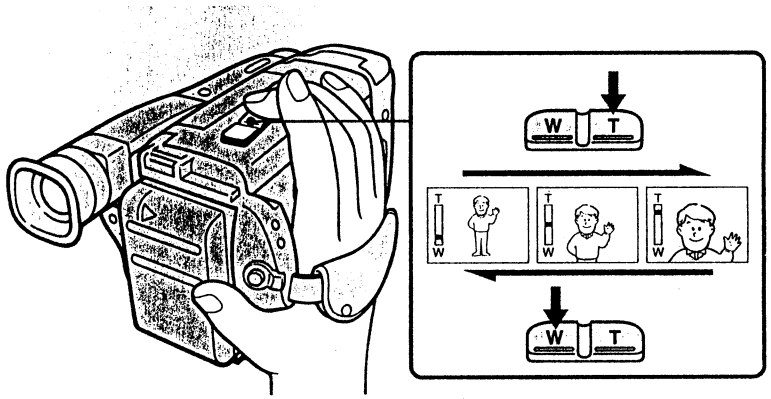

Zooming Speed
Press the power zoom button firmly for a high-speed zoom. Press it softly for a relatively slow zoom.

When you shoot a subject using a telephoto zoom
If you cannot get a sharp focus while in extreme telephoto zoom, press the W side of the power zoom button until the focus is sharp.
You can shoot a subject that is at least 3.3 feet (about 1 m) away from the lens surface in the telephoto position, or 1/2 inches (about 1cm) in the wide-angle position.

Note on Standby mode
If you leave the camcorder for 5 minutes or more with a cassette inserted in Standby mode, the camcorder goes off automatically. This prevents wasting down the battery and wearing out the tape. To resume Standby mode, turn STANDBY down once and turn it up again. To start recording, press START/STOP.

Note on recording
When you record from the beginning of the tape, run the tape for about 15 seconds before actual recording. This prevents the camcorder from making any start-up noises when you play back the tape. You can record tapes in SP (standard play) mode only.

Note on the tape counter
The tape counter indicates the recording or playback time. Use it as a guide. There will be a time lag of several seconds from the actual time. To set the counter to zero, press COUNTER RESET located below the viewfinder. You can know the approximate remaining tape by the remaining tape indicator (p.33).

Note on the AUTO DATE feature
The clock is set to the East Coast Standard Time at the factory. You can reset the clock (p.31).
You can change the AUTO DATE setting by selecting ON or OFF in the menu system (p.28).
- The AUTO DATE feature works once a day. However, the date may automatically appear more than once a day when:
  - you reset the date and time.
  - you eject and insert the tape again.
  - you stop recording within 10 seconds.
  - you set AUTO DATE to OFF once and set to ON in the menu system.
- Once the AUTO DATE feature turns off the date display 10 seconds after the start of recording, the date and time are displayed as follows:
  - if the date display setting has been made, the date is displayed.
  - if the time display setting has been made, the time is displayed.
  - if neither display setting has been made, nothing is displayed.

When moving from indoors to outdoors (or vice versa)
Turn STANDBY up and point the camcorder at a white object for about 15 seconds so that the white balance is properly adjusted.

Using the Zoom Function

Zooming is a recording technique that lets you change the size of the subject in the scene. For more professional-looking recordings, use the zoom sparingly.
T side: for telephoto (subject appears closer)
W side: for wide-angle (subject appears farther away)

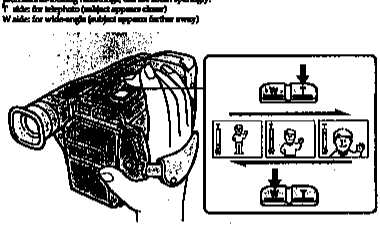

Zooming Speed
Press the power zoom button firmly for a high-speed zoom. Press it softly for a relatively slow zoom.

When you shoot a subject using a telephoto zoom
If you cannot get a sharp focus while in extreme telephoto zoom, press the W side of the power zoom button until the focus is sharp.
You can shoot a subject first at at least 3.3 feet (about 1 m) away from the lens surface in the telephoto position, or 1/2 inches (about 1cm) in the wide-angle position.

Hints for Better Shooting

For hand-held shots, you'll get better results holding the camcorder according to the following suggestions:

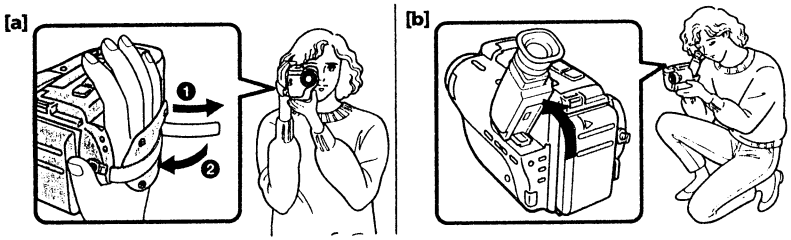

- Hold the camcorder firmly and secure it with the grip strap so that you can easily manipulate the controls with your thumb. **[a]**
- Place your right elbow against your side.
- Place your left hand under the camcorder to support it.
- Place your eye firmly against the viewfinder eyecup.
- Use the viewfinder frame as a guide to determine the horizontal plane.
- You can also record in a low position to get an interesting recording angle. Turn the viewfinder up for recording from a low position. **[b]**

Place the camcorder on a flat surface or use a tripod.
Try placing the camcorder on a table top or any other flat surface of suitable height. If you have a tripod for a still camera, you can also use it with the camcorder (p.46). Make sure the tripod screw is shorter than 9/32 in (6.5mm).

To Use the Viewfinder as a Sports Finder [c]

With the sports finder, you can monitor the picture while your eye is at a distance from the eyecup. The sports finder is convenient when moving around to shoot scenes.
While sliding the viewfinder release knob to the left, flip open the viewfinder.

Note on the color viewfinder (for CCD-TR70/TR80)
You may find it difficult to use the color viewfinder as the sports finder for recording in light location.

Cautions on the viewfinder
- Do not pick up the camcorder by the viewfinder. **[d]**
- Do not place the camcorder so as to point the viewfinder toward the sun. The inside of the viewfinder may be deformed. Be careful in placing the camcorder under sunlight or at the window. **[e]**

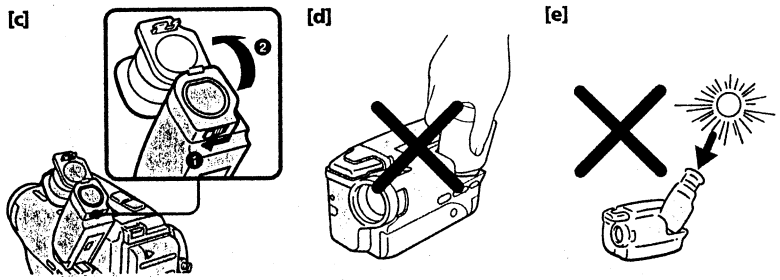

Checking the Recorded Picture

Using EDITSEARCH, you can review the last recorded scene or check the recorded picture in the viewfinder.
(1) While pressing the small green button on the POWER switch, slide it to CAMERA.
(2) Turn STANDBY up. **(3)** Press EDITSEARCH. Press the – (⊖) side momentarily, the last few seconds of the recorded portion plays back (**Rec Review**).
Keep pressing EDITSEARCH to play back the last recorded portion (**Edit Search**).
+ side: to view the forward playback picture
– side: to view the reverse playback picture

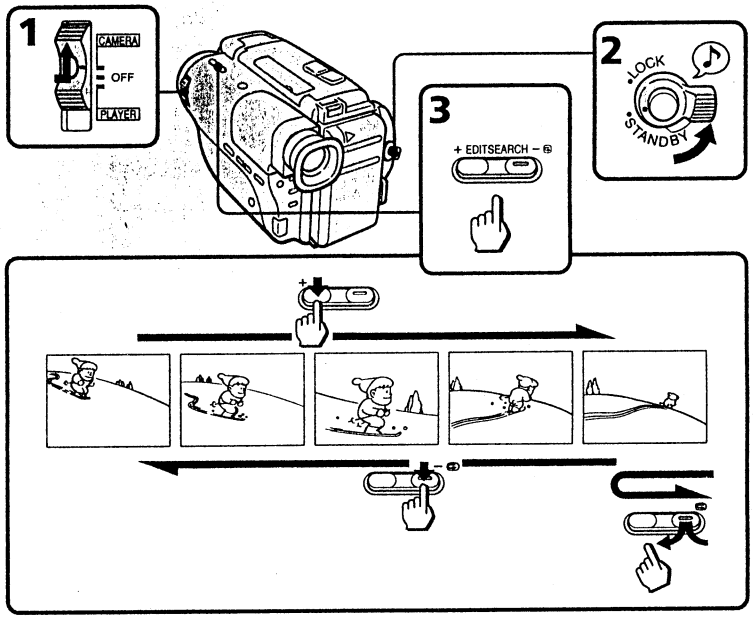

To Stop Playback

Release EDITSEARCH.

To Begin Re-recording

Press START/STOP. Re-recording begins from the point you released EDITSEARCH. Provided you do not eject the tape, the transition between the last scene you recorded and the next scene you record will be smooth.

Monitoring the Sound While Viewing the Playback Picture in the Viewfinder

Connect earphone/headphones (not supplied) to the ⊙/∩ jack. Play back the tape in PLAYER mode (p.17).

Hints for Better Shooting

For hand-held shots, you'll get better results holding the camcorder according to the following suggestions:

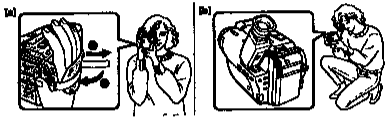

- Hold the camcorder firmly and secure it with the grip strap so that you can easily manipulate the controls with your thumb. [a]
- Place your right elbow against your side.
- Place your left hand under the camcorder to support it.
- Place your eye firmly against the viewfinder eyecup.
- Use the viewfinder frame as a guide to determine the horizontal plane.
- You can also record in a low position to get an interesting recording angle. Turn the viewfinder up for recording from a low position. [b]

Place the camcorder on a flat surface or use a tripod.
Try placing the camcorder on a table top or any other flat surface of suitable height. If you have a tripod for a still camera, you can also use it with the camcorder (p.46). Make sure the tripod screw is shorter than 9/32 in (6.5mm).

To Use the Viewfinder as a Sports Finder [c]
With the sports finder, you can monitor the picture while your eye is at a distance from the eyecup. The sports finder is convenient when moving around to shoot scenes.
While sliding the viewfinder release knob to the left, flip open the viewfinder.

Note on the color viewfinder (for CCD-TR75/TR80)
You may find it difficult to use the color viewfinder as the sports finder for recording in light location.

Cautions on the viewfinder
- Do not pick up the camcorder by the viewfinder. [d]
- Do not place the camcorder so as to point the viewfinder toward the sun. The inside of the viewfinder may be deformed. Be careful in placing the camcorder under sunlight or at the window. [e]

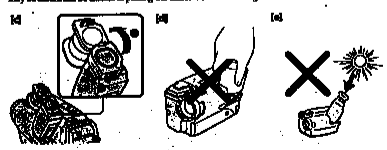

Checking the Recorded Picture

Using EDITSEARCH, you can review the last recorded scene or check the recorded picture in the viewfinder.
[1] While pressing the small green button on the POWER switch, slide it to CAMERA.
[2] Turn STANDBY up. [3] Press EDITSEARCH. Press the – (REV) side momentarily, the last few seconds of the recorded portion plays back (Rec Review).
Keep pressing EDITSEARCH to play back the last recorded portion (Edit Search).
- slide to view the forward playback picture
- slide to view the reverse playback picture

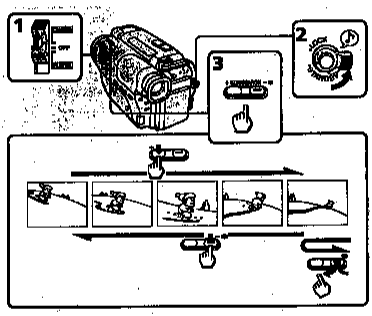

To Stop Playback
Release EDITSEARCH.

To Begin Re-recording
Press START/STOP. Re-recording begins from the point you released EDITSEARCH. Provided you do not eject the tape, the transition between the last scene you recorded and the next scene you record will be smooth.

Monitoring the Sound While Viewing the Playback Picture in the Viewfinder
Connect earphone/headphones (not supplied) to the Ω/🎧 jack. Play back the tape in PLAYBACK mode (p.17).

Connections for Playback

You can use this camcorder as a VCR by connecting it to your TV for playback. There are some ways to connect your camcorder as shown below. It is recommended to use the house current as the power source (p.19).

Connecting to a TV without Video/Audio Input Jacks

Connect the camcorder to the TV using the supplied RFU adaptor. Set the channel selector on the RFU adaptor and your TV channel to VHF channel CH3 or CH4, whichever is not active in your area. With this connection, the sound is monaural.

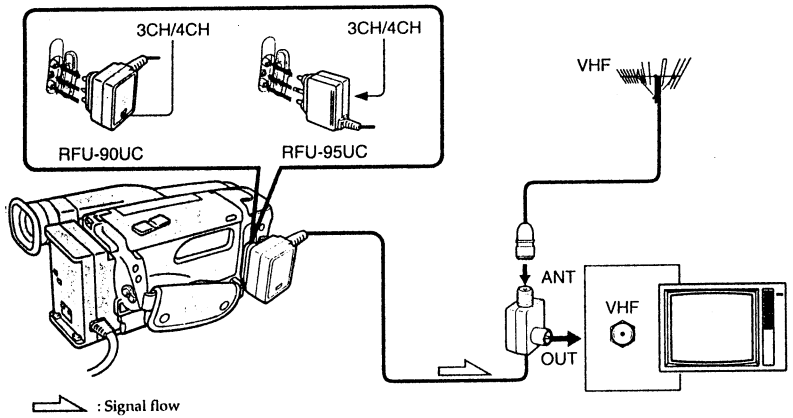

Connecting to a TV with Video/Audio Input Jacks or VCR

For Stereo Models (CCD-TR72/TR80)

Connect the camcorder to your TV by using the supplied connecting cable. Set the TV/VCR selector to VCR on the TV. When connecting the camcorder to VCR, set the input selector on the VCR to LINE.

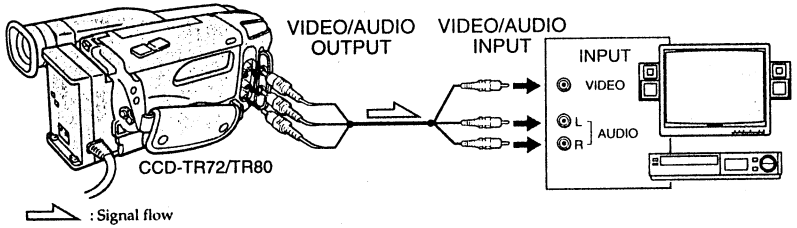

If your TV or VCR is monaural type, connect only the white plug for audio on both the camcorder and the TV or the VCR. With this connection, the sound is monaural.

For Monaural Models (CCD-TR42/TR70/TR82)

Connect the camcorder to your TV by using a monarual A/V connecting cable (not supplied). Set the TV/VCR selector to VCR on the TV. When connecting the camcorder to VCR, set the input selector on the VCR to LINE.

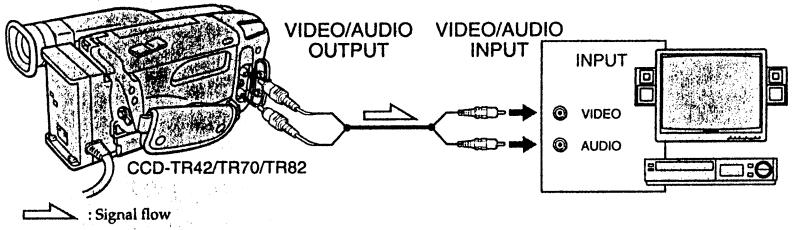

Playing Back a Tape

You can monitor the playback picture in the viewfinder. You can also monitor on the TV screen, after connecting the camcorder to the TV/VCR (p.16). You can control playback using the supplied Remote Commander (p.49).

(1) While pressing the small green button on the POWER switch, slide it to PLAYER. **(2)** Insert the recorded tape with the window facing out. **(3)** Press ▷. Playback starts.

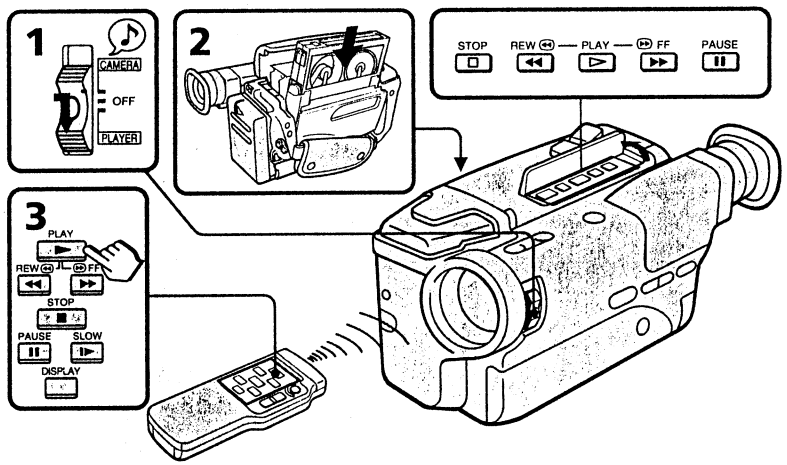

See the next page for further information.

Connections for Playback

You can use this camcorder as a VCR by connecting it to your TV for playback. There are some ways to connect your camcorder as shown below. It is recommended to use the house current as the power source (p.19).

Connecting to a TV without Video/Audio Input Jacks

Connect the camcorder to the TV using the supplied RFU adaptor. Set the channel selector on the RFU adaptor and your TV channel to VHF channel CH3 or CH4, whichever is not active in your area. With this connection, the sound is monaural.

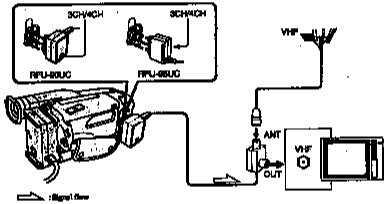

Connecting to a TV with Video/Audio Input Jacks or VCR

For Stereo Models (CCD-TR77/TR80)

Connect the camcorder to your TV by using the supplied connecting cable. Set the TV/VCR selector to VCR on the TV. When connecting the camcorder to VCR, set the input selector on the VCR to LINE.

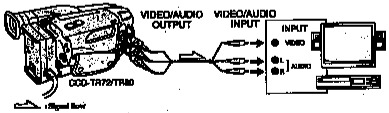

If your TV or VCR is monaural type, connect only the white plug for audio on both the camcorder and the TV or the VCR. With this connection, the sound is monaural.

For Monaural Models (CCD-TR42/TR70/TR82)

Connect the camcorder to your TV by using a monaural A/V connecting cable (not supplied). Set the TV/VCR selector to VCR on the TV. When connecting the camcorder to VCR, set the input selector on the VCR to LINE.

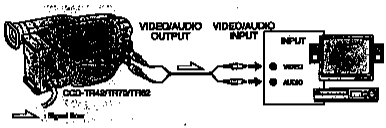

Playing Back a Tape

You can monitor the playback picture in the viewfinder. You can also monitor on the TV screen, after connecting the camcorder to the TV/VCR (p.16). You can control playback using the supplied Remote Commander (p.49).

(1) While pressing the small green button on the POWER switch, slide it to PLAYER. (2) Insert the recorded tape with the window facing out. (3) Press ▷. Playback starts.

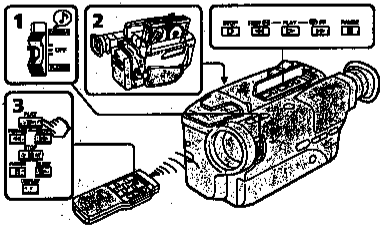

See the next page for further information.

Playing Back a Tape

To stop playback, press □.
To rewind the tape, press ◀◀.
To advance the tape rapidly, press ▶▶.

Various Playback Modes

To view a still picture (playback pause)
Press ❚❚ during playback. To resume playback, press ❚❚ or ▷.

To locate a scene (Picture Search)
Keep pressing ◀◀ or ▶▶ during playback. To resume normal playback, release the button.

To monitor the high-speed picture during fastforward or rewind (Skip Scan)
Keep pressing ◀◀ while rewinding or ▶▶ while advancing the tape. To resume normal playback, press ▷.

To view the picture in a sequence of stop-motion images
Press EDITSEARCH in playback pause mode. If you keep pressing EDITSEARCH, you can view the picture playback in the forward (+) or reverse (–) direction.

To view the picture at 1/5 speed (Slow Playback) (only with the Remote Commander)
Press ❚▶ on the Remote Commander during playback. To resume normal playback, press ▷. If slow playback lasts for about 1 minute, it shifts to normal speed automatically.

Note on playback
- Streaks appear and the sound is muted in the various playback modes.
- When still picture mode lasts for 5 minutes or more, the camcorder automatically enters stop mode.

To display the viewfinder screen indicators on the TV
Press DISPLAY on the Remote Commander.
To erase the indicators, press DISPLAY again.

To select the monitor sound – For stereo models (CCD-TR72/TR80)
Change the"HiFi SOUND" mode setting in the menu system (p.25)

Advanced Operations

Using Alternate Power Sources

You can choose any of the following power sources for your camcorder: battery pack (P.6), house current, and 12/24 V car battery. Choose the appropriate power source depending on where you want to use your camcorder.

Place	Power source	Accessory to be used
Indoors	House current	AC power adaptor AC-V25/V25A/V25B (supplied), AC-S10, AC-V55
Outdoor	Battery pack	Battery pack NP-55 (supplied), NP-80, NP-80D, NP-77H, NP-66H, NP-60D, NP-55H
In the car	12 V or 24 V car battery	DC pack DCP-77

Using House Current

To use the supplied AC-V25/A25A/V25B AC power adaptor:
(1) Lift up the viewfinder. **(2)** Connect the AC power cord to a wall outlet. Connect the bottom of the AC power adaptor to the battery mounting surface of the camcorder. **(3)** Set the selector to VTR (DC OUT).

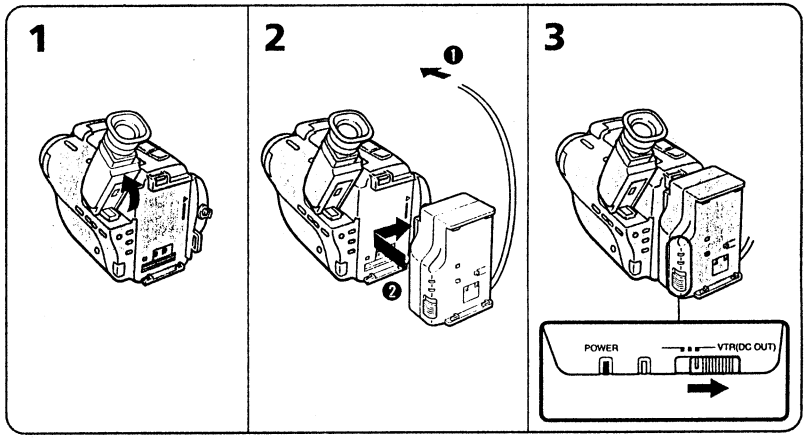

Notes on the POWER lamp
- The POWER lamp will remain lit for a while even if the unit is unplugged after use. This is normal.
- If the POWER lamp does not light, set the selector to the center position and disconnect the power cord. After about one minute, reconnect the power cord and set the selector to VTR (DC OUT) again.

To remove the adapter
The adaptor is removed in the same way as the battery pack. (p.8)

Playing Back a Tape

To stop playback, press □.
To rewind the tape, press ◀◀.
To advance the tape rapidly, press ▶▶.

Various Playback Modes

To view a still picture (playback pause)
Press II during playback. To resume playback, press II or ▷.

To locate a scene (Picture Search)
Keep pressing ◀◀ or ▶▶ during playback. To resume normal playback, release the button.

To monitor the high-speed picture during fastforward or rewind (Skip Scan)
Keep pressing ◀◀ while rewinding or ▶▶ while advancing the tape. To resume normal playback, press ▷.

To view the picture in a sequence of stop-motion images
Press SLOWSEARCH in playback pause mode. If you keep pressing SLOWSEARCH, you can view the picture playback in the forward (+) or reverse (-) direction.

To view the picture at 1/5 speed (Slow Playback) (only with the Remote Commander)
Press ▷ on the Remote Commander during playback. To resume normal playback, press ▷. If slow playback lasts for about 1 minute, it shifts to normal speed automatically.

Notes on playback
- **Streaks appear and the sound is muted in the various playback modes.**
- **When still picture mode lasts for 5 minutes or more, the camcorder automatically enters stop mode.**

To display the viewfinder screen indicators on the TV
Press DISPLAY on the Remote Commander.
To erase the indicators, press DISPLAY again.

To select the monitor sound – For stereo models (CCD-TR72/TR80)
Change the "HIFI SOUND" mode setting in the menu system (p.29)

Using Alternate Power Sources

You can choose any of the following power sources for your camcorder: battery pack (P.6), house current, and 12/24 V car battery. Choose the appropriate power source depending on where you want to use your camcorder.

Place	Power source	Accessory to be used
Indoors	House current	AC power adaptor AC-V25/V25A/V25S (supplied), AC-E10, AC-V35
Outdoor	Battery pack	Battery pack NP-58 (supplied), NP-60, NP-80D, NP-77H, NP-66H, NP-66D, NP-55H
In the car	12 V or 24 V car battery	DC pack DCR-97

Using House Current

To use the supplied AC-V25/ A25A/V25S AC power adaptor:
(1) Lift up the viewfinder. (2) Connect the AC power cord to a wall outlet. Connect the bottom of the AC power adaptor to the battery mounting surface of the camcorder. (3) Set the selector to VTR (DC OUT).

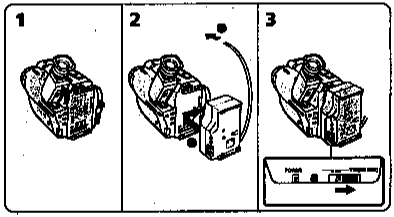

Notes on the POWER lamp
- **The POWER lamp will remain lit for a while even if the unit is unplugged after use. This is normal.**
- **If the POWER lamp does not light, set the selector to the center position and disconnect the power cord. After about one minute, reconnect the power cord and set the selector to VTR (DC OUT) again.**

To remove the adaptor
The adaptor is removed in the same way as the battery pack. (p.8)

Using Alternate Power Sources

Using a Car Battery

Use the DCP-77 DC pack (not supplied). Connect the cord of the DC pack to the cigarette lighter socket of a car (12 V or 24 V). Connect the DC pack to the battery mounting surface of the camcorder.

To remove the DC pack
The DC pack is removed in the same way as the battery pack. (p.8)

Options for Charging the Battery Pack

- AC-S10 AC power adaptor:
  You can charge a battery pack whether it is used up or not with this adaptor because it has a discharging function.
- BC-S10 portable battery charger (ideal for travel):
  You can charge a battery pack on 100 — 240 V AC current.

Recording with the Date or Time

Before you start recording, press DATE or TIME. You can record the date or time displayed in the viewfinder with the picture. You cannot record the date and time at the same time. Except for the date or time indicator, no indicator in the viewfinder is recorded.
The clock is set to the East Coast Standard Time at the factory.

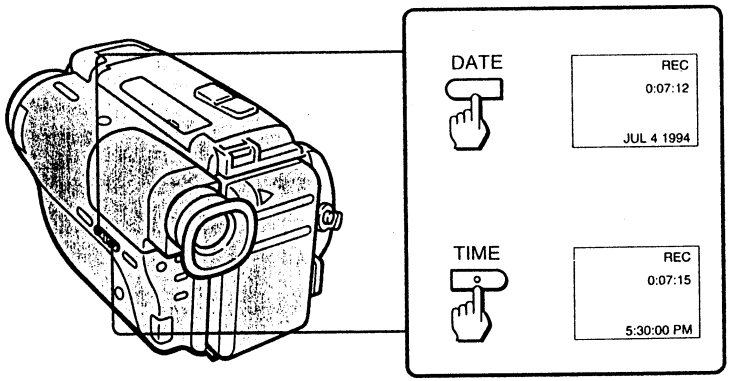

To Stop Recording with the Date or Time
Press DATE or TIME again. Recording continues.

Shooting with Backlighting

When you shoot a subject with the light source behind the subject or a subject with a light background, use the BACK LIGHT.

Press BACK LIGHT. The indicator appears inside the viewfinder.

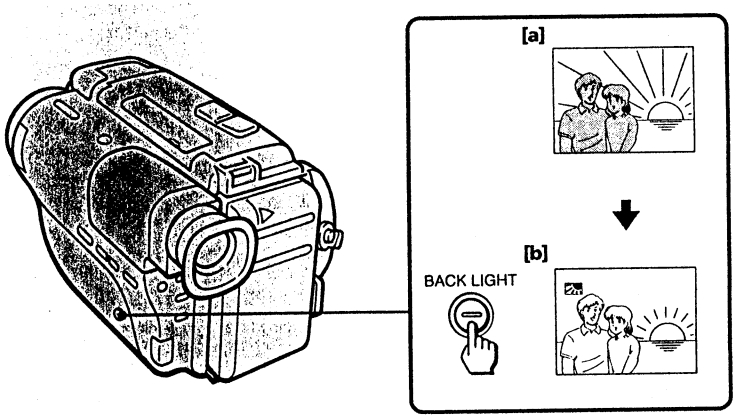

[a] Subject is too dark because of backlight.
[b] Subject becomes bright with backlight compensation.

After shooting
Press BACK LIGHT again to let the indicator go out under normal lighting condition. Otherwise, the picture will be too bright under normal lighting condition.

This function is also effective under following conditions:
- On the snow e.g. at the ski resort
- At the beach under strong sunshine
- A subject with a light source nearby or a mirror reflecting light
- A white subject against a white background. Especially when you shoot a person wearing shiny clothes made of silk or synthetic fiber, his or her face tends to become dark if you do not use this function.

Using a car battery

Use the DCP-77 DC pack (not supplied). Connect the cord of the DC pack to the cigarette lighter socket of a car (12 V or 24 V). Connect the DC pack to the battery mounting surface of the camcorder.

To remove the DC pack
The DC pack is removed in the same way as the battery pack. (p.8)

Notes for Charging the Battery Pack

- AC-510 AC power adaptor
  You can charge a battery pack whether it is used up or not with this adaptor because it has a discharging function.
- BC-510 portable battery charger (ideal for travel)
  You can charge a battery pack on 100 — 240 V AC current.

Recording with the Date or Time

Before you start recording, press DATE or TIME. You can record the date or time displayed in the viewfinder with the picture. You cannot record the date and time at the same time. Except for the date or time indicator, no indicator in the viewfinder is recorded.

The clock is set to the East Coast Standard Time at the factory.

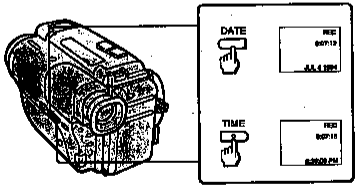

To Stop Recording with the Date or Time
Press DATE or TIME again. Recording continues.

Shooting with Backlighting

When you shoot a subject with the light source behind the subject or a subject with a light background, use the BACK LIGHT.

Press BACK LIGHT. The ☒ indicator appears inside the viewfinder.

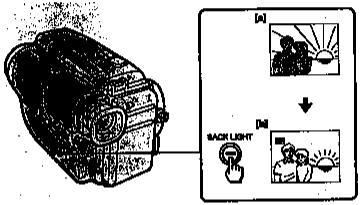

[a] Subject is too dark because of backlight.
[b] Subject becomes bright with backlight compensation.

After shooting
Press BACK LIGHT again to let the ☒ indicator go out under normal lighting condition. Otherwise, the picture will be too bright under normal lighting condition.

This function is also effective under following conditions:
- On the snow e.g. at the ski resort
- At the beach under strong sunshine
- A subject with a light source nearby or a mirror reflecting light
- A white subject against a white background. Especially when you shoot a person wearing shiny clothes made of silk or synthetic fiber, his or her face tends to become dark if you do not use this function.

SECTION 2
DISASSEMBLY

2-1. REMOVAL OF F PANEL BLOCK

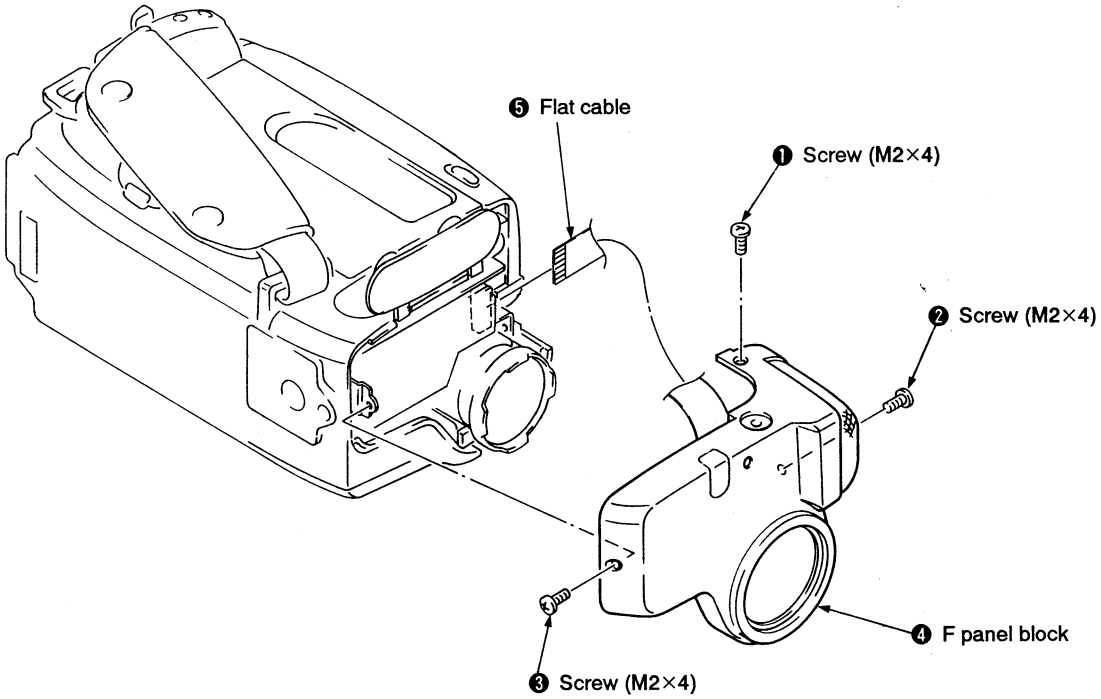

2-2. REMOVAL OF CASSETTE LID ASSEMBLY

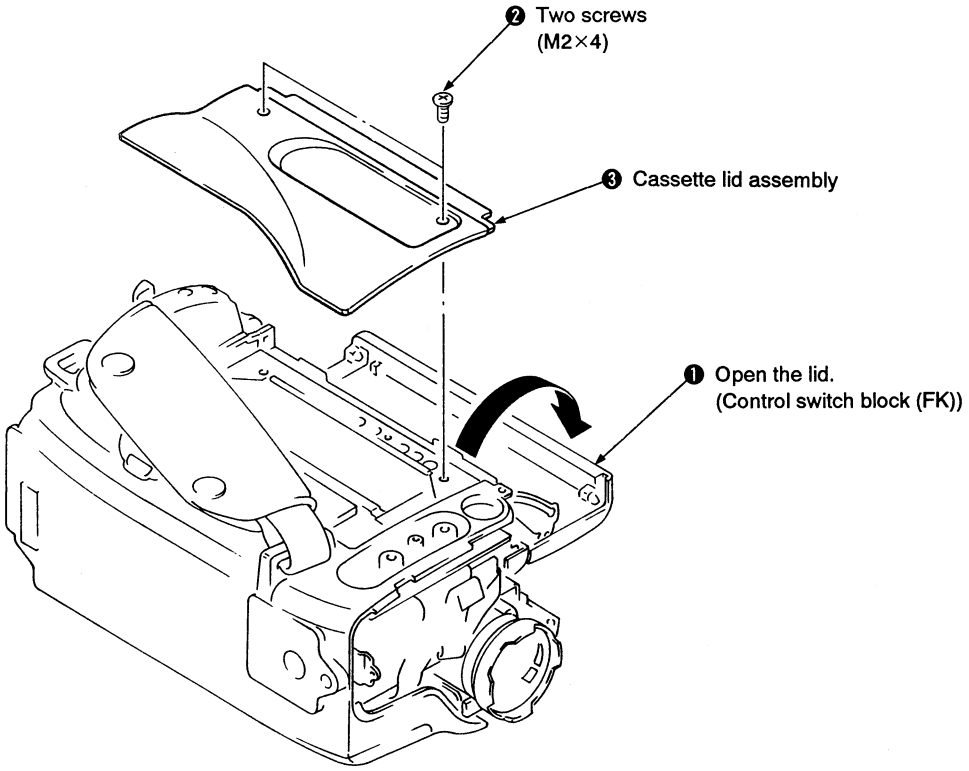

SECTION 2
DISASSEMBLY

2-1. REMOVAL OF F PANEL BLOCK

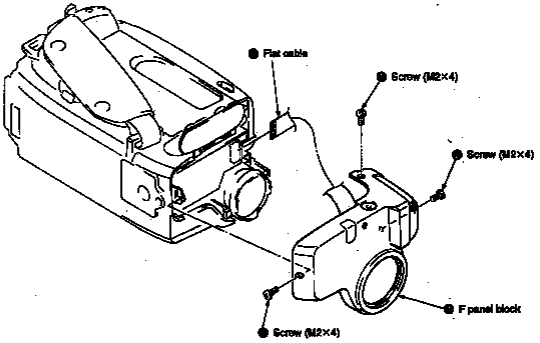

2-2. REMOVAL OF CASSETTE LID ASSEMBLY

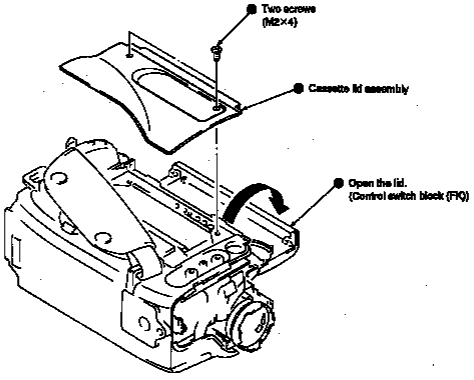

2-3. REMOVAL OF CABINET (L) ASSEMBLY

Note: When incorporating the cabinet (L) block assembly, be sure to remove the lithium battery first or the cabinet (L) will not fit properly.

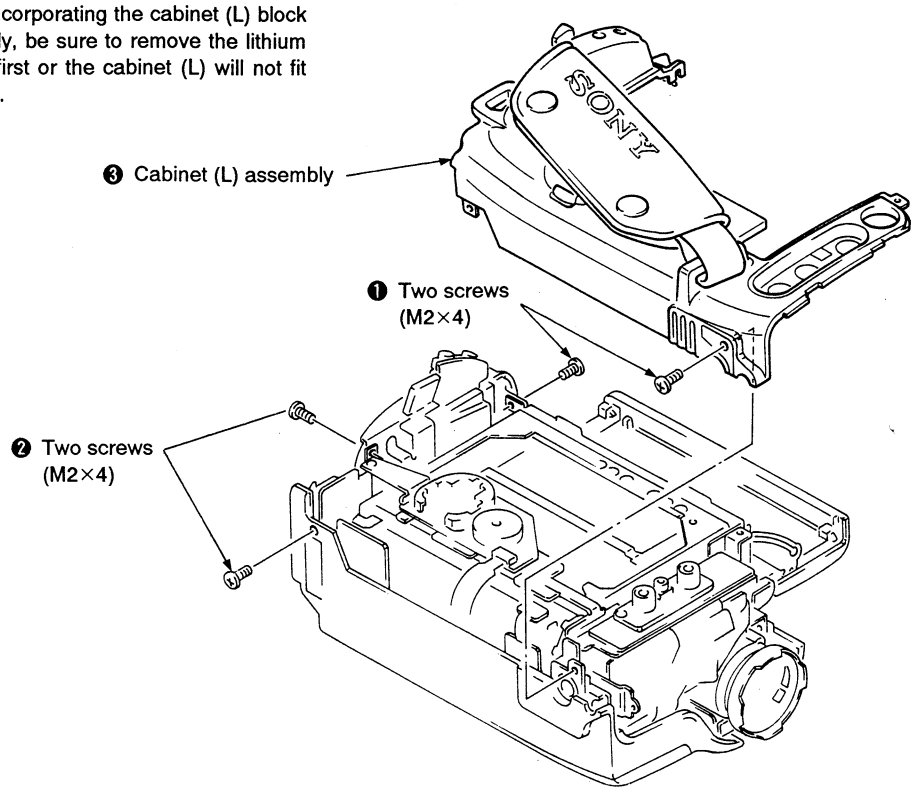

2-4. REMOVAL OF CABINET (R) ASSEMBLY

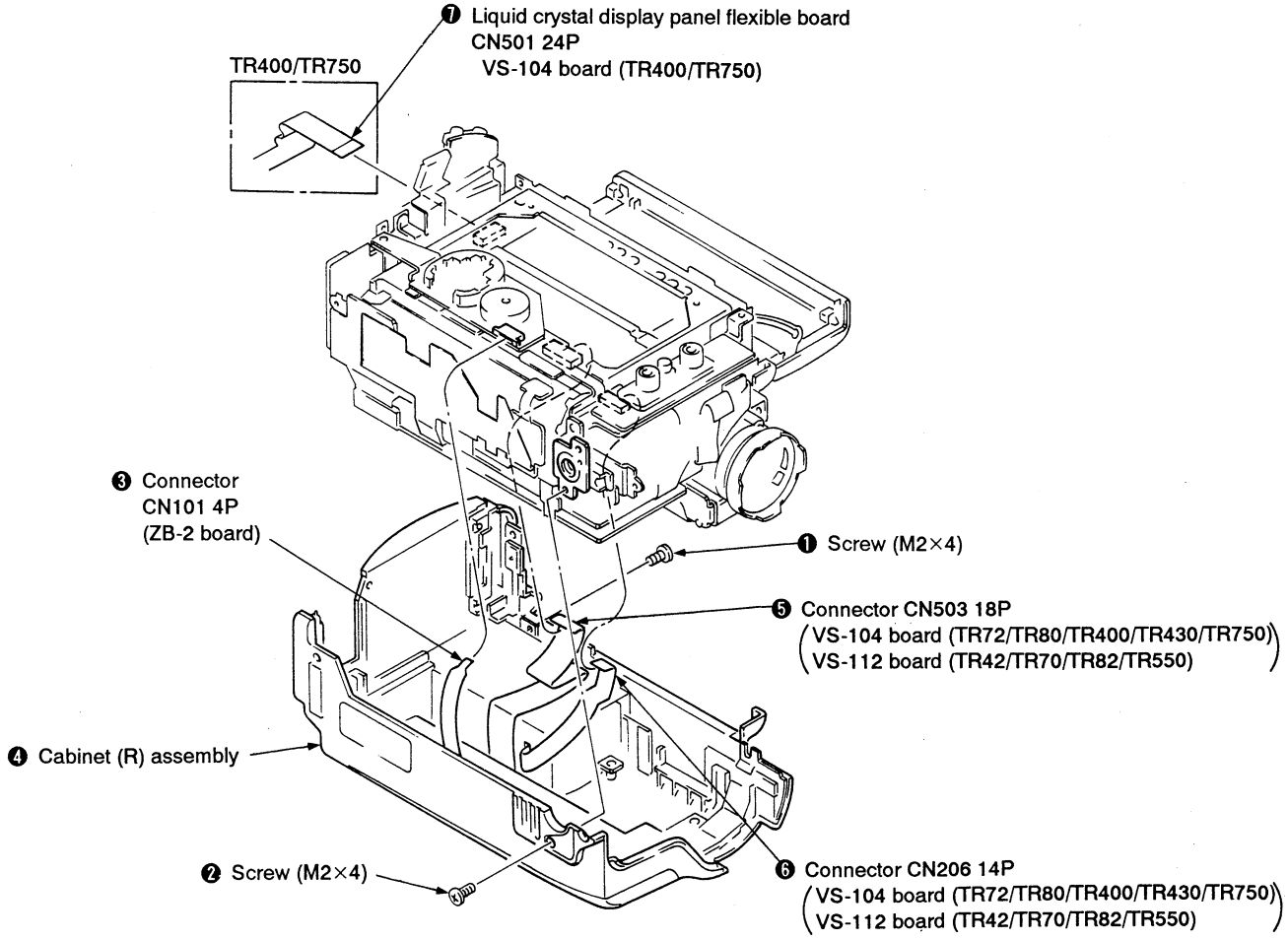

2-3. REMOVAL OF CABINET (L) ASSEMBLY

Note: When incorporating the cabinet (L) block assembly, be sure to remove the lithium battery first or the cabinet (L) will not fit properly.

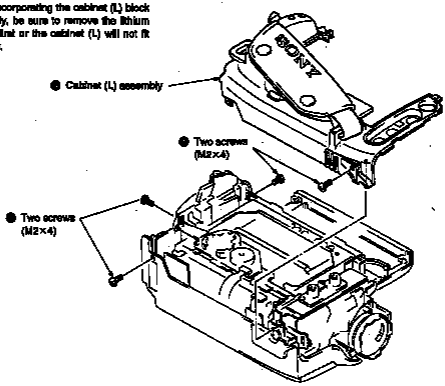

2-4. REMOVAL OF CABINET (R) ASSEMBLY

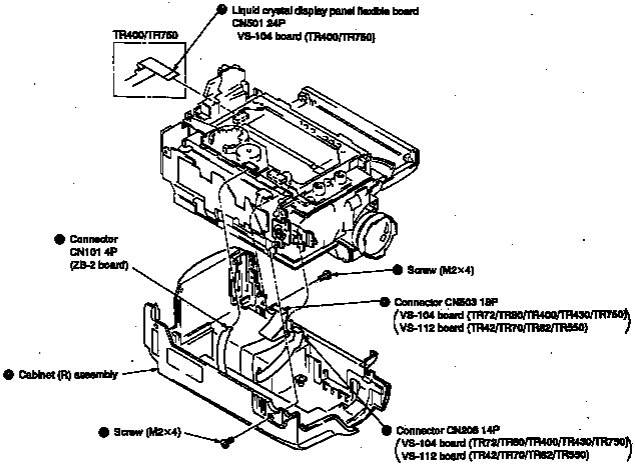

2-5. REMOVAL OF EVF ASSEMBLY (TR42/TR72/TR82/TR400/TR430/TR550/TR750)

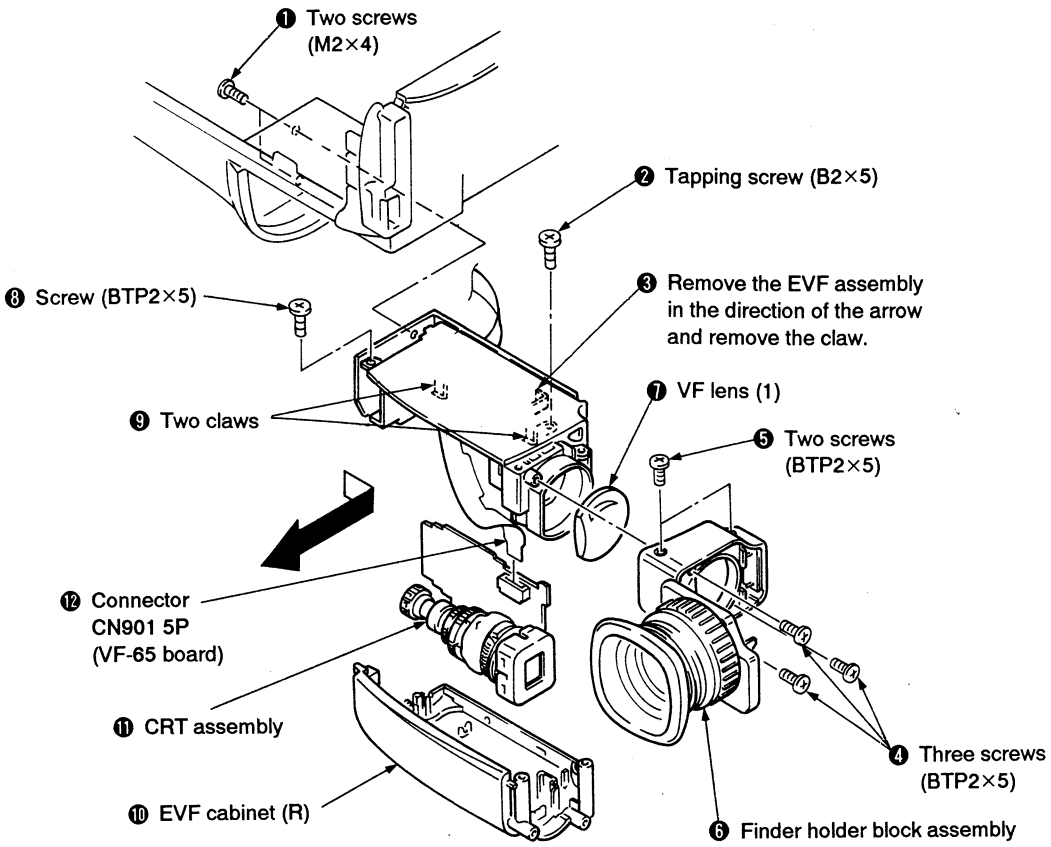

2-5. REMOVAL OF EVF ASSEMBLY (TR70/TR80)

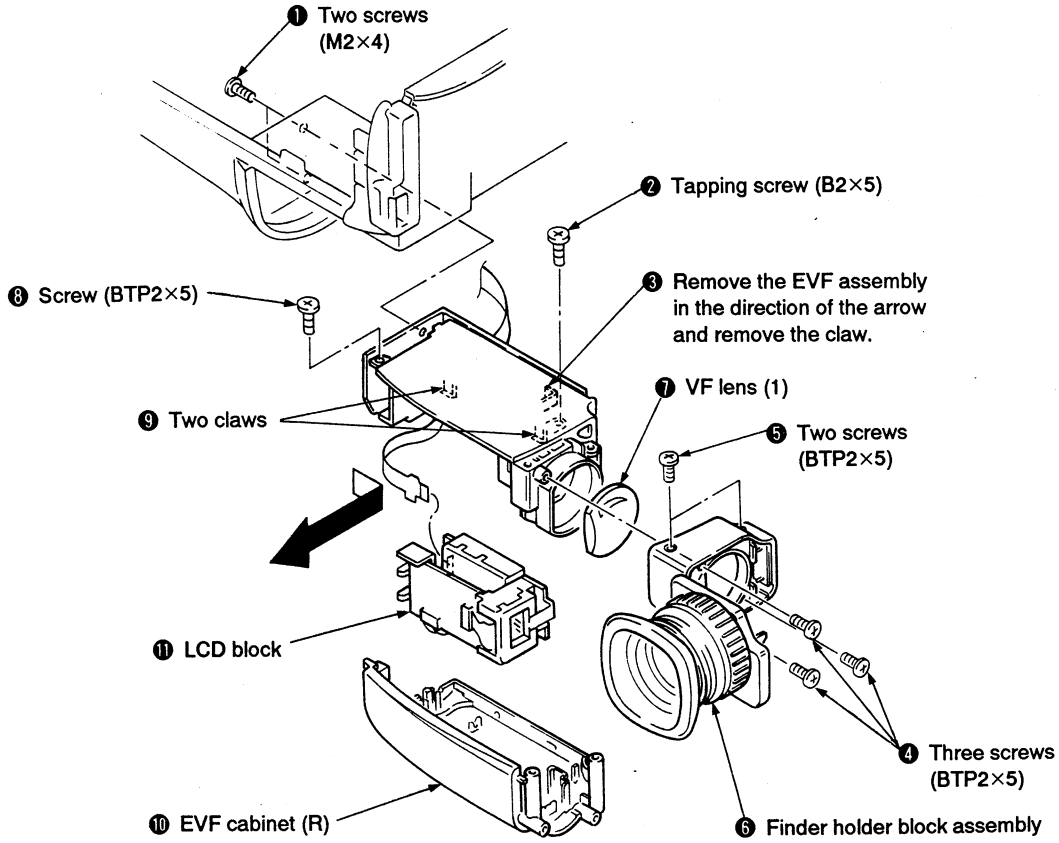

2-5. REMOVAL OF EVF ASSEMBLY (TR42/TR72/TR82/TR400/TR430/TR550/TR750)

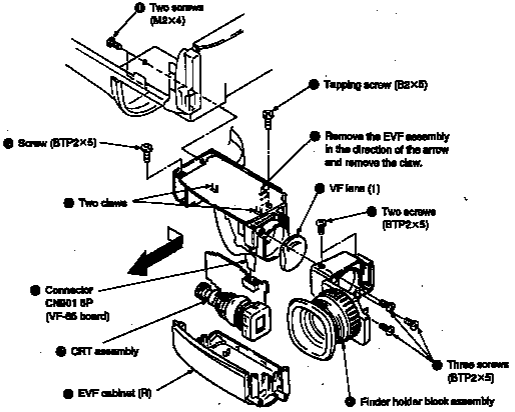

2-5. REMOVAL OF EVF ASSEMBLY (TR70/TR80)

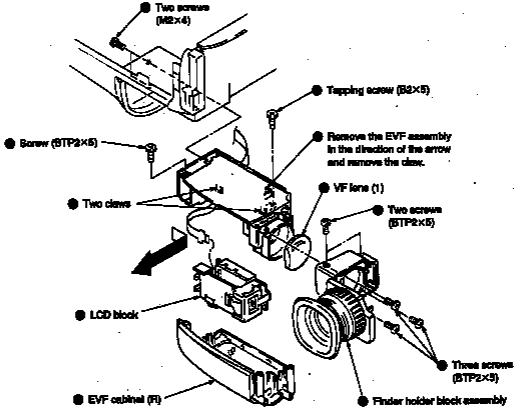

2-6. REMOVAL OF CONTROL SWITCH BLOCK (CK)

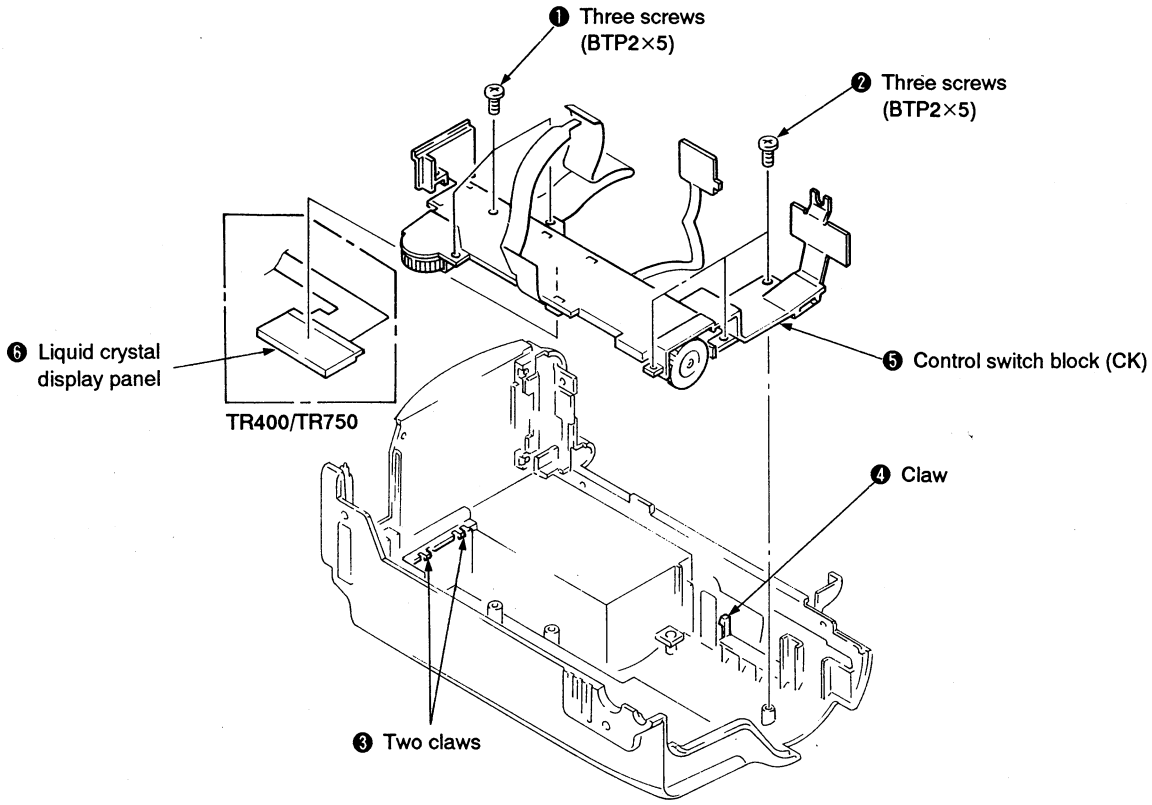

2-7. REMOVAL OF DD-60 BOARD (TR72/TR80/TR400/TR430/TR750)
REMOVAL OF DD-66 BOARD (TR42/TR70/TR82/TR550)

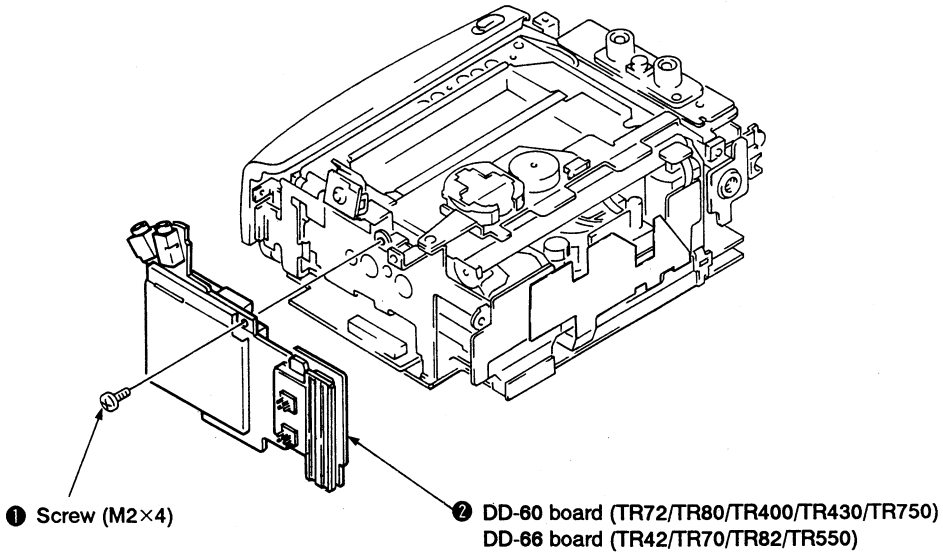

2-6. REMOVAL OF CONTROL SWITCH BLOCK (CK)

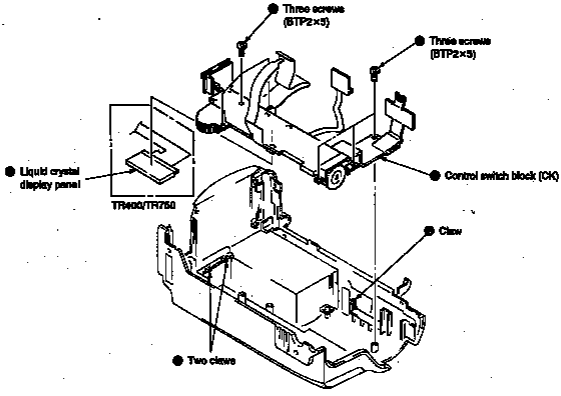

2-7. REMOVAL OF DD-60 BOARD (TR72/TR80/TR400/TR430/TR750)
REMOVAL OF DD-66 BOARD (TR42/TR70/TR82/TR550)

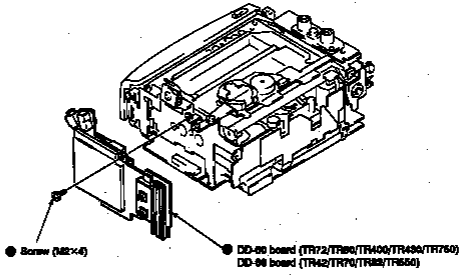

2-8. REMOVAL OF TERMINAL BOARD AND AU-165 BOARD (TR72/TR80/TR400/TR430/TR750), AU-169 BOARD (TR42/TR70/TR82/TR550)

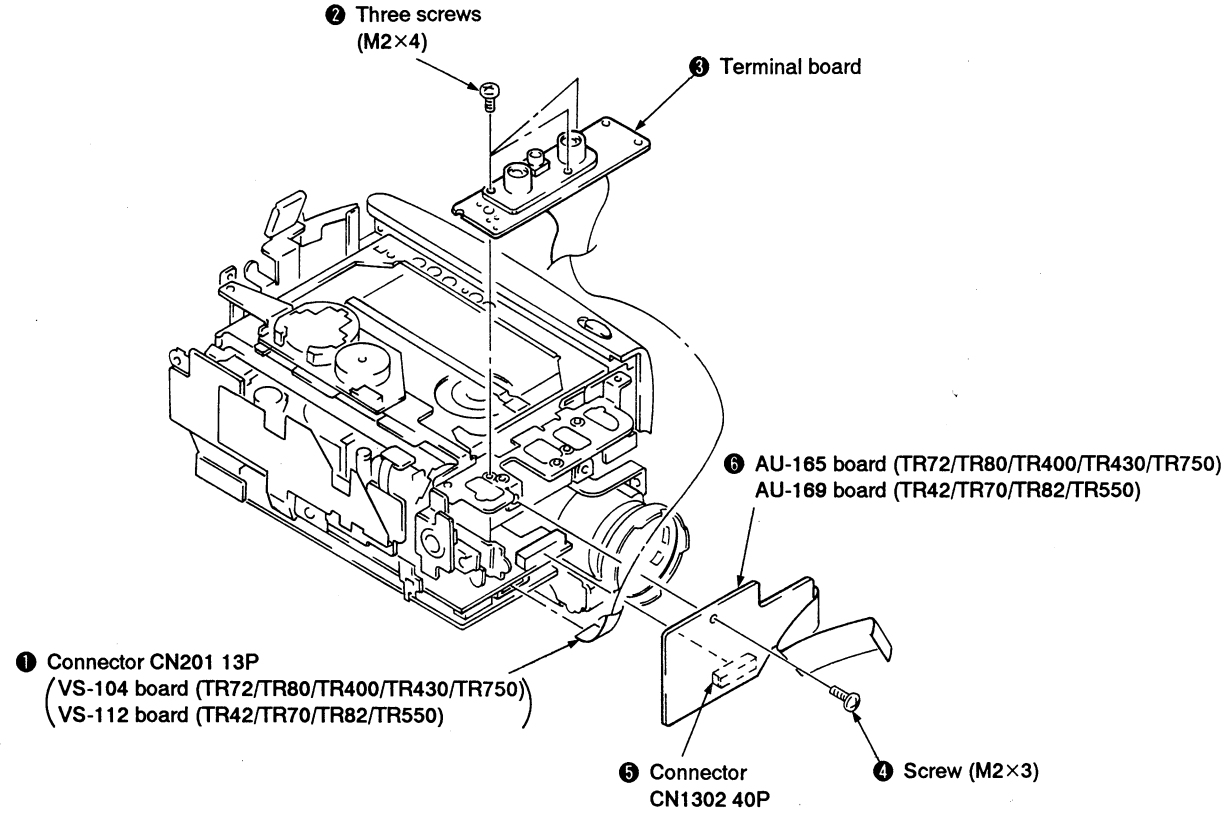

2-9. REMOVAL OF ZOOM LENS BLOCK AND VC-138 BOARD (TR72/TR80/TR400/TR430/TR750), VC-145 BOARD (TR42/TR70/TR82/TR550)

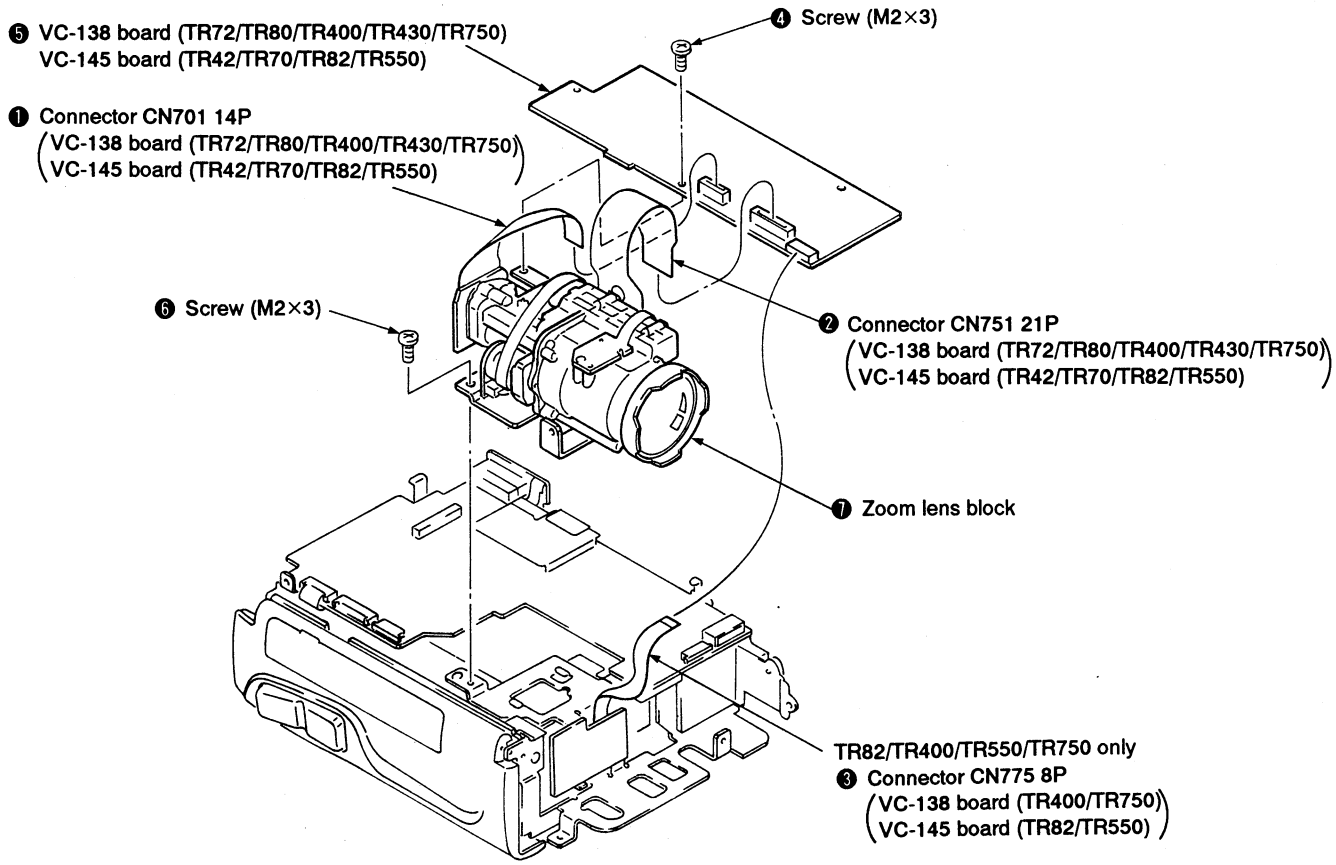

2-8. REMOVAL OF TERMINAL BOARD AND AU-165 BOARD (TR72/TR80/TR400/TR430/TR750), AU-169 BOARD (TR42/TR70/TR82/TR550)

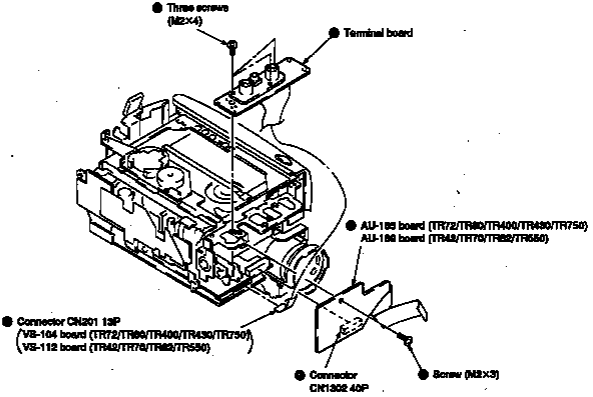

2-9. REMOVAL OF ZOOM LENS BLOCK AND VC-138 BOARD (TR72/TR80/TR400/TR430/TR750), VC-145 BOARD (TR42/TR70/TR82/TR550)

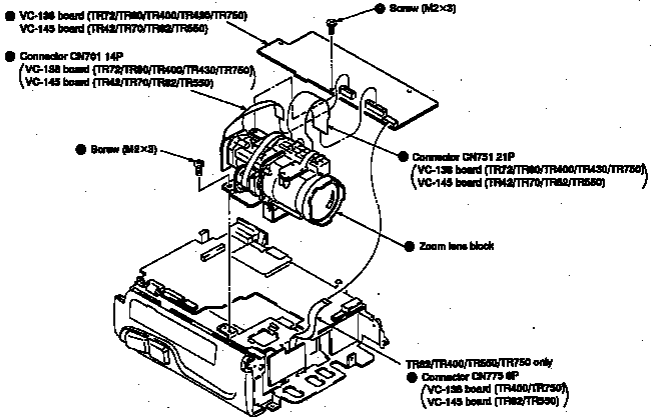

2-10. REMOVAL OF VS-104 BOARD (TR72/TR80/TR400/TR430/TR750)
REMOVAL OF VS-112 BOARD (TR42/TR70/TR82/TR550)

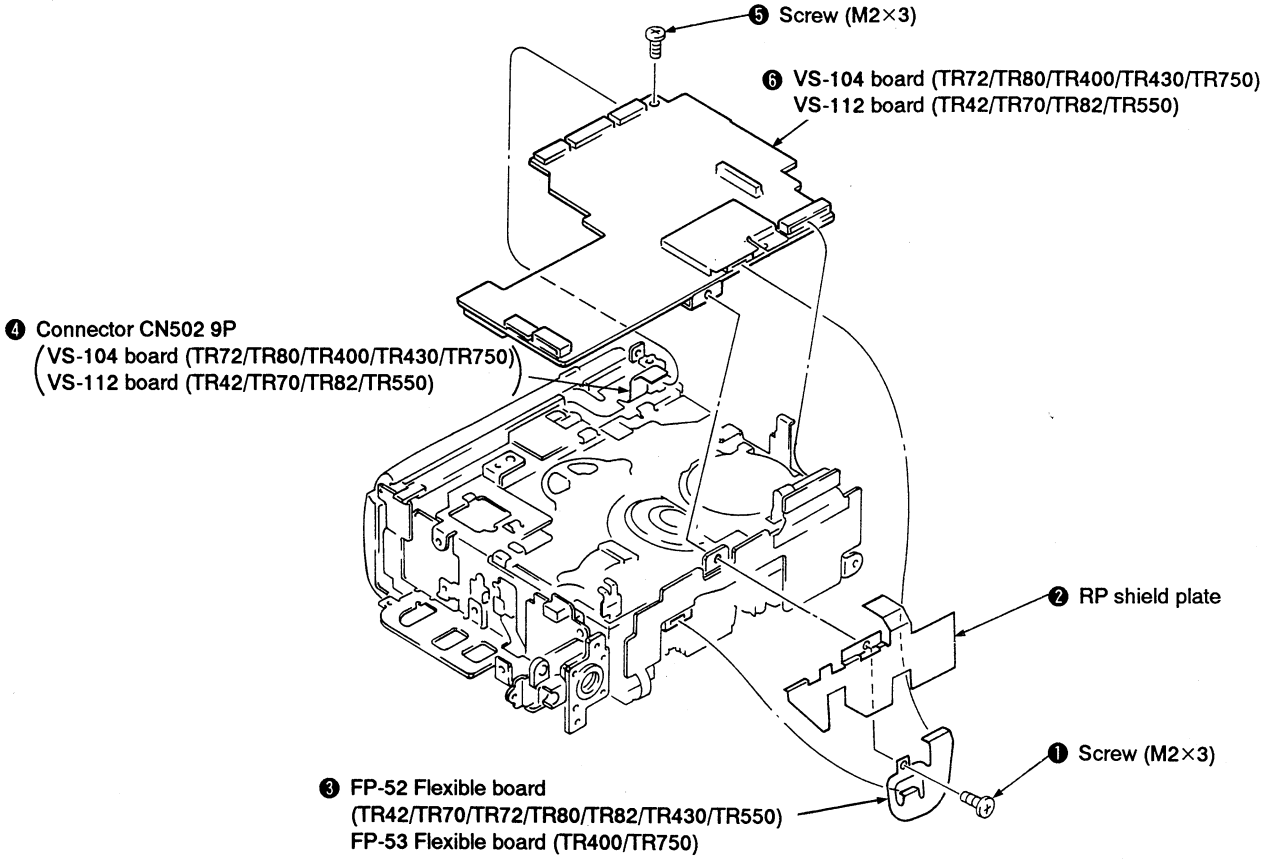

2-11. REMOVAL OF SL-38 BOARD

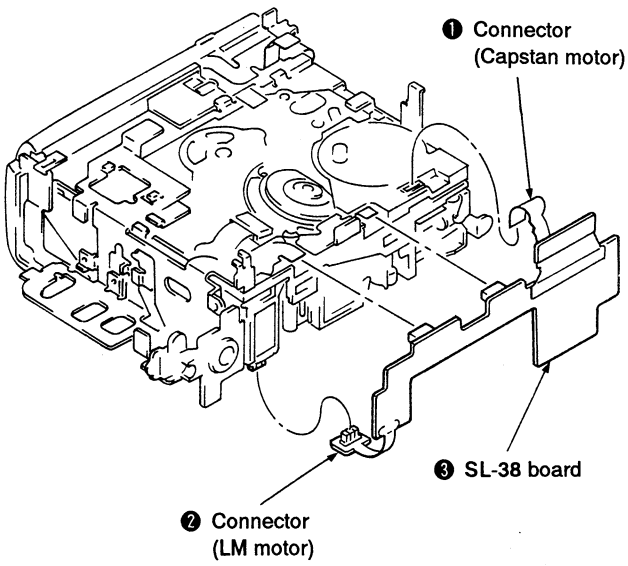

2-12. REMOVE OF CONTROL SWITCH BLOCK (FK)

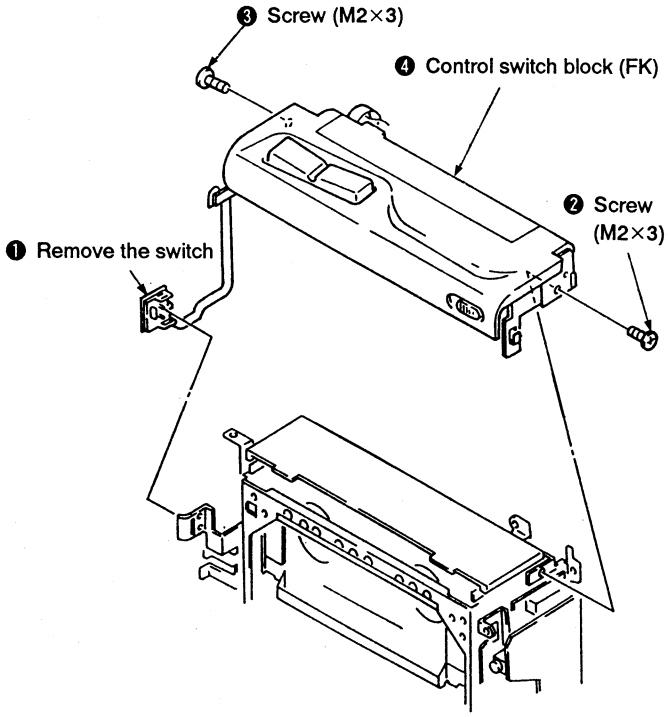

2-10. REMOVAL OF VS-104 BOARD (TR72/TR80/TR400/TR430/TR750)
REMOVAL OF VS-112 BOARD (TR42/TR70/TR82/TR550)

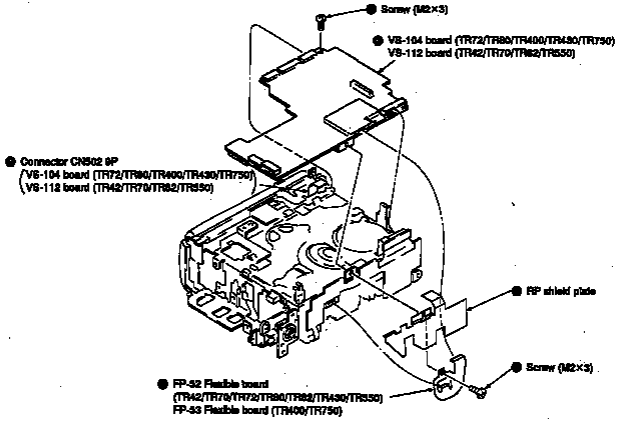

2-11. REMOVAL OF SL-38 BOARD

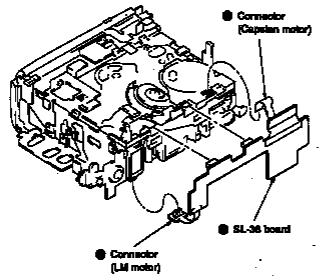

2-12. REMOVE OF CONTROL SWITCH BLOCK (FK)

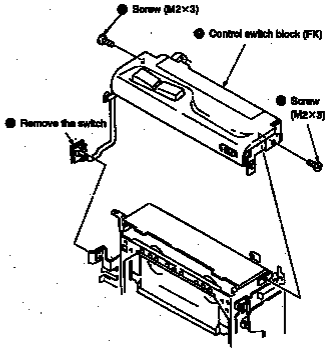

2-13. INTERNAL VIEWS

— Left side —

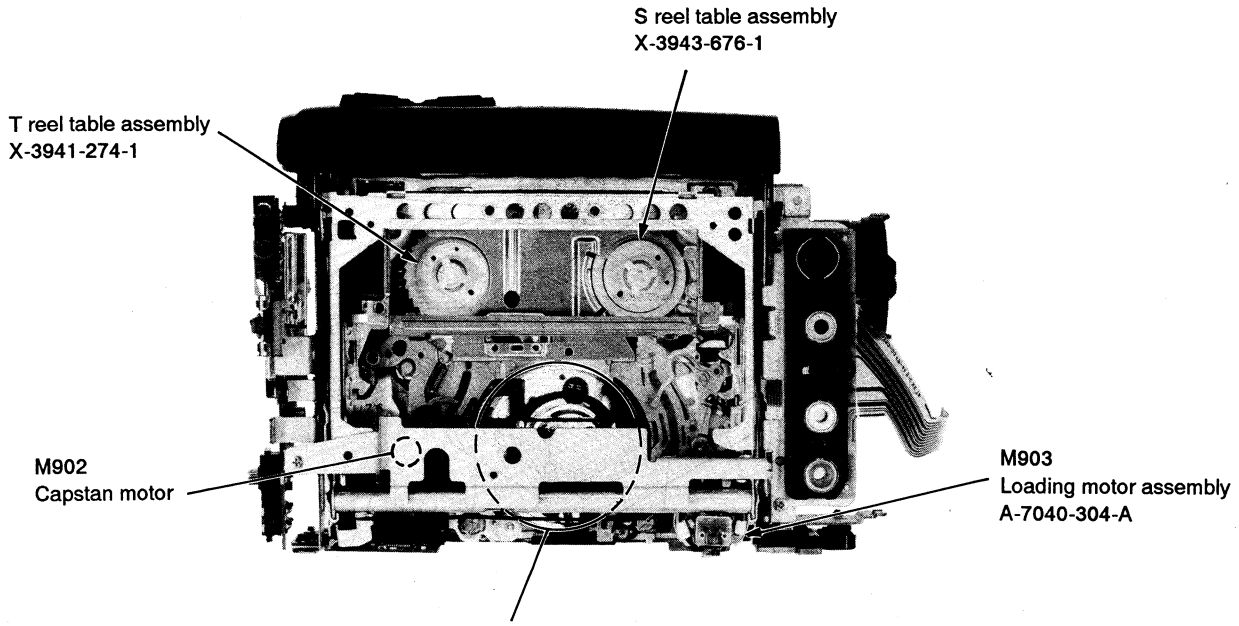

M901 (TR42/TR70/TR72/TR80/TR82/TR430/TR550)

Drum assembly	DGH-78A-R	A-7048-564-A
Upper drum assembly	DGR-78-R	A-7049-501-A

M901 (TR400/TR750)

Drum assembly	DGH-92A-R	A-7048-633-A
Upper drum assembly	DGR-92-R	A-7049-567-A

— Right side —

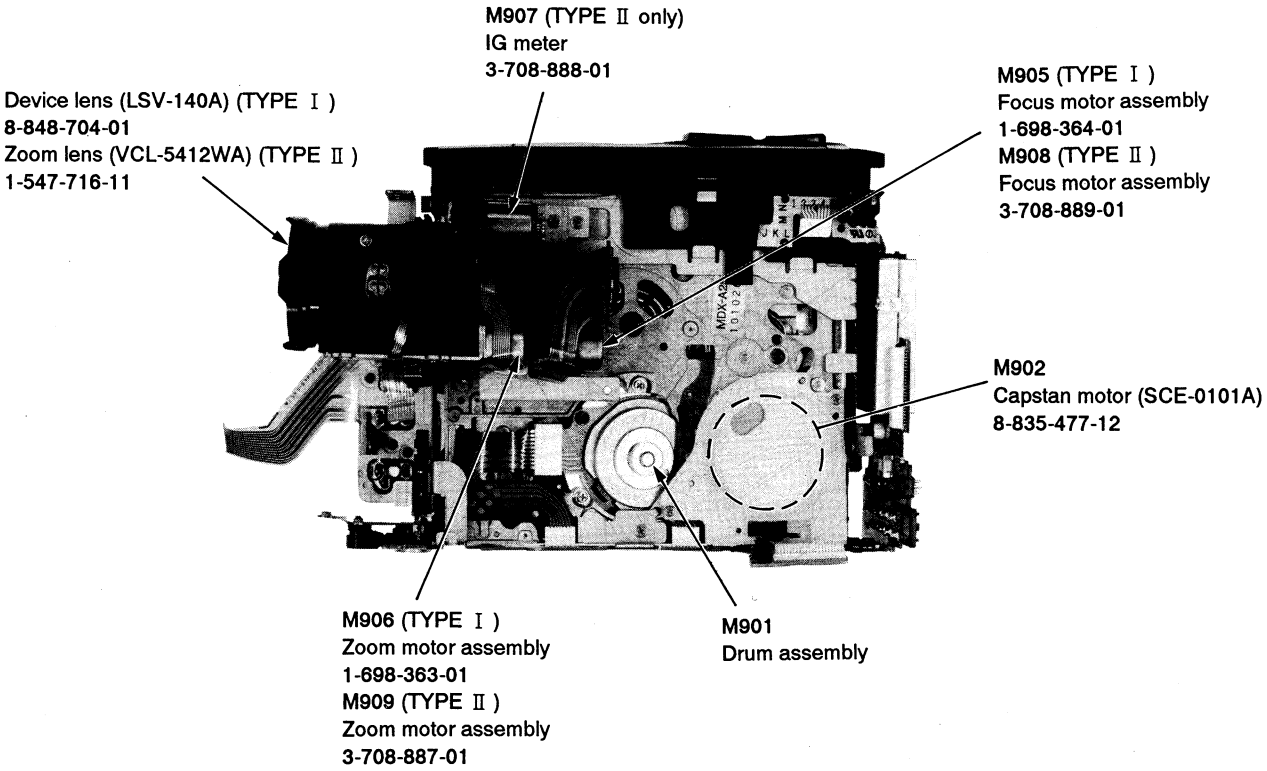

2-13. INTERNAL VIEWS

— Left side —

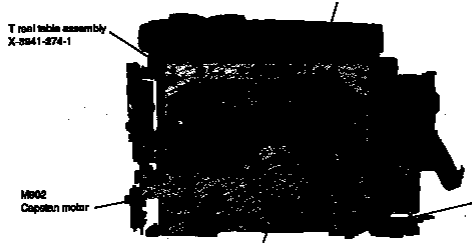

M001 (TR42/TR70/TR72/TR80/TR82/TR430/TR550)

Drum assembly	DGH-75A-R	A-7048-564-A
Upper drum assembly	DGR-76-R	A-7049-501-A

M001 (TR400/TR750)

Drum assembly	DGH-82A-R	A-7048-833-A
Upper drum assembly	DGR-92-R	A-7049-587-A

— Right side —

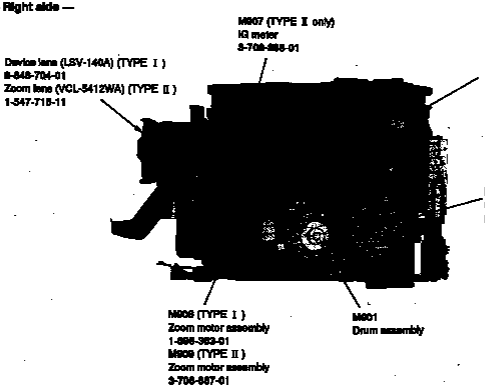

9-973-560-11

Sony Corporation
Personal Video Group

English
94C0938-1
Printed in Japan

Published by CV Quality Engineering DIV.

9-873-568-11

Sony Corporation
Personal Video Group

English
94C0938-1
Printed in Japan
© 1994. 5
Published by CV Quality Engineering DIV.

4-2. PRINTED WIRING BOARDS AND SCHEMATIC DIAGRAMS

THIS NOTE IS COMMON FOR PRINTED WIRING BOARDS AND SCHEMATIC DIAGRAMS.
(In addition to this , the necessary note is printed in each block.)

- **For printed wiring boards.**
- ▒ : Pattern from the side which enables seeing.
  (The other layers'patterns are not indicated.)
- Circled numbers refer to waveforms.
- (B) or (F), etc. of capacitors indicate the temperature characteristics.
- ○: Through hole .

Caution:	
Pattern face side: (Conductor Side)	Parts on the pattern face side seen from the pattern face are indicated.
Parts face side: (Component side)	Parts on the parts face side seen from the parts face are indicated.

- **For schematic diagrams.**
- Caution when replacing chip parts.
  New parts must be attached after removal of chip.
  Be careful not to heat the minuts side of tantalum capacitor, because it is damaged by the heat.
- All resistors are in ohms, 1/4W unless otherwise noted.
  Chip resistor are 1/10W unless otherwise noted.
  kΩ : 1000Ω , MΩ : 1000kΩ .
- All capacitors are in μF unless otherwise noted. pF: μμF.
  50V or less are not indicated except for electrolytics and tantalums.
- All variable and adjustable resistors have characteristic curve B, unless otherwise noted.
- : nonflammable resistor.
- : fusible resistor.
- : panel designation.
- △ : internal component.
- : adjustment for repeair.
- ▬ : B+ Line.
- ▬ ▬ : B– Line.
- : IN/OUT direction of (+, –) B LINE.
- Circled numbers refer to waveforms.

Note:	Note:
The components identified by mark ⚠ or dotted line with mark ⚠ are critical for safty. Replace only with part number specified.	Les composants identifiés par une marque ⚠ sont critiques pour la sécurité. Ne les remplacer que par une piéce portant le numéro spécifié.

When indicating parts by reference number, please include the board name.

- **Measuring conditions voltage value and waveform. (CAMERA block)**
- The object is color bar chart of pattern box.
- Voltages are dc between ground and measurement points. Readings are taken with a digital multimeter (DC 10MΩ).
- Voltage variations may be noted due to normal production tolerances.

1. Connection

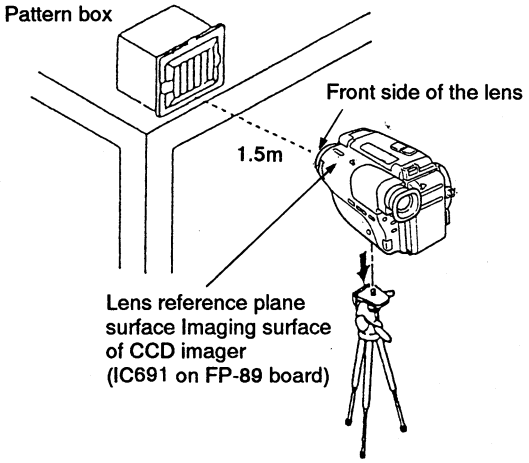

2. Adjust the distance so that the output waveform of Fig. a and the Fig. b can be obtain.

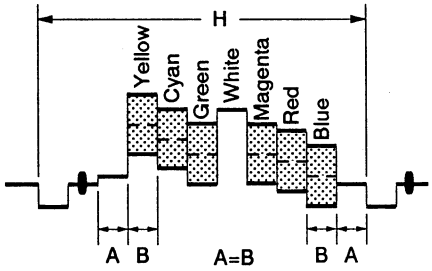

Fig. a (Video output terminal output waveform)

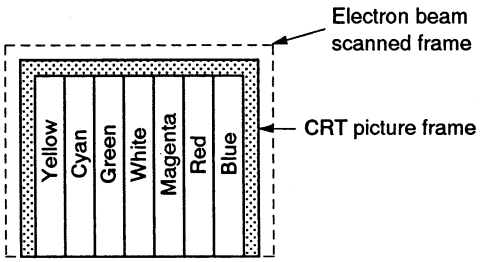

Fig. b (Picture on monitor TV)

(VIDEO, SERVO/SYSTEM CONTROL, AUDIO, LCD CONTROL)

- Voltages are dc between ground and measurement points.
- Readings are taken with a color-bar signal input.
- Readings are taken with a digital multimeter (DC10MΩ).
- Voltage variations may be noted due to normal production tolerances.

4-2. PRINTED WIRING BOARDS AND SCHEMATIC DIAGRAMS

THIS NOTE IS COMMON FOR PRINTED WIRING BOARDS AND SCHEMATIC DIAGRAMS.
(In addition to this, the necessary note is printed in each block.)

- **For printed wiring boards.**
- ▬ : Pattern from the side which enables seeing.
  (The other layers' patterns are not indicated.)
- Circled numbers refer to waveforms.
- (B) or (F), etc. of capacitors indicate the temperature characteristics.
- ○ : Through hole.

Caution:	
Pattern face side: (Conductor Side)	Parts on the pattern face side seen from the pattern face are indicated.
Parts face side: (Component side)	Parts on the parts face side seen from the parts face are indicated.

- **For schematic diagrams.**
- Caution when replacing chip parts.
  New parts must be attached after removal of chip.
  Be careful not to heat the minute side of tantalum capacitor, because it is damaged by the heat.
- All resistors are in ohms, 1/4W unless otherwise noted.
  Chip resistor are 1/10W unless otherwise noted.
  kΩ : 1000Ω , MΩ : 1000kΩ .
- All capacitors are in μF unless otherwise noted. pF: μμF.
  50V or less are not indicated except for electrolytics and tantalums.
- All variable and adjustable resistors have characteristic curve B, unless otherwise noted.
- : non/flammable resistor.
- : fusible resistor.
- ▭ : panel designation.
- △ : Internal component.
- ▭ : adjustment for repair.
- ▬▬ : B+ Line.
- ▬ ▬ ▬ : B− Line.
- : IN/OUT direction of (+, −) B LINE.
- Circled numbers refer to waveforms.

Note:	Note:
The components identified by mark ⚠ or dotted line with mark ⚠ are critical for safty. Replace only with part number specified.	Les composants identifiés par une marque ⚠ sont critiques pour la sécurité. Ne les remplacer que par une pièce portant le numéro spécifié.

When indicating parts by reference number, please include the board name.

- **Measuring conditions voltage value and waveform. (CAMERA block)**
- The object is color bar chart of pattern box.
- Voltages are dc between ground and measurement points.
  Readings are taken with a digital multimeter (DC 10MΩ).
- Voltage variations may be noted due to normal production tolerances.

1. Connection

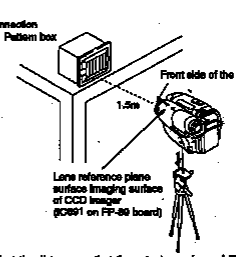

2. Adjust the distance so that the output waveform of Fig. a and the Fig. b can be obtain.

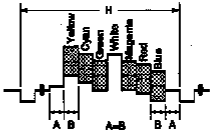

Fig. a (Video output terminal output waveform)

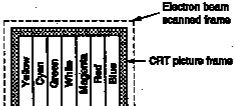

Fig. b (Picture on monitor TV)

(VIDEO, SERVO/SYSTEM CONTROL, AUDIO, LCD CONTROL)

- Voltages are dc between ground and measurement points.
- Readings are taken with a color-bar signal input.
- Readings are taken with a digital multimeter (DC10MΩ).
- Voltage variations may be noted due to normal production tolerances.

FP-89 (CCD IMAGER) PRINTED WIRING BOARD

— Ref. No. FP-89 BOARD: 3000 series —

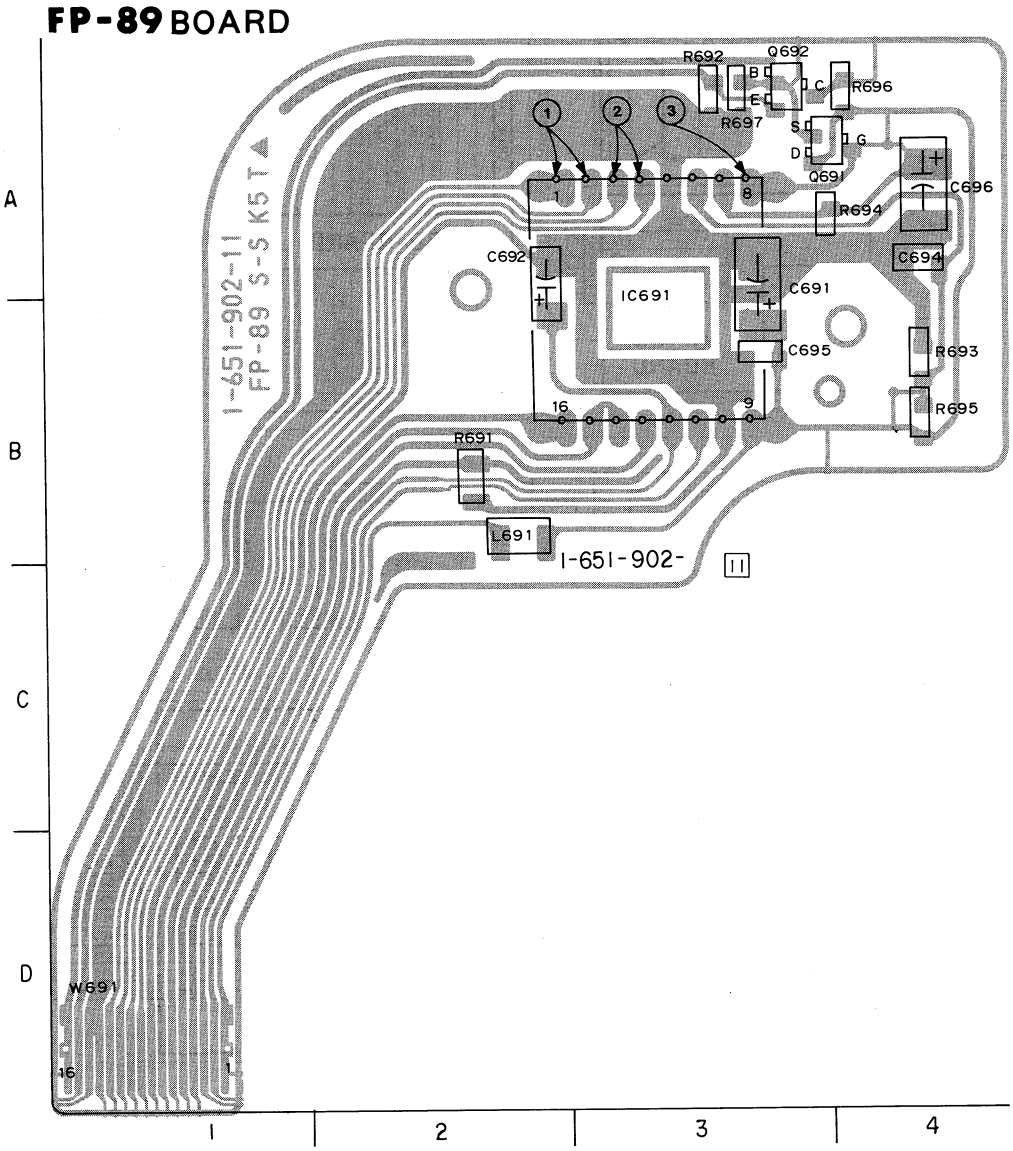

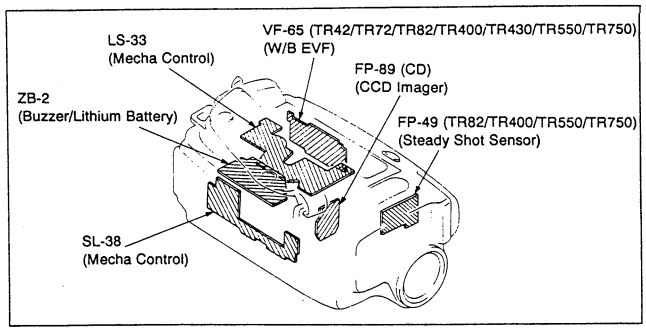

FP-89 (CCD IMAGER) PRINTED WIRING BOARD

— Ref. No. FP-89 BOARD: 3000 series —

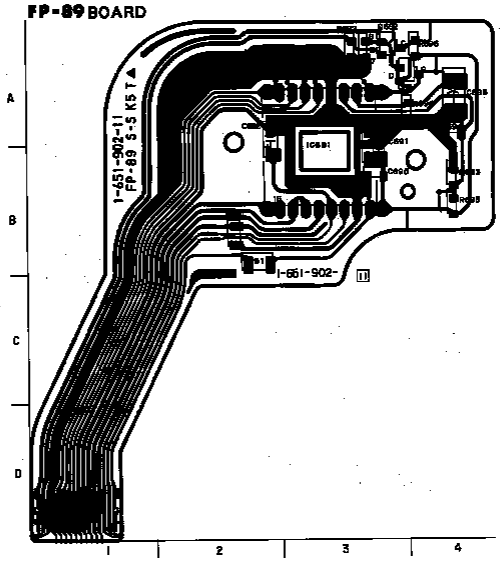

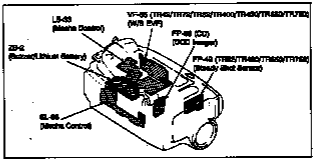

FP-89 (CCD IMAGER) SCHEMATIC DIAGRAM

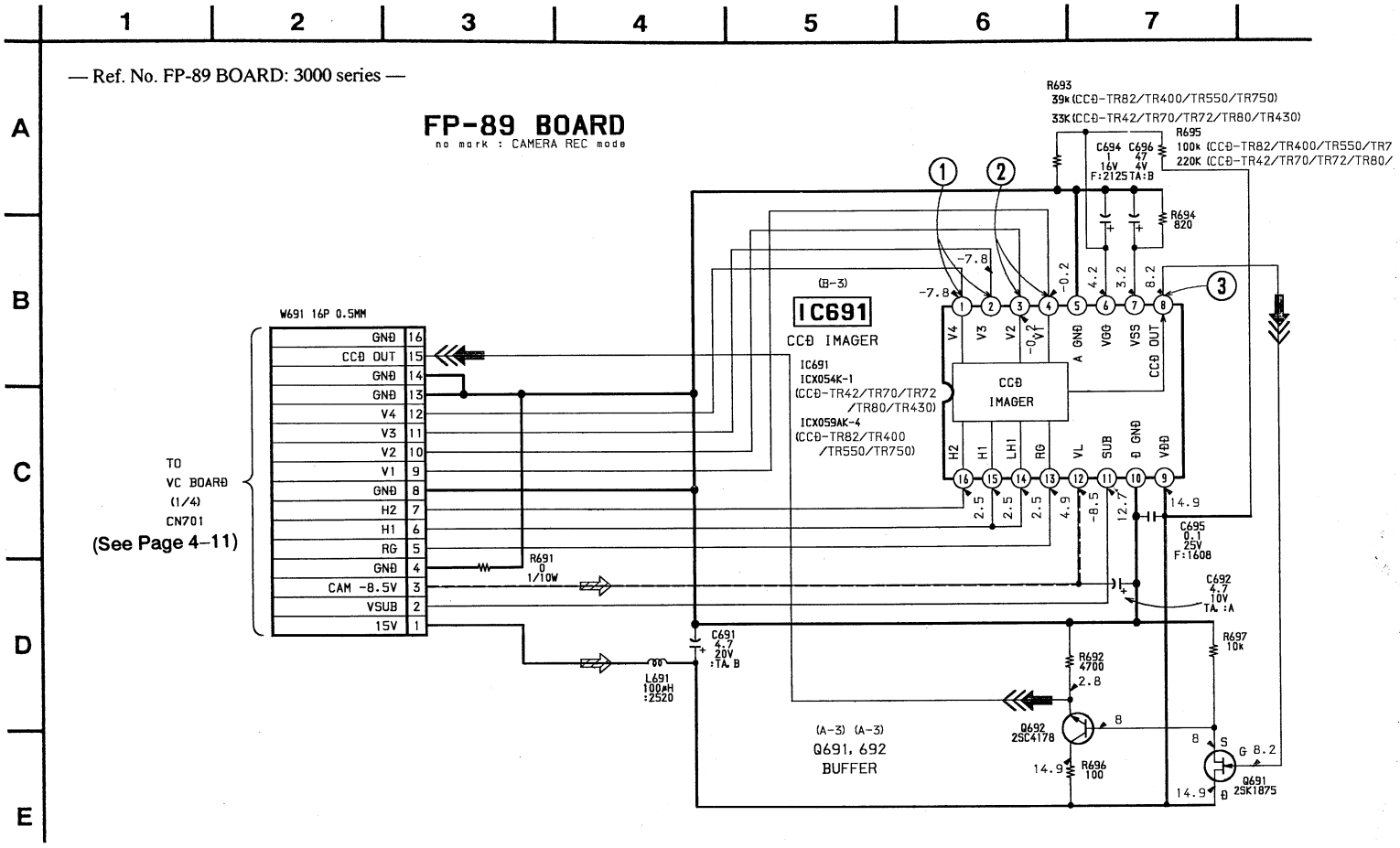

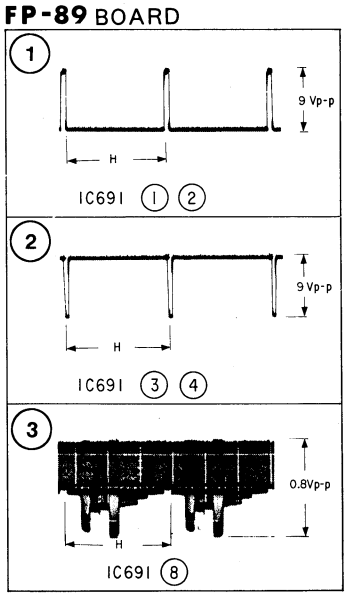

- **SIGNAL PATH**

	VIDEO SIGNAL		
	CHROMA	Y	Y/CHROMA
REC			➡
PB			

Note on the CCD imager replacement

- Some of this units require the correction data by the CCD imager (IC691 on FP-89 board), some do not.
  The correction data is input in F page and addresses 1D to 2C of the camera micro processor (IC602 on VC board), and also written on the CCD data label put on the shield case (upper) of the DD board.
  The correction data is not required for the CCD imager supplied for repair. Therefore, when replacing the CCD imager to which the CCD data label is put, remove the CCD data label and input 00 to F page and addresses 1D to 2C of the camera micro processor. Refer to the camera adjustment for input method.
- The CCD imager is not mounted for the already mounted FP-89 board supplied as the repair parts.
  When replacing the FP-89 board, remove the CCD imager from the old board and install on the new board.
- Perform all adjustments of the camera block when the CCD imager has been replaced.
- Handle the CCD imager with attention such as MOS IC as it may be broken by static electricity in the structure.
  Also, prevent the receiving light section from dust attached and strong light.

FP-89 (CCD IMAGER) SCHEMATIC DIAGRAM

—Ref. No. FP-89 BOARD: 3800 series—

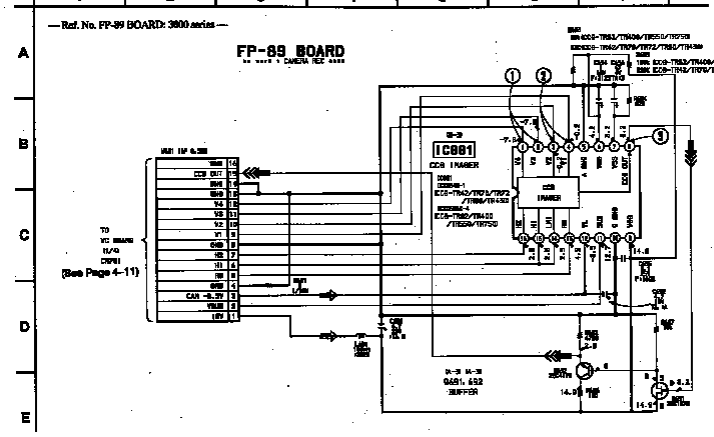

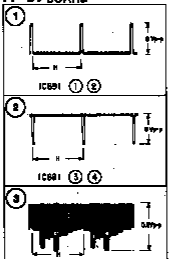

• SIGNAL PATH

	VIDEO SIGNAL		
	CHROMA	Y	Y/CHROMA
REC			⇒
PB			

Note on the CCD imager replacement

- Some of this units require the correction data by the CCD imager (IC691 on FP-89 board), some do not.
  The correction data is input in F page and addresses 1D to 2C of the camera micro processor (IC602 on VC board), and also written on the CCD data label put on the shield case (upper) of the DD board.
  The correction data is not required for the CCD imager supplied for repair. Therefore, when replacing the CCD imager to which the CCD data label is put, remove the CCD data label and input 00 to F page and addresses 1D to 2C of the camera micro processor. Refer to the camera adjustment for input method.
- The CCD imager is not mounted for the already mounted FP-89 board supplied as the repair parts.
  When replacing the FP-89 board, remove the CCD imager from the old board and install on the new board.
- Perform all adjustments of the camera block when the CCD imager has been replaced.
- Handle the CCD imager with attention such as MOS IC as it may be broken by static electricity in the structure.
  Also, prevent the receiving light section from dust attached and strong light.

FP-49 (STEADY SHOT SENSOR) PRINTED WIRING BOARD (TR82/TR400/TR550/TR750)

— Ref. No. FP-49 BOARD: 3000 series —

FP-49 BOARD

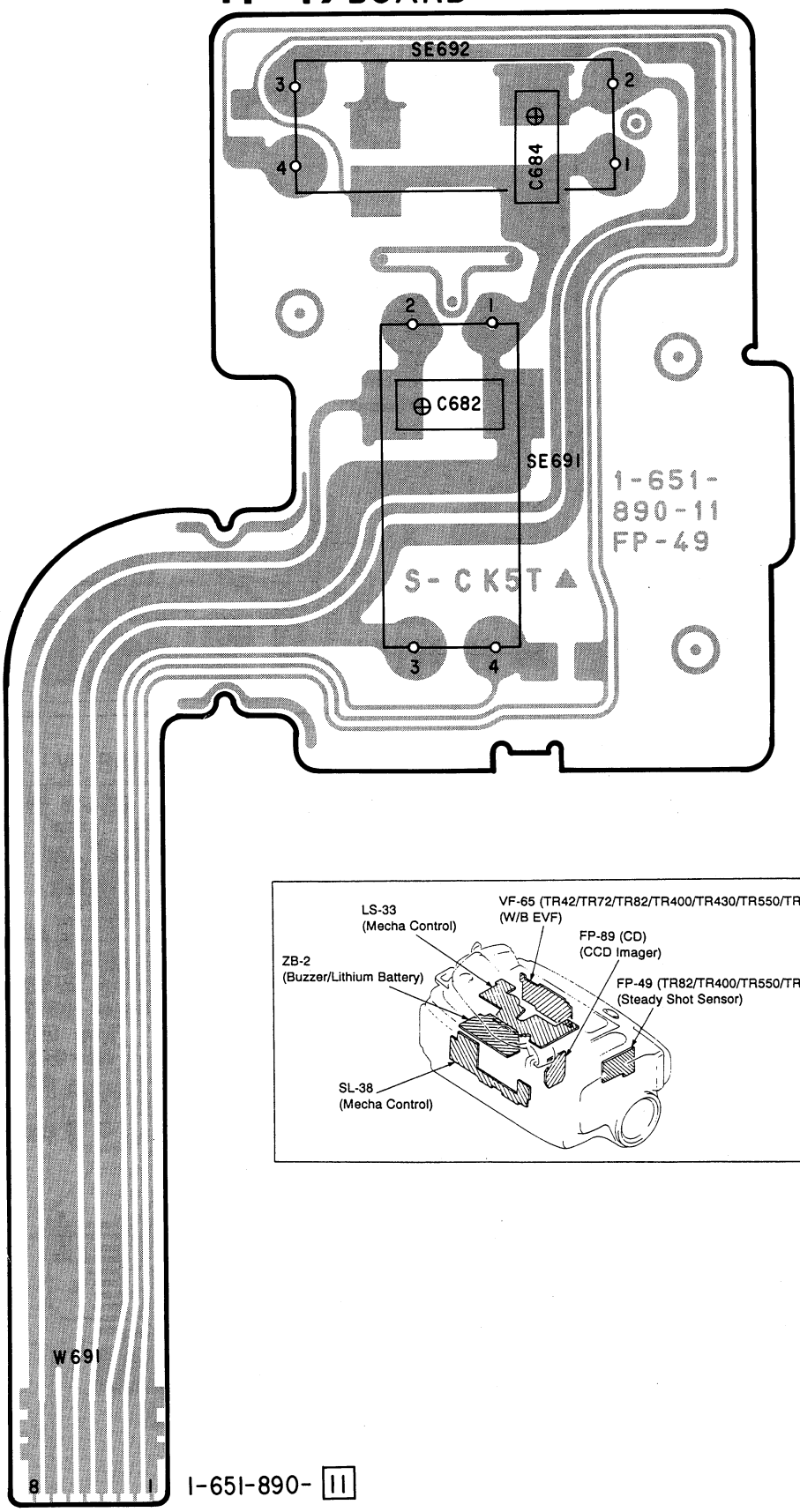

09 1-651-890- 11

FP-49 (STEADY SHOT SENSOR) PRINTED WIRING BOARD (TR82/TR400/TR550/TR750)

— Ref. No. FP-49 BOARD: 3000 series —

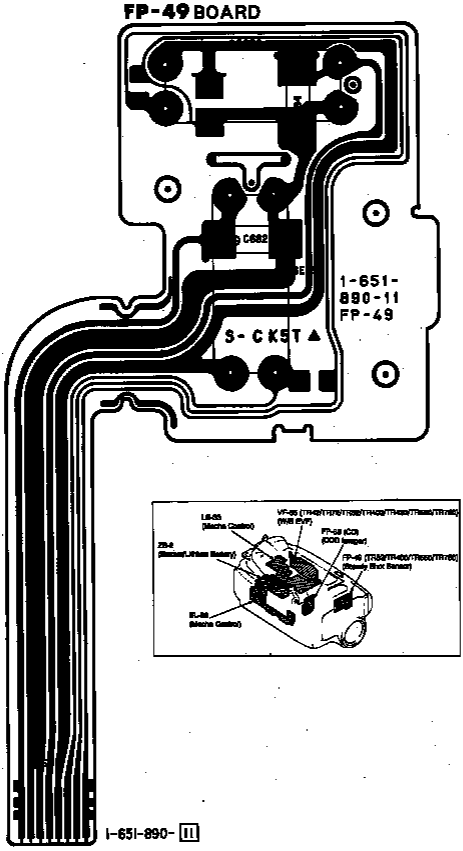

09 1-651-890- 11

FP-49 (STEADY SHOT SENSOR) SCHEMATIC DIAGRAM (TR82/TR400/TR550/TR750)

— Ref. No. FP-49 BOARD: 3000 series —

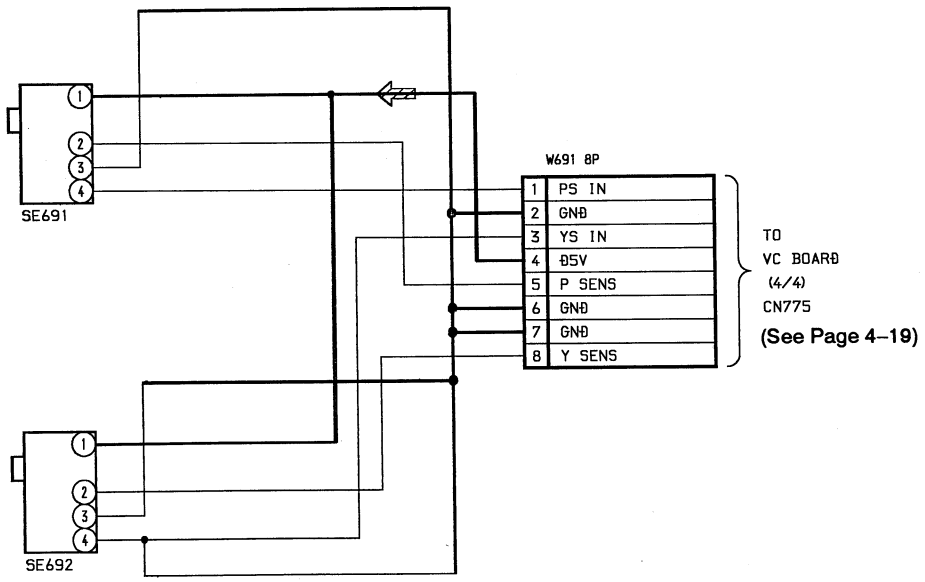

09

FP-49 (STEADY SHOT SENSOR) SCHEMATIC DIAGRAM (TR82/TR400/TR550/TR750)

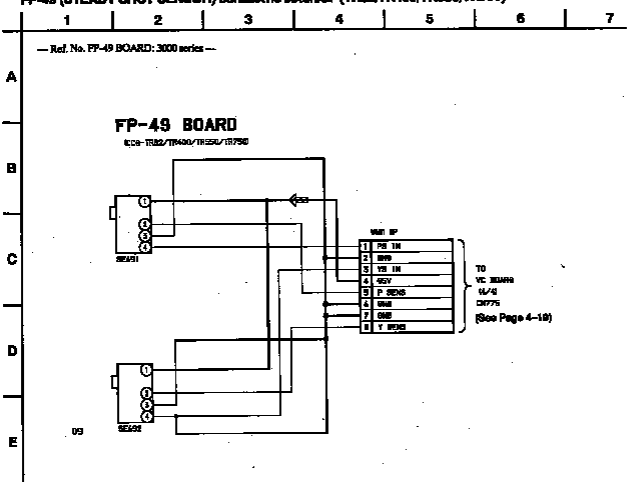

SECTION 5
REPAIR PARTS LIST

5-1. EXPLODED VIEWS

NOTE:
- -XX, -X mean standardized parts, so they may have some difference from the original one.
- The mechanical parts with no reference number in the exploded views are not supplied.
- Items marked " * " are not stocked since they are seldom required for routine service. Some delay should be anticipated when ordering these items.
- Hardware (# mark) list is given in the last of this parts list.

The components identified by mark ⚠ or dotted line with mark ⚠ are critical for safety.
Replace only with part number specified.

Les composants identifiés par une marque ⚠ sont critiques pour la sécurité.
Ne les remplacer que par une piéce portant le numéro spécifié.

5-1-1. F PANEL BLOCK ASSEMBLY

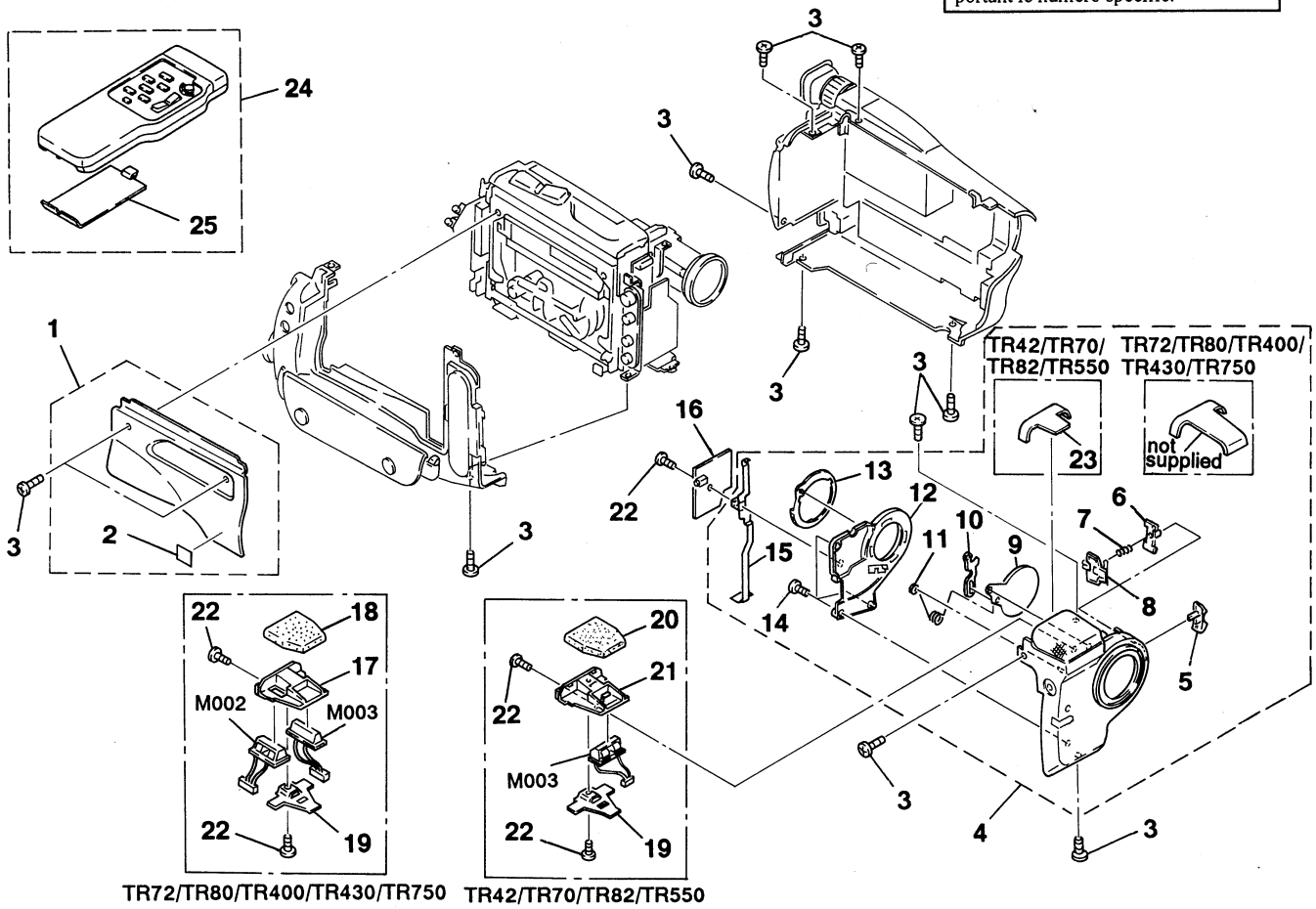

Ref. No.	Part No.	Description	Remark
1	X-3943-920-1	LID ASSY, CASSETTE (TR72)	
1	X-3943-927-1	LID ASSY, CASSETTE (TR82)	
1	X-3944-005-1	LID ASSY, CASSETTE (TR80)	
1	X-3944-006-1	LID ASSY, CASSETTE (TR70)	
1	X-3944-078-1	LID ASSY, CASSETTE (TR42)	
1	X-3944-084-1	LID ASSY, CASSETTE (TR550)	
1	X-3944-085-1	LID ASSY, CASSETTE (TR430)	
1	X-3944-086-1	LID ASSY, CASSETTE (TR400)	
1	X-3944-088-1	LID ASSY, CASSETTE (TR750)	
2	3-703-710-41	STICKER, SONY SYMBOL (12)	
3	3-719-381-01	SCREW (M2X4)	
4	X-3943-922-1	PANEL ASSY, F (TR72/TR80/TR430)	
4	X-3943-925-1	PANEL ASSY, F (TR82/TR550)	
4	X-3944-035-1	PANEL ASSY, F (TR70)	
4	X-3944-062-1	PANEL ASSY, F (TR400/TR750)	
4	X-3944-063-1	PANEL ASSY, F (TR42)	
5	3-958-614-01	SWITCH, POWER	
6	3-958-633-01	BUTTON, POWER PUSH	
7	3-303-973-01	SPRING, COMPRESSION	
* 8	3-958-609-01	PLATE, FUNCTION, POWER	
9	3-958-616-01	COVER, LENS	
* 10	3-958-632-01	LEVER, LC	
11	3-958-637-01	SPRING, LC	
* 12	3-958-605-01	RETAINER, LC	
* 13	3-958-615-01	RING, DRIVING	
14	3-719-601-01	SCREW (B2X5), TAPPING	
* 15	3-958-953-01	PLATE, GROUNT, MA	
* 16	A-7063-956-A	MA-199 BOARD, COMPLETE	(TR42/TR70/TR82/TR550)
* 16	A-7063-962-A	MA-179 BOARD, COMPLETE	(TR72/TR80/TR400/TR430/TR750)
* 17	X-3944-205-1	HOLDER ASSY (S), MICROPHONE	(TR72/TR80/TR400/TR430/TR750)
* 18	3-958-951-01	CUSHION (S), MICROPHONE	(TR72/TR80/TR400/TR430/TR750)
* 19	3-958-952-01	PLATE, FIXED, MICROPHONE	
* 20	3-958-954-01	CUSHION (M), MICROPHONE	(TR42/TR70/TR82/TR550)
* 21	X-3944-206-1	HOLDER ASSY (M), MICROPHONE	(TR42/TR70/TR82/TR550)
22	3-948-339-01	SCREW (BTP)(2X5), HEAD	
23	3-958-610-01	CAP (M), MICROPHONE	(TR42/TR70/TR82/TR550)
24	1-467-574-21	REMOTE COMMANDER (RMT-708)	
25	3-958-131-01	LID, BATTERY CASE (for RMT-708)	
M002	1-542-162-11	MICROHONE UNIT	

SECTION 5
REPAIR PARTS LIST

5-1. EXPLODED VIEWS

NOTE:
- -XX, -X mean standardized parts, so they may have some difference from the original one.
- The mechanical parts with no reference number in the exploded views are not supplied.
- Items marked " * " are not stocked since they are seldom required for routine service. Some delay should be anticipated when ordering these items.
- Hardware (# mark) list is given in the list of this parts list.

The components identified by mark ⚠ or dotted line with mark ⚠ are critical for safety.
Replace only with part number specified.

Les composants identifiés par une marque ⚠ sont critiques pour la sécurité.
Ne les remplacer que par une pièce portant le numéro spécifié.

5-1-1. F PANEL BLOCK ASSEMBLY

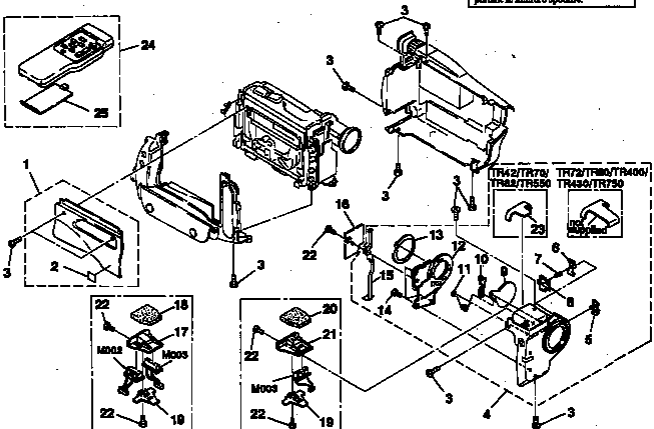

TR72/TR80/TR400/TR430/TR750 TR42/TR70/TR82/TR550

Ref. No.	Part No.	Description	Remark
1	X-3943-920-1	LID ASSY, CASSETTE (TR72)	
1	X-3943-927-1	LID ASSY, CASSETTE (TR82)	
1	X-3944-005-1	LID ASSY, CASSETTE (TR80)	
1	X-3944-006-1	LID ASSY, CASSETTE (TR70)	
1	X-3944-072-1	LID ASSY, CASSETTE (TR42)	
1	X-3944-014-1	LID ASSY, CASSETTE (TR550)	
1	X-3944-015-1	LID ASSY, CASSETTE (TR430)	
1	X-3944-016-1	LID ASSY, CASSETTE (TR400)	
1	X-3944-043-1	LID ASSY, CASSETTE (TR750)	
2	3-703-710-41	STICKER, SONY SYMBOL (LE)	
3	1-719-221-01	SCREW (BZ14)	
4	X-3943-922-1	PANEL ASSY, F (TR72/TR80/TR430)	
4	X-3943-925-1	PANEL ASSY, F (TR82/TR550)	
4	X-3944-035-1	PANEL ASSY, F (TR70)	
4	X-3944-042-1	PANEL ASSY, F (TR400/TR750)	
4	X-3944-043-1	PANEL ASSY, F (TR42)	
5	3-958-814-01	SWITCH, POWER	
6	3-958-838-01	BUTTON, POWER PUSH	
7	3-943-973-01	SPRING, COMPRESSION	
* 8	3-958-809-01	PLATE, FUNCTION, POWER	
9	3-958-816-01	COVER, LENS	
* 10	3-958-832-01	LETTER, LC	
11	3-958-437-01	SPRING, LC	
* 12	3-958-805-01	RETAINER, LC	
* 13	3-958-815-01	RING, DRIVING	
14	3-719-401-01	SCREW (BZ25), TAPPING	
* 15	3-958-958-01	PLATE, SHUTTL, MA	
* 16	A-7063-866-A	MA-199 BOARD, COMPLETE (TR42/TR70/TR82/TR550)	
* 16	A-7063-862-A	MA-179 BOARD, COMPLETE (TR72/TR80/TR400/TR430/TR750)	
* 17	X-3944-905-1	HOLDER ASSY (S), MICROPHONE (TR72/TR80/TR400/TR430/TR750)	
* 18	3-958-951-01	CUSHION (S), MICROPHONE (TR72/TR80/TR400/TR430/TR750)	
* 19	3-958-958-01	PLATE, FIXED, MICROPHONE	
* 20	3-958-954-01	CUSHION (M), MICROPHONE (TR42/TR70/TR82/TR550)	
* 21	X-3944-906-1	HOLDER ASSY (M), MICROPHONE (TR42/TR70/TR82/TR550)	
22	3-948-339-01	SCREW (BTP) (2x6), HEAD	
23	3-958-410-01	CAP (M), MICROPHONE(TR42/TR70/TR82/TR550)	
24	1-487-574-11	REMOTE COMMANDER (RMT-708)	
25	3-958-181-01	LID, BATTERY CASE (for RMT-708)	
M002	1-545-165-11	MICROPHONE UNIT	

5-1-2. CABINET (L) BLOCK ASSEMBLY

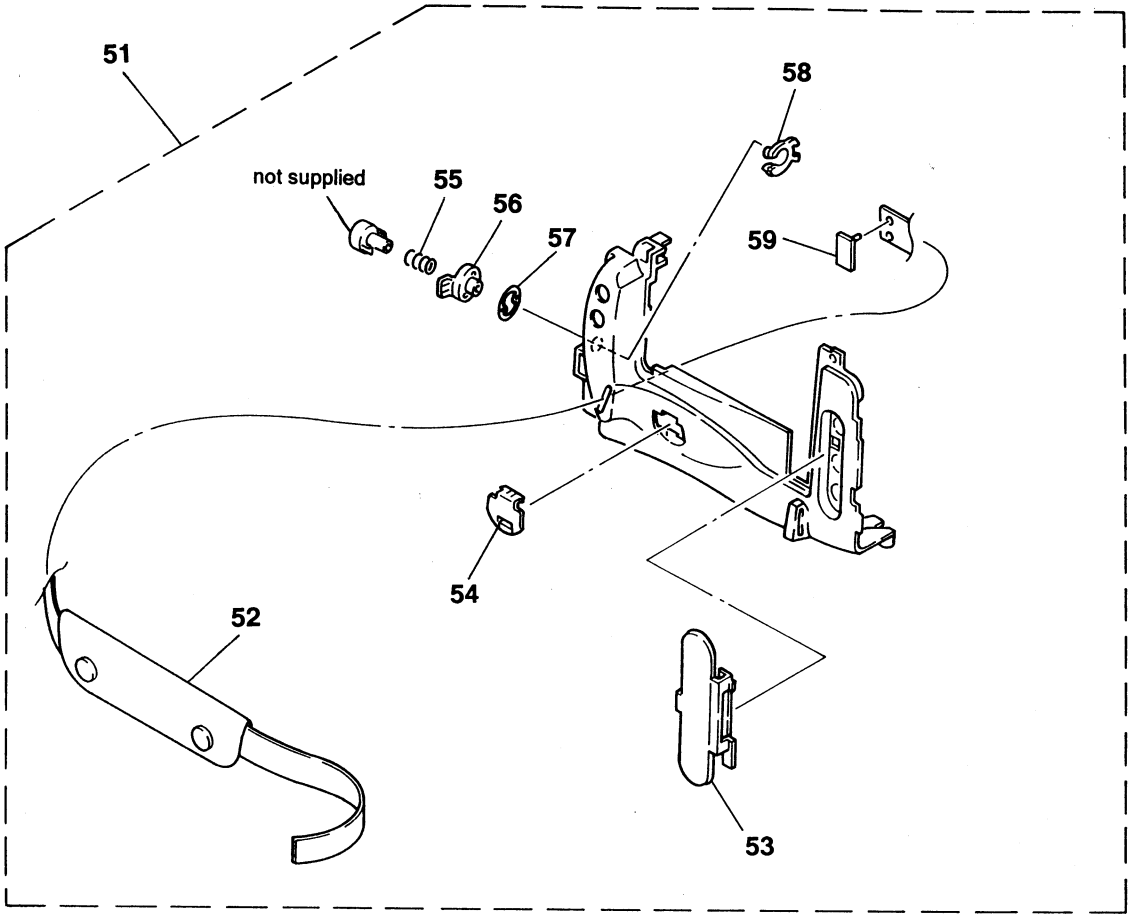

Ref. No.	Part No.	Description	Remark
51	X-3943-923-1	CABINET (L) ASSY (TR72/TR80/TR430)	
51	X-3943-924-1	CABINET (L) ASSY (TR42/TR70/TR82/TR550)	
51	X-3944-037-1	CABINET (L) ASSY (TR400/TR750)	
52	3-736-807-01	BELT, GRIP	
53	3-958-606-01	COVER, JACK	
54	3-958-608-01	LID, LITHIUM POWER	
55	3-578-221-00	SPRING, COMPRESSION	
56	3-942-985-01	KNOB, STAND-BY	
57	3-736-364-01	SPRING	
58	3-942-953-01	HOLDER, STAND-BY KNOB	
59	3-942-895-01	STOPPER, BELT	

5-1-2. CABINET (L) BLOCK ASSEMBLY

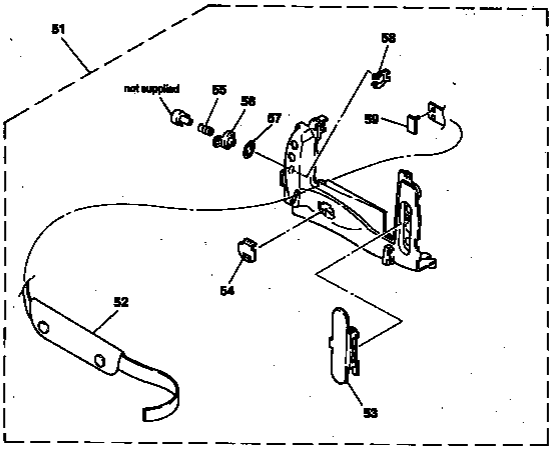

Ref. No.	Part No.	Description	Remark
51	X-3943-923-1	CABINET (L) ASSY (TR72/TR80/TR490)	
51	X-3943-924-1	CABINET (L) ASSY (TR42/TR70/TR82/TR550)	
51	X-3944-037-1	CABINET (L) ASSY (TR400/TR750)	
53	3-789-807-01	BELT, GRIP	
53	3-959-606-01	COVER, JACK	
54	3-958-608-01	LID, LITHIUM POWER	
55	3-578-221-00	SPRING, COMPRESSION	
56	3-843-985-01	KNOB, STAND-BY	
57	3-788-954-01	SPRING	
58	3-842-963-01	HOLDER, STAND-BY KNOB	
59	3-842-985-01	STOPPER, BELT	

5-1-3. CABINET (R) BLOCK ASSEMBLY

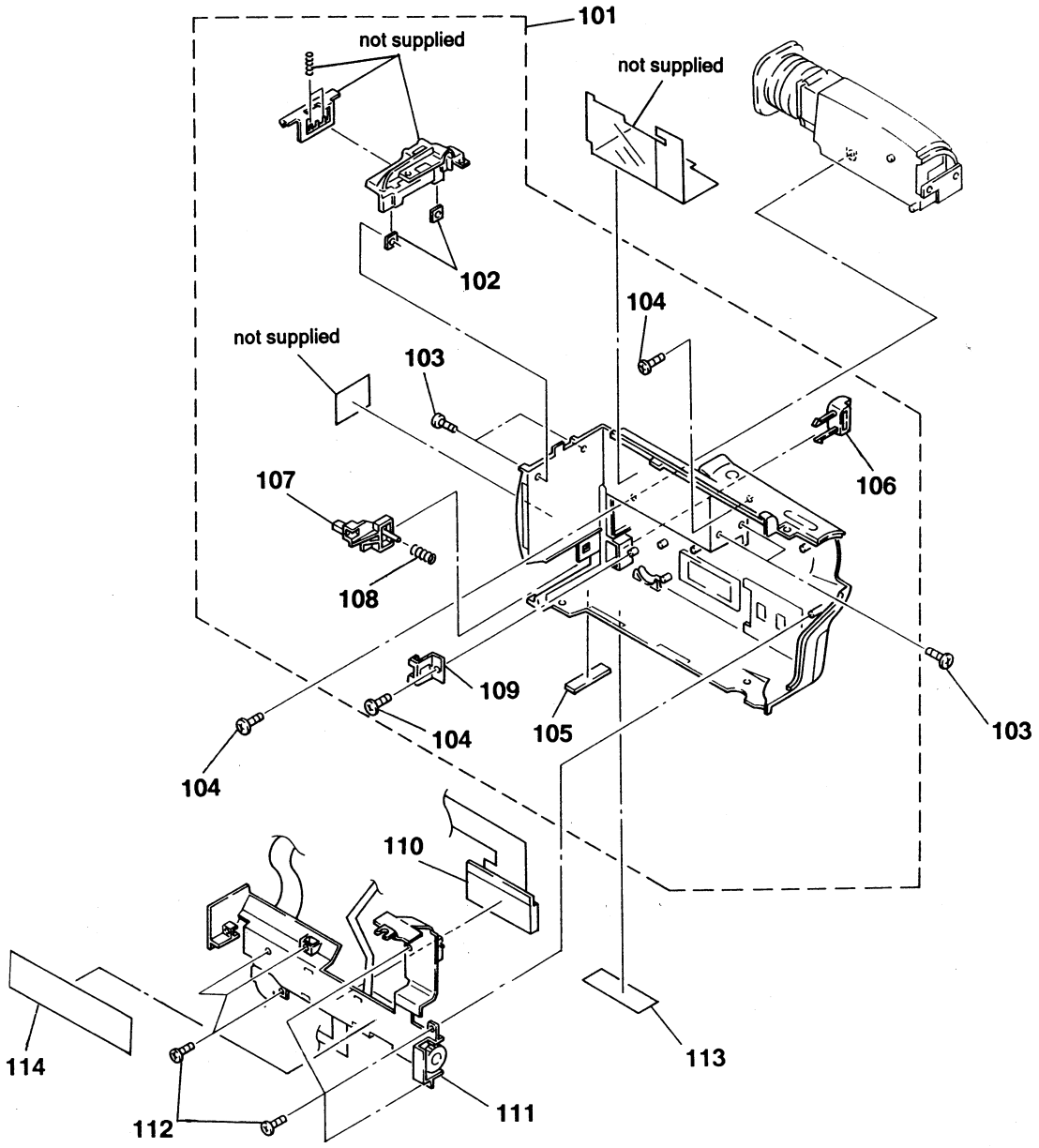

Ref. No.	Part No.	Description	Remark
101	X-3943-921-1	CABINET (R) ASSY (TR82)	
101	X-3943-926-1	CABINET (R) ASSY (TR72/TR80/TR430)	
101	X-3944-036-1	CABINET (R) ASSY (TR70)	
101	X-3944-090-1	CABINET (R) ASSY (TR42)	
101	X-3944-110-1	CABINET (R) ASSY (TR550)	
101	X-3944-111-1	CABINET (R) ASSY (H)(TR400)	
101	X-3944-113-1	CABINET (R) ASSY (H)(TR750)	
102	3-718-233-01	NUT, PLATE	
103	3-719-381-01	SCREW (M2X4)	
104	3-719-601-01	SCREW (B2X5), TAPPING	
105	3-949-008-01	SHEET, FOOT	
106	3-958-618-01	BUTTON, BATTERY RELEASE	
107	3-958-620-01	CLAW, BATTERY LOCK	
108	3-426-508-00	SPRING, COMPRESSION	
109	3-958-650-01	RETAINER, BATTERY RELEASE	
110	1-810-535-11	DISPLAY PANEL, LIQUID CRYSTAL (TR400/TR750)	
111	1-467-676-11	SWITCH BLOCK, CONTROL (CK) (TR42/TR82/TR550)	
111	1-467-676-21	SWITCH BLOCK, CONTROL (CK) (TR70/TR72/TR80/TR430)	
111	1-467-676-41	SWITCH BLOCK, CONTROL (CK)(TR400/TR750)	
112	3-948-339-01	SCREW (BTP)(2X5), HEAD	
* 113	3-958-586-01	LABEL, MODEL NUMBER (72)(TR72)	
* 113	3-958-638-01	LABEL, MODEL NUMBER (82)(TR82)	
* 113	3-958-973-01	LABEL, MODEL NUMBER (80)(TR80)	
* 113	3-958-974-01	LABEL, MODEL NUMBER (70)(TR70)	
* 113	3-959-117-01	LABEL, MODEL NUMBER (42)(TR42)	
* 113	3-959-123-01	LABEL, MODEL NUMBER (550)(TR550)	
* 113	3-959-124-01	LABEL, MODEL NUMBER (430)(TR430)	
* 113	3-959-126-01	LABEL, MODEL NUMBER (400)(TR400)	
* 113	3-959-129-01	LABEL, MODEL NUMBER (750)(TR750)	
* 114	3-959-615-01	CUSHION (CK)	

5-1-3. CABINET (R) BLOCK ASSEMBLY

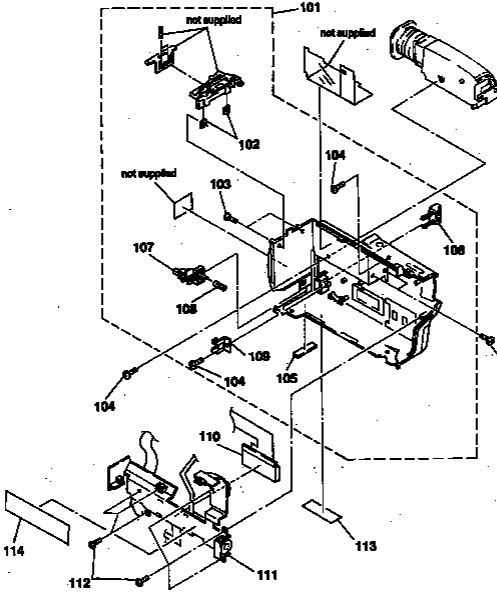

Ref.No.	Part No.	Description	Remark
101	X-3943-921-1	CABINET (R) ASSY (TR82)	
101	X-3943-926-1	CABINET (R) ASSY (TR72/TR80/TR4SS)	
101	X-3944-035-1	CABINET (R) ASSY (TR70)	
101	X-3944-080-1	CABINET (R) ASSY (TR42)	
101	X-3944-110-1	CABINET (R) ASSY (TR550)	
101	X-3944-111-1	CABINET (R) ASSY (R)(TR400)	
101	X-3944-113-1	CABINET (R) ASSY (R)(TR750)	
102	3-718-233-01	NUT, PLATE	
103	3-719-881-01	SCREW (M3X4)	
104	3-719-801-01	SCREW (B2X5), TAPPING	
105	3-949-908-01	SHEET, FOOT	
106	3-958-818-01	BUTTON, BATTERY RELEASE	
107	3-958-821-01	CLAW, BATTERY LOCK	
108	3-426-508-00	SPRING, COMPRESSION	
109	3-958-860-01	RETAINER, BATTERY RELEASE	
110	1-810-535-11	DISPLAY PANEL, LIQUID CRYSTAL (TR400/TR750)	
111	1-467-676-11	SWITCH BLOCK, CONTROL (CK) (TR42/TR82/TR550)	
111	1-467-676-21	SWITCH BLOCK, CONTROL (CK) (TR70/TR72/TR80/TR4SS)	
111	1-467-676-41	SWITCH BLOCK, CONTROL (CK)(TR400/TR750)	
112	3-948-889-01	SCREW (BTP)(2X5), HEAD	
* 113	3-958-588-01	LABEL, MODEL NUMBER (72)(TR72)	
* 113	3-958-838-01	LABEL, MODEL NUMBER (82)(TR82)	
* 113	3-958-873-01	LABEL, MODEL NUMBER (80)(TR80)	
* 113	3-958-874-01	LABEL, MODEL NUMBER (70)(TR70)	
* 113	3-958-117-01	LABEL, MODEL NUMBER (42)(TR42)	
* 113	3-959-123-01	LABEL, MODEL NUMBER (550)(TR550)	
* 113	3-959-124-01	LABEL, MODEL NUMBER (4SS)(TR4SS)	
* 113	3-958-128-01	LABEL, MODEL NUMBER (400)(TR400)	
* 113	3-958-129-01	LABEL, MODEL NUMBER (750)(TR750)	
* 114	3-958-815-01	CUSHION (CK)	

5-1-4. EVF BLOCK ASSEMBLY

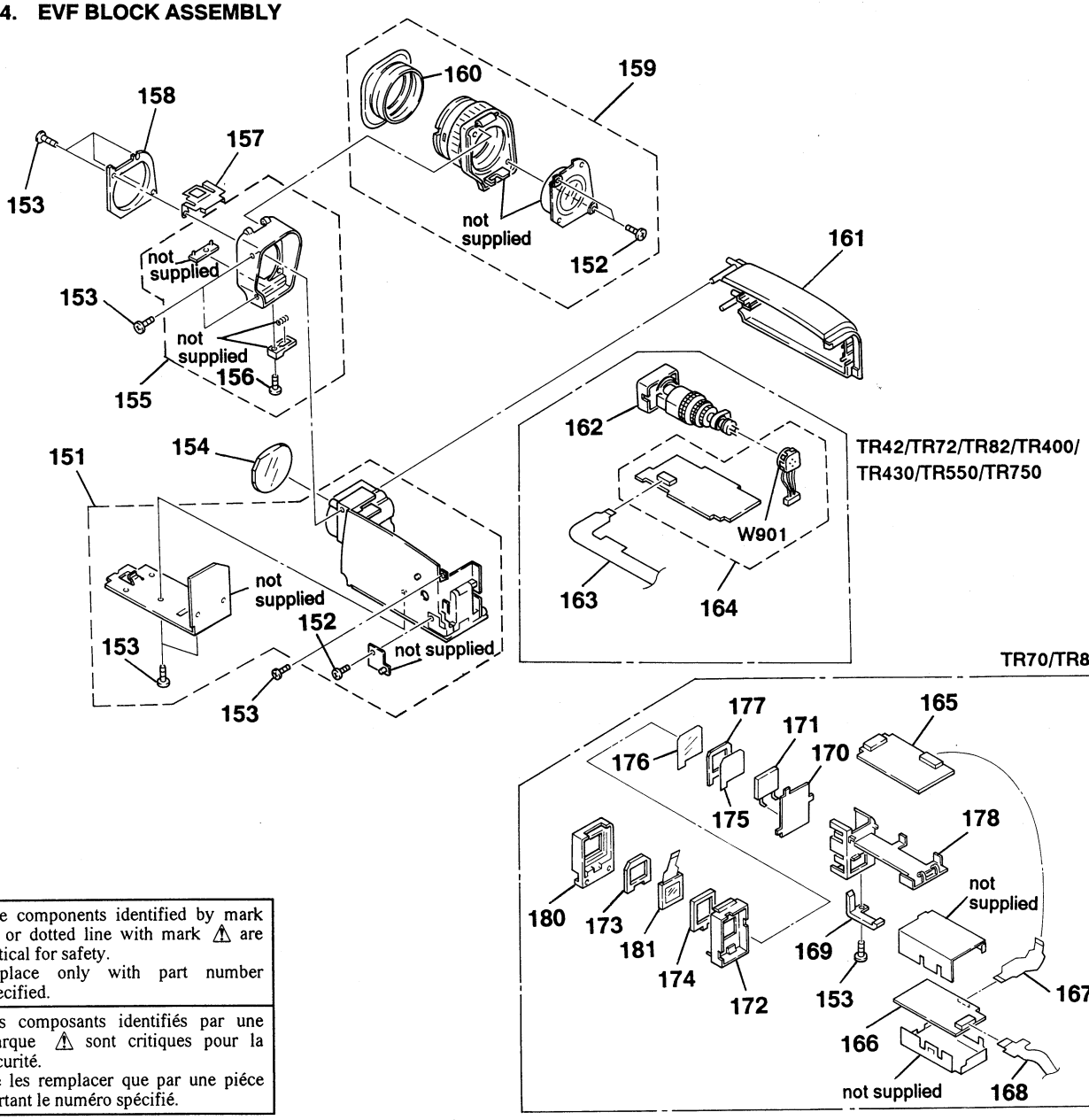

The components identified by mark ⚠ or dotted line with mark ⚠ are critical for safety. Replace only with part number specified.	
Les composants identifiés par une marque ⚠ sont critiques pour la sécurité. Ne les remplacer que par une piéce portant le numéro spécifié.	

Ref. No.	Part No.	Description	Remark
151	X-3943-930-1	CABINET (L) ASSY, EVF (TR42/TR72/TR82/TR400/TR430/TR550/TR750)	
151	X-3944-004-1	CABINET (L) ASSY, EVF (TR70/TR80)	
152	3-713-791-51	SCREW (M1.7X3.5), TAPPING, P2	
153	3-948-339-01	SCREW (BTP)(2X5), HEAD	
154	3-958-627-01	LENS (1), VF	
155	A-7082-596-A	HOLDER (1) BLOCK ASSY, FINDER (TR42/TR72/TR82/TR400/TR430/TR550/TR750)	
155	A-7082-625-A	HOLDER (1) BLOCK ASSY, FINDER (TR70/TR80)	
156	3-958-217-01	SCREW (M2)	
157	3-958-629-01	SPRING, LEAF	
158	3-958-628-01	HOLDER (1), LENS	
159	A-7082-595-A	HOLDER (2) BLOCK ASSY, FINDER	
160	3-958-597-01	EYE CUP	
161	3-958-592-01	CABINET (R), EVF (TR42/TR72/TR82/TR400/TR430/TR550/TR750)	
161	3-958-592-11	CABINET (R), EVF (TR70/TR80)	
⚠162	1-452-673-11	CRT ASSY (M01KXX90WB) (TR42/TR72/TR82/TR400/TR430/TR550/TR750)	
163	1-651-894-11	FP-86 FLEXIBLE BOARD (TR42/TR72/TR82/TR400/TR430/TR550/TR750)	
* 164	A-7063-957-A	VF-65 BOARD, COMPLETE (TR42/TR72/TR82/TR400/TR430/TR550/TR750)	
* 165	A-7066-011-A	VF-67 BOARD, COMPLETE (TR70/TR80)	
* 166	A-7066-010-A	VF-66 BOARD, COMPLETE (TR70/TR80)	
167	1-651-903-11	FP-92 FLEXIBLE BOARD (TR70/TR80)	
168	1-651-893-11	FP-85 FLEXIBLE BOARD (TR70/TR80)	
169	3-958-969-01	CHIP (LCD), TALLY (TR70/TR80)	
* 170	A-7056-012-A	LB-35 BOARD, COMPLETE (TR70/TR80)	
171	1-517-325-11	LANP, FLUORESCENT (0.55 INCH)(TR70/TR80)	
172	3-958-962-01	COVER, BL (TR70/TR80)	
* 173	3-958-963-01	CUSHION (1)(TR70/TR80)	
* 174	3-958-964-01	CUSHION (2)(TR70/TR80)	
175	3-958-965-01	PLATE, CONDENCE, BL (TR70/TR80)	
176	3-958-966-01	ILLUMINATOR, BL (TR70/TR80)	
* 177	3-958-967-01	CUSHION (3)(TR70/TR80)	
178	3-958-968-01	HOLDER (TR70/TR80)	
180	3-958-975-01	COVER, LCD (TR70/TR80)	
181	8-753-015-00	LCX005AK-1 (TR70/TR80)	
W901	1-540-019-21	SOCKET ASSY, CRT (TR42/TR72/TR82/TR400/TR430/TR550/TR750)	

5-1-4. EVF BLOCK ASSEMBLY

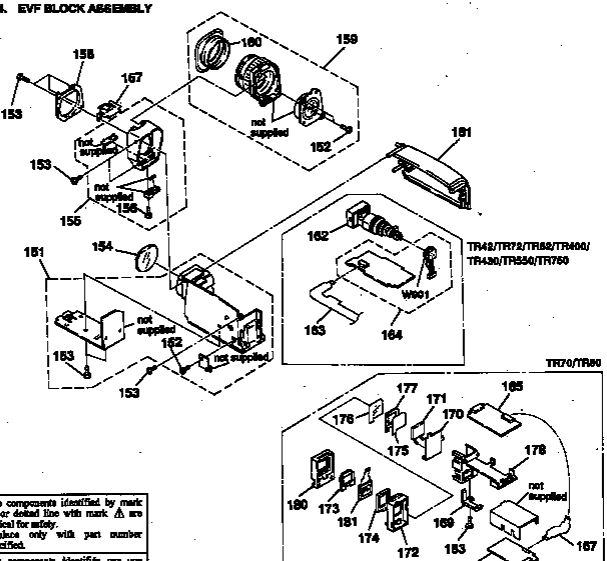

The components identified by mark ⚠ or dotted line with mark ⚠ are critical for safety. Replace only with part number specified.	Les composants identifiés par une marque ⚠ sont critiques pour la sécurité. Ne les remplacer que par une pièce portant le numéro spécifié.

Ref. No.	Part No.	Description	Remark
151	X-3943-980-1	CABINET (L) ASSY, EVF (TR42/TR72/TR82/TR400/TR430/TR550/TR750)	
151	X-3944-004-1	CABINET (L) ASSY, EVF (TR70/TR80)	
152	3-718-791-51	SCREW (BT, TX3, S), TAPPING, P2	
153	3-949-639-01	SCREW (BTP)(ZZG), BRAD	
154	3-858-627-01	LENS (1), VF	
155	A-7082-995-A	HOLDER (1) BLOCK ASSY, FINDER (TR42/TR72/TR82/TR400/TR430/TR550/TR750)	
155	A-7082-835-A	HOLDER (1) BLOCK ASSY, FINDER (TR70/TR80)	
156	3-958-217-01	SCREW (BR)	
157	3-958-828-01	SPRING, LEAF	
158	3-958-826-01	HOLDER (1), LENS	
159	A-7082-586-A	HOLDER (2) BLOCK ASSY, FINDER	
160	3-958-597-01	EYE CUP	
161	3-868-602-01	CABINET (R), EVF (TR42/TR72/TR82/TR400/TR430/TR550/TR750)	
161	3-868-602-11	CABINET (R), EVF (TR70/TR80)	
⚠162	1-452-673-11	CRT ASSY (M01KXX90VB) (TR42/TR72/TR82/TR400/TR430/TR550/TR750)	
163	1-651-894-11	FP-86 FLEXIBLE BOARD (TR42/TR72/TR82/TR400/TR430/TR550/TR750)	
* 164	A-7062-957-A	VF-85 BOARD, COMPLETE (TR42/TR72/TR82/TR400/TR430/TR550/TR750)	
* 165	A-7066-011-A	VF-67 BOARD, COMPLETE (TR70/TR80)	
* 166	A-7066-010-A	VF-66 BOARD, COMPLETE (TR70/TR80)	
167	1-651-903-11	FP-88 FLEXIBLE BOARD (TR70/TR80)	
168	1-651-898-11	FP-85 FLEXIBLE BOARD (TR70/TR80)	
169	3-958-969-01	CHIP (LCD), TALLY (TR70/TR80)	
* 170	A-7058-818-A	LB-85 BOARD, COMPLETE (TR70/TR80)	
171	1-517-329-11	LAMP, FLUORESCENT (0.55 INCH)(TR70/TR80)	
172	3-958-962-01	COVER, EL (TR70/TR80)	
* 173	3-958-963-01	CUSHION (1)(TR70/TR80)	
* 174	3-958-964-01	CUSHION (2)(TR70/TR80)	
175	3-958-965-01	PLATE, CONDENSER, EL (TR70/TR80)	
176	3-958-966-01	ILLUMINATOR, EL (TR70/TR80)	
* 177	3-958-967-01	CUSHION (3)(TR70/TR80)	
178	3-958-968-01	HOLDER (TR70/TR80)	
180	3-958-975-01	COVER, LCD (TR70/TR80)	
181	8-753-016-00	LCD(0.55M-1 (TR70/TR80)	
W901	1-540-019-21	SOCKET ASSY, CRT (TR42/TR72/TR82/TR400/TR430/TR550/TR750)	

5-1-5. MAIN BOARDS ASSEMBLY

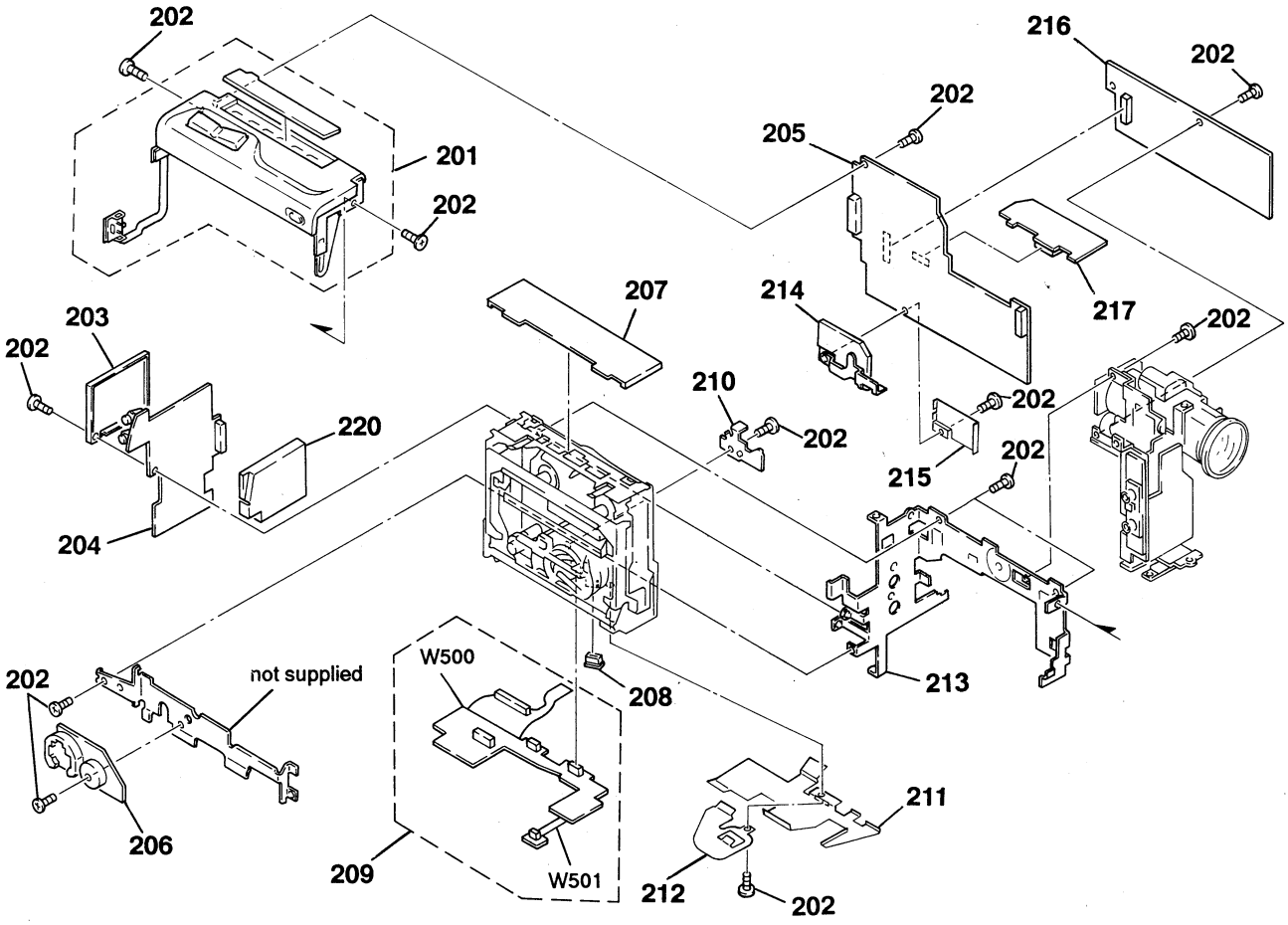

Ref. No.	Part No.	Description	Remark
201	1-467-649-12	SWITCH BLOCK, CONTROL (FK) (TR42/TR70/TR72/TR80/TR82/TR430/TR550)	
201	1-467-649-31	SWITCH BLOCK, CONTROL (FK)(TR400/TR750)	
202	3-713-786-21	SCREW (M2X3)	
* 203	3-958-925-01	CASE (MAIN), SHIELD, DD	
* 204	A-7063-954-A	DD-66 BOARD, COMPLETE (TR42/TR82/TR550)	
* 204	A-7063-960-A	DD-60 BOARD, COMPLETE (TR72/TR400/TR430/TR750)	
* 204	A-7066-006-A	DD-66 BOARD, COMPLETE (TR70)	
* 204	A-7066-009-A	DD-60 BOARD, COMPLETE (TR80)	
* 205	A-7063-953-A	VS-112 BOARD, COMPLETE (TR82)	
* 205	A-7063-959-A	VS-104 BOARD, COMPLETE (TR72)	
* 205	A-7066-008-A	VS-104 BOARD, COMPLETE (TR80)	
* 205	A-7066-019-A	VS-112 BOARD, COMPLETE (TR70)	
* 205	A-7066-047-A	VS-112 (LL) BOARD, COMPLETE (TR42)	
* 205	A-7066-079-A	VS-104 (H) BOARD, COMPLETE (TR400)	
* 205	A-7066-085-A	VS-112 BOARD, COMPLETE (TR550)	
* 205	A-7066-086-A	VS-104 BOARD, COMPLETE (TR430)	
* 205	A-7066-134-A	VS-104 (H) BOARD, COMPLETE (TR750)	
* 206	A-7072-002-A	ZB-2 BOARD, COMPLETE	
207	3-958-341-01	COVER, LS	
208	1-691-471-11	CONNECTOR, TRANSLATION 11P	
* 209	A-7072-000-A	SL-38 BOARD, COMPLETE	
* 210	3-958-667-01	FRAME (B)	
* 211	3-958-928-01	PLATE, SHIELD, RP	
212	1-651-891-11	FP-52 FLEXIBLE BOARD (TR42/TR70/TR72/TR80/TR82/TR430/TR550)	
212	1-651-892-11	FP-53 FLEXIBLE BOARD (TR400/TR750)	
* 213	3-958-345-01	FRAME (U)	
* 214	X-3943-976-1	SHIELD (MAIN) ASSY, RP	
* 215	3-958-924-01	CASE (LID)), SHIELD, RP	
* 216	A-7063-955-A	VC-145 BOARD, COMPLETE (TR82)	
* 216	A-7063-961-A	VC-138 BOARD, COMPLETE (TR72/TR430)	
* 216	A-7066-007-A	VC-145 BOARD, COMPLETE (TR70)	
* 216	A-7066-018-A	VC-138 BOARD, COMPLETE (TR80)	
* 216	A-7066-080-A	VC-138 BOARD, COMPLETE (TR400/TR750)	
* 216	A-7066-084-A	VC-145 BOARD, COMPLETE (TR42)	
* 216	A-7066-088-A	VC-145 BOARD, COMPLETE (TR550)	
217	A-7066-078-A	HE-14 BOARD, COMPLETE (TR400/TR750)	
220	X-3944-169-1	SHIELD (LID) ASSY, DD	
W500	1-651-889-11	FP-48 (SL) FLEXIBLE BOARD	
W501	1-642-186-11	FP-437 FLEXIBLE BOARD	

5-1-5. MAIN BOARD ASSEMBLY

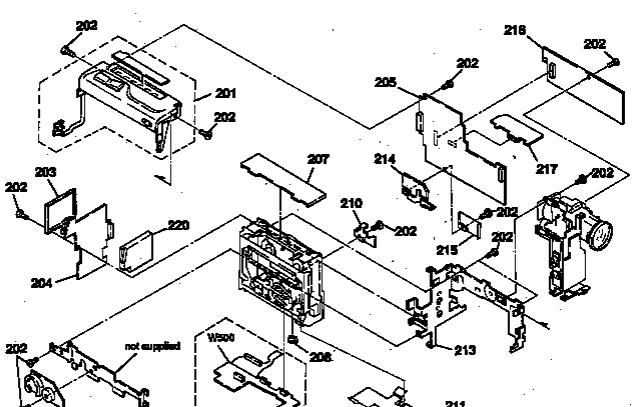

Ref.No.	Part No.	Description	Remark
201	1-487-649-12	SWITCH BLOCK, CONTROL (PX) (TR48/TR70/TR72/TR80/TR82/TR430/TR550)	
201	1-487-649-31	SWITCH BLOCK, CONTROL (PX) (TR400/TR750)	
202	3-715-786-21	SCREW (M2X3)	
* 203	3-958-925-01	CASE (MAIN), SHIELD, DD	
* 204	A-7063-954-A	DD-86 BOARD, COMPLETE (TR48/TR82/TR550)	
* 204	A-7063-980-A	DD-80 BOARD, COMPLETE (TR72/TR400/TR430/TR750)	
* 204	A-7066-006-A	DD-86 BOARD, COMPLETE (TR70)	
* 204	A-7066-009-A	DD-80 BOARD, COMPLETE (TR80)	
* 205	A-7063-963-A	VS-112 BOARD, COMPLETE (TR48)	
* 205	A-7063-959-A	VS-104 BOARD, COMPLETE (TR72)	
* 205	A-7066-058-A	VS-104 BOARD, COMPLETE (TR80)	
* 205	A-7066-019-A	VS-112 BOARD, COMPLETE (TR70)	
* 205	A-7069-047-A	VS-112 (LL) BOARD, COMPLETE (TR82)	
* 205	A-7066-078-A	VS-104 (H) BOARD, COMPLETE (TR430)	
* 205	A-7066-085-A	VS-112 BOARD, COMPLETE (TR550)	
* 205	A-7066-086-A	VS-104 BOARD, COMPLETE (TR430)	
* 205	A-7066-184-A	VS-104 (H) BOARD, COMPLETE (TR750)	
* 206	A-7072-005-A	ZS-2 BOARD, COMPLETE	
207	3-958-941-01	COVER, LS	
208	1-681-471-11	CONNECTOR, TRANSLATION 11P	
* 209	A-7072-000-A	SJ-38 BOARD, COMPLETE	
* 210	3-958-987-01	FRAME (D)	
* 211	3-958-928-01	PLATE, SHIELD, RP	
212	1-651-891-11	FP-52 FLEXIBLE BOARD (TR42/TR70/TR72/TR80/TR82/TR430/TR550)	
212	1-651-892-11	FP-53 FLEXIBLE BOARD (TR400/TR750)	
* 213	3-958-945-01	FRAME (U)	
* 214	X-3945-976-1	SHIELD (MAIN) ASSY, RP	
* 215	3-958-924-01	CASE (LID)), SHIELD, RP	
* 215	A-7063-965-A	VC-145 BOARD, COMPLETE (TR82)	
* 216	A-7063-961-A	VC-138 BOARD, COMPLETE (TR75/TR430)	
* 216	A-7066-027-A	VC-145 BOARD, COMPLETE (TR70)	
* 216	A-7066-119-A	VC-138 BOARD, COMPLETE (TR80)	
* 216	A-7066-060-A	VC-138 BOARD, COMPLETE (TR400/TR750)	
* 216	A-7066-064-A	VC-145 BOARD, COMPLETE (TR42)	
* 216	A-7066-088-A	VC-145 BOARD, COMPLETE (TR550)	
217	A-7066-078-A	ES-14 BOARD, COMPLETE (TR400/TR750)	
220	X-3945-169-1	SHIELD (LID) ASSY, DD	
W500	1-651-889-11	FP-46 (SL) FLEXIBLE BOARD	
W501	1-643-188-11	FP-437 FLEXIBLE BOARD	

5-1-6. CCD BLOCK ASSEMBLY

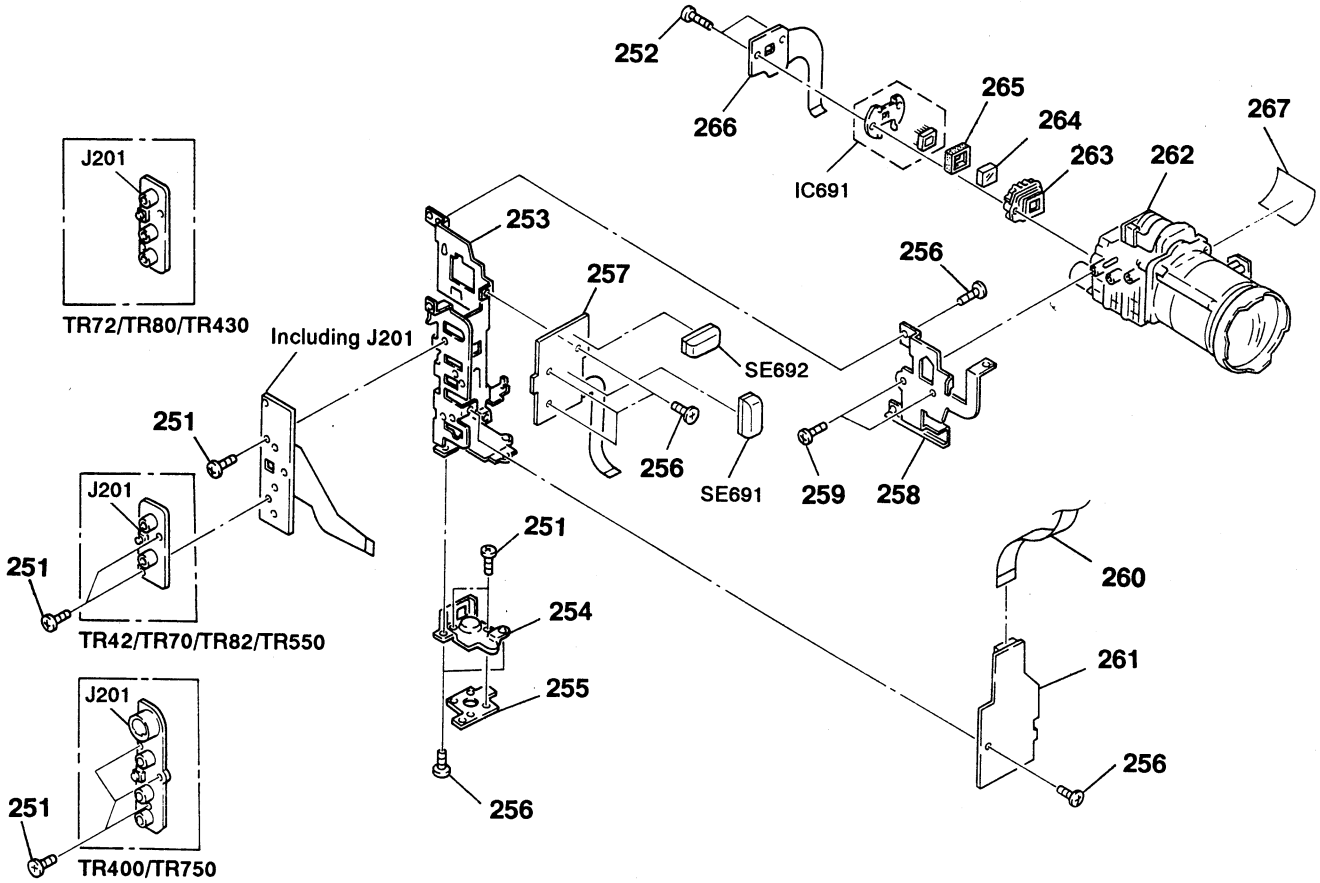

Be sure to read "Note on the CCD Imager replacement" on page 4-6 when changing the CCD imager.

Ref. No.	Part No.	Description	Remark
251	3-719-381-01	SCREW (M2X4)	
252	3-947-268-01	SCREW (B TIGHT)(2), TAPPING	
* 253	3-958-587-01	FRAME (PJ)	
254	3-958-310-11	HOLDER, TRIPOD	
255	3-958-286-01	SHEET METAL, TRIPOD	
256	3-713-786-21	SCREW (M2X3)	
257	1-651-890-11	FP-49 FLEXIBLE BOARD	(TR82/TR400/TR550/TR750)
* 258	3-958-666-01	FRAME (L)	
259	3-948-339-01	SCREW (BTP)(2X5), HEAD	
260	1-765-361-11	CABLE, FLAT (FFC-115)	(TR72/TR80/TR400/TR430/TR750)
260	1-765-362-11	CABLE, FLAT (FFC-134)	(TR42/TR70/TR82/TR550)
* 261	A-7063-952-A	AU-169 BOARD, COMPLETE	(TR42/TR70/TR82/TR550)
* 261	A-7063-958-A	AU-165 BOARD, COMPLETE	(TR72/TR80/TR400/TR430/TR750)
262	1-547-716-11	LENS, ZOOM (VCL-5412WA)(TYPE II)	
262	8-848-704-01	DEVICE, LENS LSV-140A (TYPE I)	
263	3-946-856-01	ADAPTOR (H), CCD FITTING	
264	1-547-529-21	FILTER BLOCK, OPTICAL	(TR82/TR400/TR550/TR750)
264	1-547-558-21	FILTER BLOCK, OPTICAL	(TR42/TR70/TR72/TR80/TR430)
265	3-946-857-01	RUBBER (S), SEAL	
* 266	A-7072-004-A	FP-89 (CD) BOARD, COMPLETE	(TR82/TR400/TR550/TR750)
* 266	A-7072-005-A	FP-89 (CD) BOARD, COMPLETE	(TR42/TR70/TR72/TR80/TR430)
* 267	3-959-368-01	CUSHION, CABINET (R)	(TR400/TR430/TR550/TR750)
J201	1-537-731-11	TERMINAL BOARD	(TR42/TR70/TR82/TR550)
J201	1-537-731-21	TERMINAL BOARD	(TR72/TR80/TR430)
J201	1-537-731-31	TERMINAL BOARD	(TR400/TR750)
IC691	A-7030-368-A	CCD BLOCK ASSY (AUTO)(054 SERVICE)	(CCD IMAGER)(TR42/TR70/TR72/TR80/TR430)
IC691	A-7030-373-A	CCD BLOCK ASSY (AUTO)(059V SERVICE)	(CCD IMAGER)(TR82/TR400/TR550/TR750)
SE691	1-810-024-31	SENSOR, ANGULAR VELOCITY (PITCH)	(TR82/TR400/TR550/TR750)
SE692	1-810-024-41	SENSOR, ANGULAR VELOCITY (YAW)	(TR82/TR400/TR550/TR750)

5-1-6. CCD BLOCK ASSEMBLY

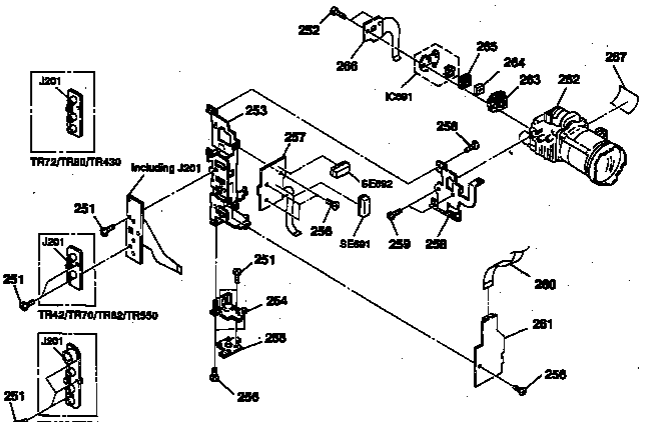

Be sure to read "Note on the CCD imager replacement" on page 4-6 when changing the CCD imager.

Ref. No.	Part No.	Description	Remark
251	3-719-881-01	SCREW (M2X4)	
252	3-847-288-01	SCREW (B TIGHT)(2), TAPPING	
* 253	3-958-587-01	FRAME (F)()	
254	3-969-810-11	HOLDER, TRIPOD	
255	3-958-286-01	SHEET METAL, TRIPOD	
256	3-713-785-21	SCREW (M2X3)	
257	1-651-890-11	FP-49 FLEXIBLE BOARD (TR42/TR400/TR550/TR750)	
* 258	3-958-588-01	FRAME (L)	
259	3-948-899-01	SCREW (BTP)(2)(L), HEAD	
260	1-785-341-11	CABLE, FLAT (FPC-11S) (TR72/TR80/TR400/TR430/TR750)	
261	1-785-343-11	CABLE, FLAT (FPC-15A) (TR42/TR70/TR82/TR550)	
* 261	A-7068-958-A	AU-189 BOARD, COMPLETE (TR42/TR70/TR82/TR550)	
* 261	A-7063-958-A	AU-185 BOARD, COMPLETE (TR72/TR80/TR400/TR430/TR750)	
262	1-547-716-11	LENS, ZOOM (VCL-5412WA)(TYPE II)	
263	3-948-764-01	DEVICE, LENS LSV-140A (TYPE I)	
264	1-547-589-21	FILTER BLOCK, OPTICAL (TR42/TR400/TR550/TR750)	
264	1-547-559-21	FILTER BLOCK, OPTICAL (TR42/TR70/TR72/TR80/TR430)	
265	3-948-857-01	RUBBER (S), SEAL	
* 266	A-7072-054-A	FP-85 (CD) BOARD, COMPLETE (TR42/TR400/TR550/TR750)	
* 266	A-7072-006-A	FP-88 (CD) BOARD, COMPLETE (TR42/TR70/TR72/TR80/TR430)	
* 267	3-958-588-01	CUSHION, CABINET (R) (TR400/TR430/TR550/TR750)	
J201	1-537-731-11	TERMINAL BOARD (TR42/TR70/TR82/TR550)	
J501	1-537-731-21	TERMINAL BOARD (TR72/TR80/TR430)	
J901	1-537-731-31	TERMINAL BOARD (TR400/TR750)	
IC691	A-7080-868-A	CCD BLOCK ASSY (AUTO)(054 SERVICE) (CCD IMAGER) (TR42/TR70/TR72/TR80/TR430)	
IC691	A-7090-873-A	CCD BLOCK ASSY (AUTO)(054F SERVICE) (CCD IMAGER) (TR82/TR400/TR550/TR750)	
SE691	1-810-024-31	SENSOR, ANGULAR VELOCITY (PITCH) (TR82/TR400/TR550/TR750)	
SE692	1-810-024-41	SENSOR, ANGULAR VELOCITY (YAW) (TR82/TR400/TR550/TR750)	

5-1-7. ZOOM LENS ASSEMBLIES (LSV-140A) (VCL-5412WA)

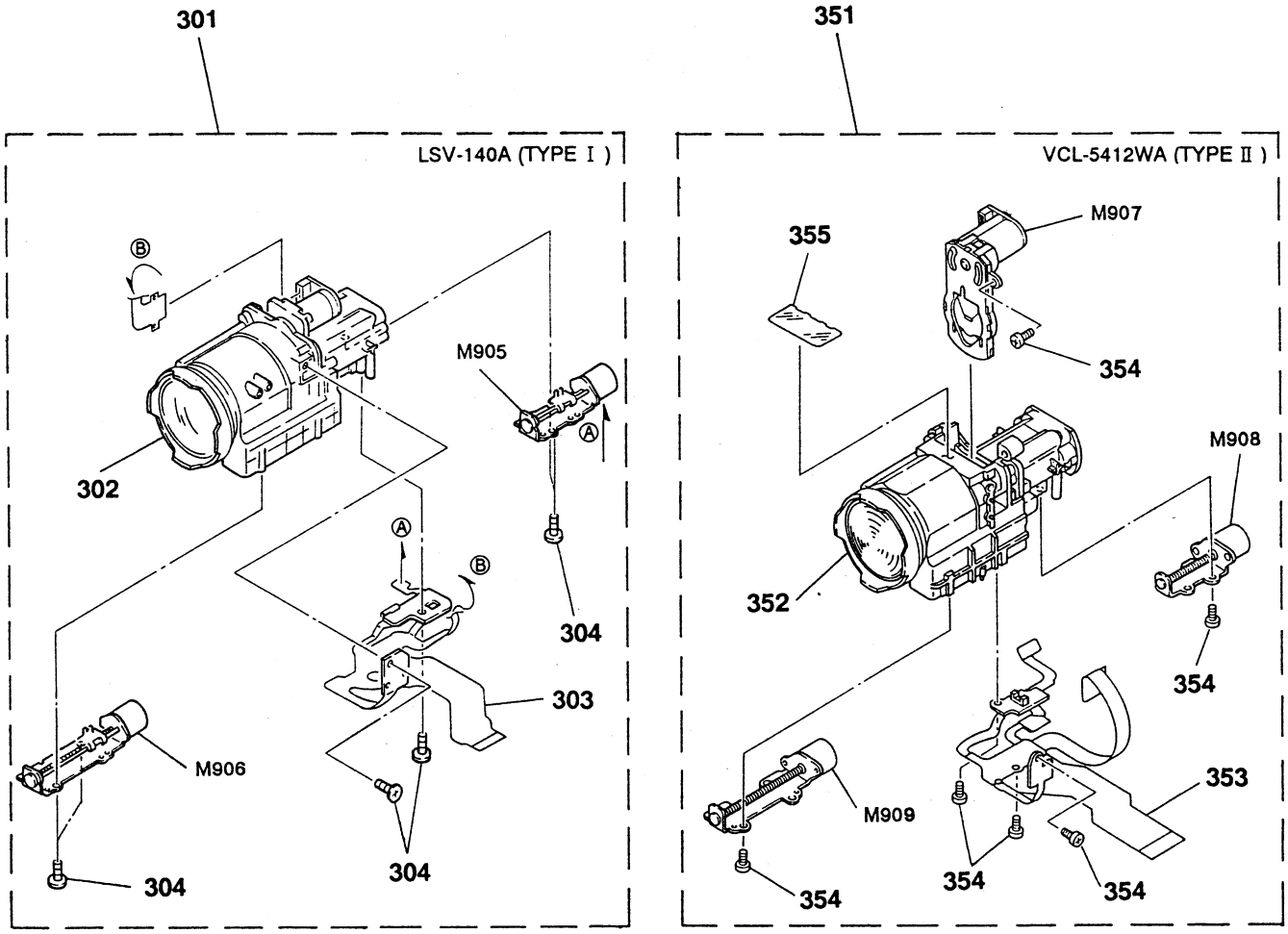

TYPE I

Ref. No.	Part No.	Description	Remark
301	8-848-704-01	DEVICE, LENS (LSV-140A)(TYPE I)	
302	A-4910-598-A	DEVICE ASSY, LSV-140A (RP)	
303	A-4915-338-A	FLEXIBLE, MOUNT	
304	3-713-791-41	SCREW (M1.7X5), TAPPING, P2	
M905	1-698-364-01	MOTOR ASSY, FOCUS	
M906	1-698-363-01	MOTOR ASSY, ZOOM	

TYPE II

Ref. No.	Part No.	Description	Remark
351	1-547-716-11	LENS, ZOOM (VCL-5412WA)(TYPE II)	
352	3-708-891-01	DEVICE ASSY	
353	3-708-890-01	FLEXIBLE BOARD, MAIN	
354	3-708-302-01	SCREW (BT3 P1.7X4C)	
355	3-708-886-01	COVER, IG	
M907	3-708-888-01	METER, IG	
M908	3-708-889-01	MOTOR ASSY, FOCUS	
M909	3-708-887-01	MOTOR ASSY, ZOOM	

5-1-7. ZOOM LENS ASSEMBLIES (LSV-140A) (VCL-5412WA)

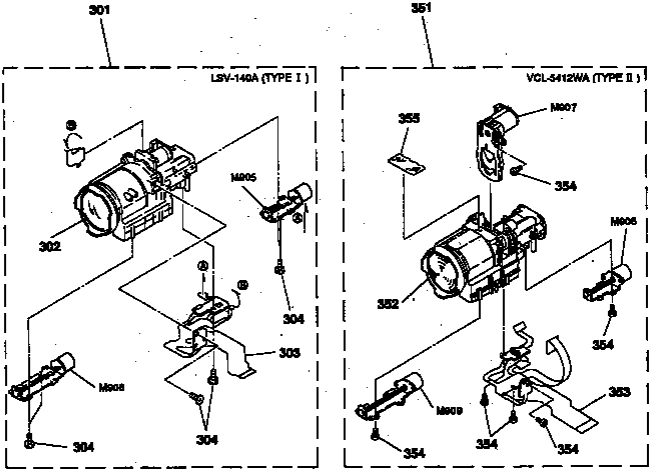

TYPE I

Ref. No.	Part No.	Description	Remark
301	8-848-704-01	DEVICE, LENS (LSV-140A) (TYPE I)	
302	A-4810-598-A	DEVICE ASSY, LSV-140A (EP)	
303	A-4815-888-A	FLEXIBLE, MOUNT	
304	3-713-781-41	SCREW (M2.TZ3), TAPPING, P2	
M905	1-698-384-01	MOTOR ASSY, FOCUS	
M908	1-698-382-01	MOTOR ASSY, ZOOM	

TYPE II

Ref. No.	Part No.	Description	Remark
351	1-547-716-11	LENS, ZOOM (VCL-5412WA) (TYPE II)	
352	8-768-401-01	DEVICE ASSY	
353	3-708-698-01	FLEXIBLE BOARD, MAIN	
354	3-708-302-01	SCREW (M3 P1.TX4C)	
355	3-708-699-01	COVER, IG	
M907	3-708-383-01	MOTOR, IG	
M906	3-708-349-01	MOTOR ASSY, FOCUS	
M909	3-708-687-01	MOTOR ASSY, ZOOM	

5-1-8. CASSETTE COMPARTMENT ASSEMBLY

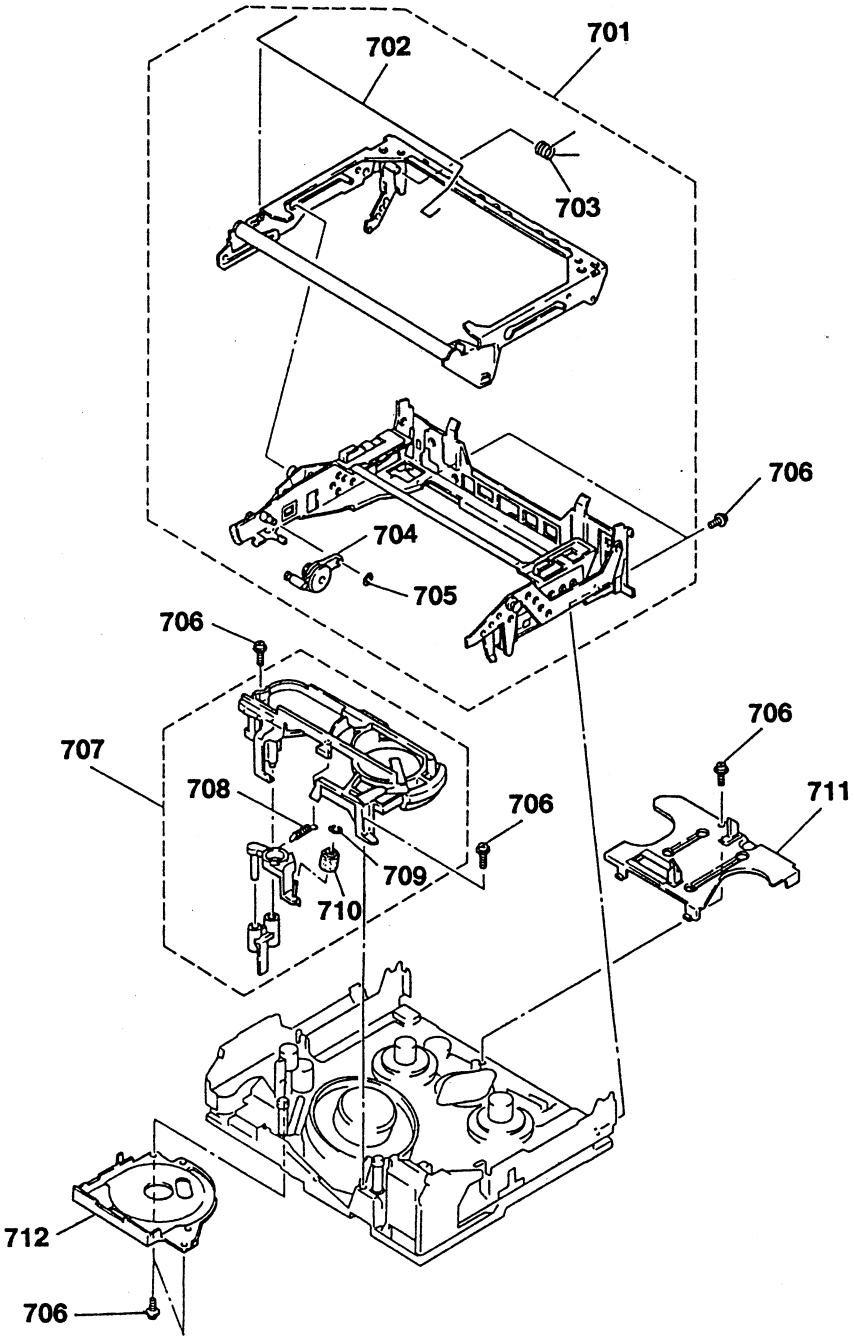

Ref. No.	Part No.	Description	Remark
701	A-7040-312-K	CASSETTE COMPARTMENT BLOCK ASSY	
702	3-945-773-01	BAR, TORSION	
703	3-945-771-01	SPRING, TORSION	
704	X-3941-287-2	DAMPER ASSY	
705	3-315-384-31	WASHER, STOPPER	
706	3-947-503-01	SCREW (M1.4X2.5)	
707	A-7040-309-A	PROTECT (BASE) BLOCK ASSY	
708	3-945-760-01	SPRING, TENSION	
709	3-321-393-01	WASHER, STOPPER	
710	X-3166-813-1	ROLLER ASSY, HC	
711	X-3941-280-1	RETAINER ASSY, GOOSENECK	
712	3-945-733-01	COVER, CAPSTAN	

5-1-8. CASSETTE COMPARTMENT ASSEMBLY

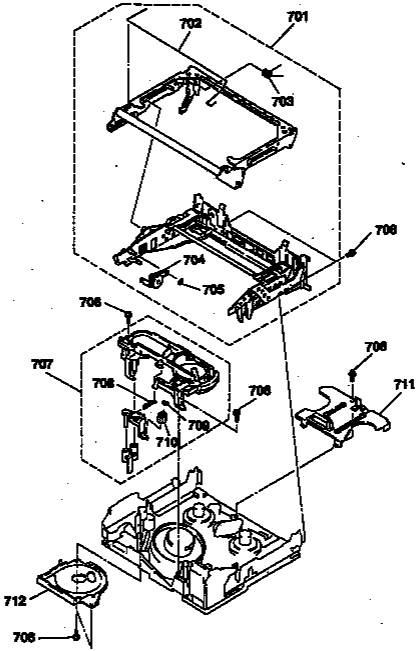

Ref.No.	Part No.	Description	Remark
701	A-7040-312-X	CASSETTE COMPARTMENT BLOCK ASSY	
702	3-945-773-01	BAR, TORSION	
703	3-945-771-01	SPRING, TORSION	
704	X-3941-287-2	DAMPER ASSY	
705	3-315-384-31	WASHER, STOPPER	
706	3-947-503-01	SCREW (BH, 4X2.5)	
707	A-7040-309-A	PROTECT (BASE) BLOCK ASSY	
708	3-945-790-01	SPRING, TORSION	
709	3-521-338-01	WASHER, STOPPER	
710	X-3186-919-1	ROLLER ASSY, HC	
711	X-3941-280-1	HOLDER ASSY, GOOSENECK	
712	3-945-793-01	COVER, CAPSTAN	

5-1-9. LS CHASSIS ASSEMBLY

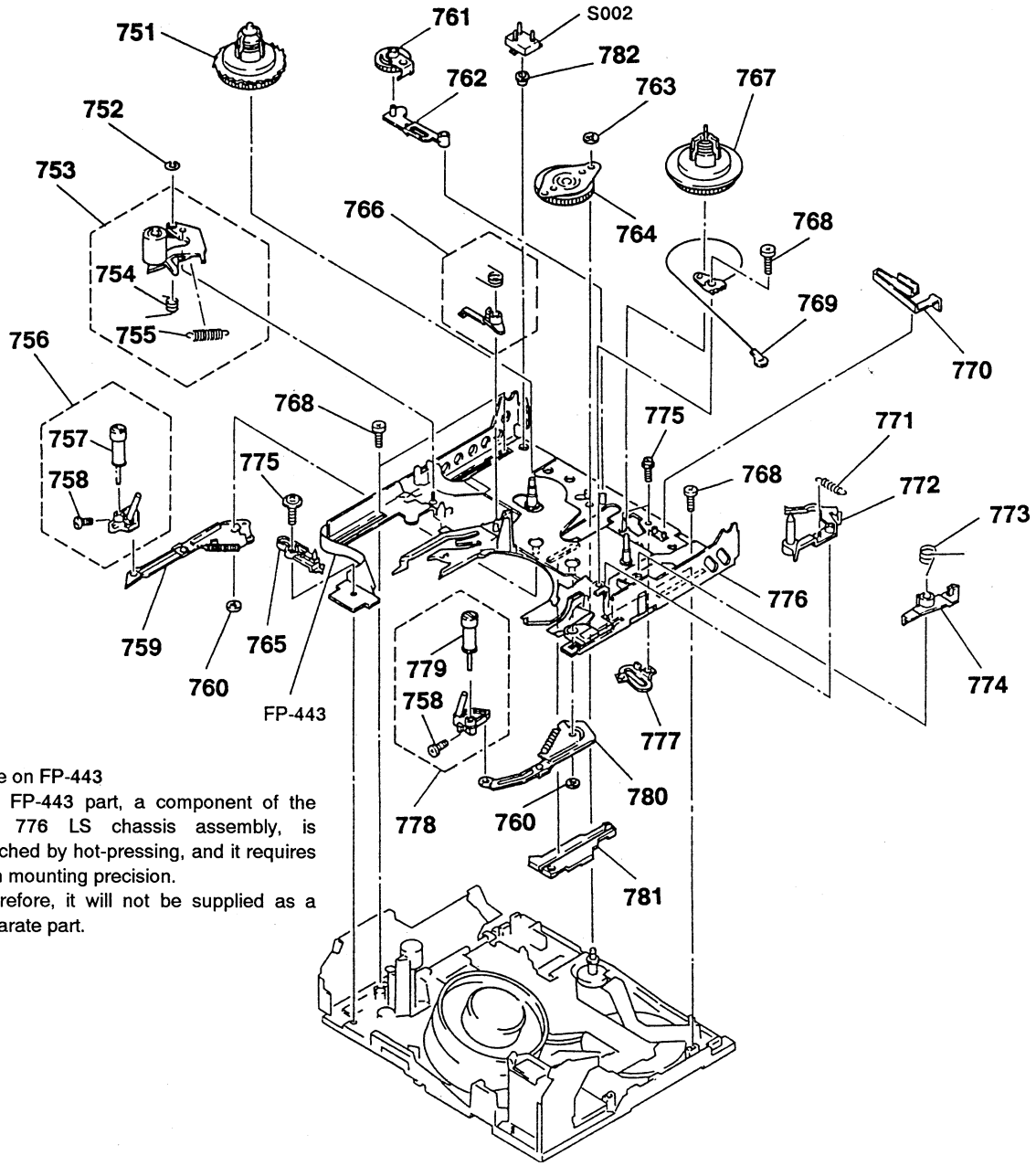

Note on FP-443
The FP-443 part, a component of the No. 776 LS chassis assembly, is attached by hot-pressing, and it requires high mounting precision.
Therefore, it will not be supplied as a separate part.

Ref. No.	Part No.	Description	Remark
751	X-3941-274-1	TABLE ASSY, REEL, T	
752	3-331-007-21	WASHER	
753	X-3941-271-5	ARM ASSY, PINCH	
754	3-945-743-01	SPRING, TORSION	
755	3-945-783-01	SPRING, TENSION	
756	A-7040-307-A	GUIDE (BASE)(T) BLOCK ASSY	
757	X-3941-424-1	ROLLER ASSY, TG6	
758	3-947-504-01	SCREW (M1.2X2)	
759	X-3941-267-1	ARM (T) ASSY, GUIDE	
760	3-669-465-00	WASHER (1.5), STOPPER	
761	X-3941-273-1	SOFT ASSY, T	
762	3-945-753-01	ARM, T SOFT	
763	3-726-829-01	WASHER, STOPPER	
764	X-3941-279-5	GEAR ASSY, GOOSENECK	
765	3-947-644-01	RETAINER, TG5 (BASE)	
766	A-7040-321-A	CLAW BLOCK ASSY, T HARD	
767	X-3943-676-1	TABLE ASSY, S REEL	
768	3-945-756-01	SCREW (M1.4X3)	
769	X-3941-277-1	STRING BLOCK ASSY	
770	3-945-801-01	BRAKE, S SOFT	
771	3-954-327-01	SPRING, TENSION	
772	X-3941-276-1	TG1 ASSY	
773	3-945-752-01	SPRING, TORSION	
774	3-945-799-01	BRAKE, S HARD	
775	3-947-503-01	SCREW (M1.4X2.5)	
776	X-3943-307-1	CHASSIS ASSY, LS	
777	3-945-784-01	PLATE, CAM, LS	
778	A-7040-306-A	GUIDE (BASE)(S) BLOCK ASSY	
779	X-3941-269-1	ROLLER ASSY, TG3	
780	X-3941-266-1	ARM (S) ASSY, GUIDE	
781	3-945-837-01	SLIDER, GL	
782	3-949-881-01	SLEEVE	
S002	1-572-987-11	SWITCH, PUSH (3 KEY) (REC PROOF, ME/MP, MP/MP-HG)	

5-1-9. LS CHASSIS ASSEMBLY

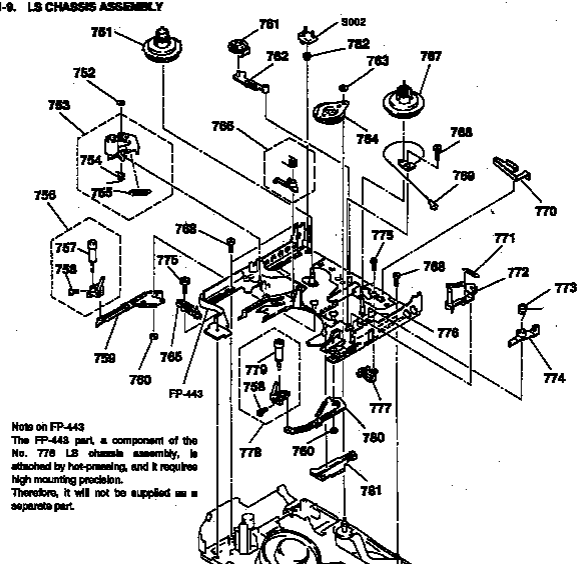

Note on FP-443
The FP-443 part, a component of the No. 776 LS chassis assembly, is attached by hot-pressing, and it requires high mounting precision.
Therefore, it will not be supplied as a separate part.

Ref.No.	Part No.	Description	Remark
751	X-3941-274-1	TABLE ASSY, REEL, T	
752	3-331-007-21	WASHER	
753	X-3941-271-5	ARM ASSY, PINCH	
754	3-945-743-01	SPRING, TORSION	
755	3-945-783-01	SPRING, TENSION	
756	A-7040-307-A	GUIDE (BASE)(T) BLOCK ASSY	
757	X-3941-424-1	ROLLER ASSY, 106	
758	3-947-504-01	SCREW (MC.2X2)	
759	X-3941-287-1	ARM (T) ASSY, GUIDE	
760	3-658-465-00	WASHER (1.5), STOPPER	
761	X-3941-273-1	SHIFT ASSY, T	
762	3-945-753-01	ARM, T SHFT	
763	3-726-829-01	WASHER, STOPPER	
764	X-3941-279-5	GEAR ASSY, GOOSENECK	
765	3-947-844-01	RETAINER, T25 (BASE)	
766	A-7040-321-A	CLAW BLOCK ASSY, T HARD	
767	X-3943-576-1	TABLE ASSY, S REEL	
768	3-945-758-01	SCREW (MC.4X8)	
769	X-3941-377-1	STOPPER BLOCK ASSY	
770	3-945-831-01	BRAKE, S SOFT	
771	3-954-327-01	SPRING, TENSION	
772	X-3941-376-1	YGG ASSY	
773	3-945-758-01	SPRING, TORSION	
774	3-945-799-01	BRAKE, S HARD	
775	3-947-503-01	SCREW (M1.4X2.5)	
776	X-3943-307-1	CHASSIS ASSY, LS	
777	3-945-784-01	PLATE, CAM, LS	
778	A-7040-350-A	GUIDE (BASE)(S) BLOCK ASSY	
779	X-3941-246-1	ROLLER ASSY, YGG	
780	X-3941-288-1	ARM (S) ASSY, GUIDE	
781	3-945-837-01	SLIDER, SL	
782	3-949-881-01	SLEEVE	
S002	1-572-887-11	SWITCH, PUSH (8 KEY) (REC PROOF, ME/MP, MF/MP-EG)	

6-1. CAMERA CONTROL MICRO PROCESSOR PIN FUNCTION (VC BOARD IC602: SC424608 MC68HC11MA8FU)

Pin No.	Signal Name	I/O	Function
1	VTR SI	I	Serial data input from mode control microprocessor (VS board IC503).
2	$\overline{\text{VTR SCK}}$	I	Serial data transfer clock from/to mode control microprocessor.
3	$\overline{\text{CAM CS}}$	I	Chip select signal from mode control microprocessor.
4			Not used.
5			
6			
7			
8			
9	PBV	I	V sync signal from servo/mechanism control microprocessor (VS board IC505).
10			Not used (connected to +3.6V).
11			
12	VDD		+3.6V power supply.
13	VSS		GND
14	$\overline{\text{CS TG}}$	O	Chip select signal to timing generator (IC702).
15			Not used (connected to +3.6V).
16	START	O	Operation signal of IC705. Normally "L". "H" during operation.
17	WEN	I	Write enable signal from timing generator (IC702). Normally "H".
18			Not used.
19	$\overline{\text{CS VST}}$	O	Chip select signal to steady shot control microprocessor (IC777).
20	$\overline{\text{CS CORE}}$	O	Chip select signal to camera core (IC609).
21	EEPROM BUSY	I	BUSY signal from EEPROM (IC601). Normally "H". "L" during data read/write.
22			Not used.
23	IRIS PWM	O	Iris control signal.
24			Not used.
25			
26	$\overline{\text{TESTX}}$	O	Test signal of IC705. "H": Camera mode, "L": Test/VTR mode.
27	LENS RST LED	O	Lens reset sensor LED ON/OFF. "H": ON, "L": OFF.
28	FC RST	I	Lens focus reset sensor signal input.
29	ZM RST	I	Lens zoom reset sensor signal input.
30	XIRQ		Connected to +3.6V.
31	VDD		+3.6V power supply.
32	VSS		GND
33			Not used.
34			
35			
36	$\overline{\text{CAM SCK}}$	O	Serial data transfer clock.
37	CAM SO	O	Serial data output.
38	CAM SI	I	Serial data input.
39			Not used.
40			

Pin No.	Signal Name	I/O	Function
41	VDD		+3.6V power supply.
42	GENERAL A/D	I	Camera core (IC609) discrimination signal input.
43	LENS TYPE	I	Lens type discrimination signal input.
44	ZOOM SW	I	Zoom key signal input. When not pressed: 1.8V, TELE 1: 2.7V, TELE 2: 3.6V, WIDE 1: 0.9V, WIDE 2: 0V.
45	MAN FOCUS (2)	I	Manual focus dial signal (2) input. 0V to 3.4V depending on the dial turning.
46	MAN FOCUS (1)	I	Manual focus dial signal (1) input. 0V to 3.4V depending on the dial turning.
47			Not used. Connected to GND.
48			
49	HALL A/D	I	Hall voltage. Approx. 1V (iris opened) to approx. 3.5V (iris closed).
50	VRL	I	Connected to GND.
51	VRH	I	Connected to +3.6V.
52	VSS		GND
53	$\overline{\text{CS EEPROM}}$	O	Chip select signal to EEPROM (IC601).
54	$\overline{\text{CS CAM OPD}}$	O	Chip select signal to OPD (IC611).
55	D/A STB	O	Strobe signal to camera EVR (IC603).
56	EEPROM RESET	O	EEPROM (IC601) write disable signal. Normally "H".
57	$\overline{\text{CS AF OPD}}$	O	Chip select signal to AF OPD (IC611).
58	$\overline{\text{CS PDR}}$	O	Chip select signal to pre-driver (IC753).
59	$\overline{\text{CAM ON}}$	O	A/D converter (IC704) ON/OFF signal. Normally "H".
60	$\overline{\text{NTSC}}$	O	"L": NTSC, "H": PAL.
61	IRQ	I	Connected to +3.6V.
62			Not used.
63			
64	$\overline{\text{PDR RST}}$	O	Reset signal to zoom/focus pre-driver (IC753). "H": Camera mode, "L": VTR mode.
65	$\overline{\text{NRML}}$/VST	O	"H": Steady shot operation, "L": Normal operation.
66	$\overline{\text{VST/CORE RST}}$	O	Reset signal to steady shot control microprocessor (IC777) and camera core (IC609). Normally "H". "L": Reset.
67	$\overline{\text{OPD RST}}$	O	Reset signal to IC611 and IC705. "H": Camera mode, "L": VTR mode.
68			Not used. Connected to GND.
69			
70	VSS		GND
71	VDD		+3.6V power supply.
72			Not used.
73	EXTAL	I	24 MHz clock oscillation circuit.
74	XTAL	O	
75	$\overline{\text{RESET}}$	I	Reset signal from mode control microprocessor (VS board IC503). Normally "H". "L": Reset.
76	MODB		Connected to +3.6V.
77	MODA		Connected to GND.
78	RXD		Not used.
79	TXD		
80	VTR SO	O	Serial data output to mode control microprocessor (VS board IC503).

6-1. CAMERA CONTROL MICRO PROCESSOR PIN FUNCTION (VC BOARD IC602: SC424608 MC68HC11MA8FU)

Pin No.	Signal Name	I/O	Function
1	VTR SI	I	Serial data input from main control microprocessor (VB board IC302).
2	VTR SCK	I	Sight data transfer clock from main control microprocessor.
3	CAM CS	I	Chip select signal from main control microprocessor.
4			Not used.
5			
6			
7			
8			
9	FDV	I	V sync signal from servo/mechanism control microprocessor (VB board IC202).
10			Not used (connected to +5.6V).
11			
12	VDD		+5.6V power supply.
13	VSS		GND
14	CPTU	O	Chip select signal to timing generator (IC703).
15			Not used (connected to +5.6V).
16	START	O	Operation signal of IC705. Normally "L". "H" during operation.
17	WEN	I	Write enable signal from timing generator (IC703). Normally "H".
18			Not used.
19	CS OFF	O	Chip select signal to steady shot control microprocessor (IC777).
20	CS CCD1	O	Chip select signal to camera core (IC606).
21	EEPROM SLEEP	I	SLEEP signal from EEPROM (IC601). Normally "H". "L" during data transferring.
22			Not used.
23	BBS PWM	O	Iris control signal.
24			Not used.
25			
26	VMTCK	O	Test signal of IC703. "H": Camera mode. "L": Test/VTR mode.
27	LENS SOT LED	O	Lens test sensor LED ON/OFF. "H": ON, "L": OFF.
28	PI RST	I	Lens focus zoom sensor signal input.
29	ZM RST	I	Lens zoom reset sensor signal input.
30	XTRO		Connected to +5.6V.
31	VDD		+5.6V power supply.
32	VSS		GND
33			Not used.
34			
35			
36	CAM SCK	O	Serial data transfer clock.
37	CAM SO	O	Serial data output.
38	CAM SI	I	Serial data input.
39			Not used.
40			

Pin No.	Signal Name	I/O	Function
41	VDD		+5.6V power supply.
42	GENERAL AD	I	Various case (IC602) electrolumine signal input.
43	LENS TYPE	I	Lens type discrimination signal input.
44	ZOOM SW	I	Zoom jump signal input. When not ground: 1.5V, TELE 1: 2.7V, TELE 2: 3.6V, WIDE 1: 0.9V, WIDE 2: 0V.
45	MAN FOCUS (2)	I	Manual focus dial signal (2) input. 0V to 3.4V depending on the dial turning.
46	MAN FOCUS (1)	I	Manual focus dial signal (1) input. 0V to 3.4V depending on the dial turning.
47			Not used. Connected to GND.
48			
49	HALL AD	I	Hall voltage. Approx. 1V (the upmost) to approx. 3.5V (the nearest).
50	VSL	I	Connected to GND.
51	VBH	I	Connected to +5.6V.
52	VSS		GND
53	CS EEPROM	O	Chip select signal to EEPROM (IC604).
54	CS CAM CCD	O	Chip select signal to CCD (IC611).
55	DATA SLS	O	Strobe signal to camera HVR (IC602).
56	EEPROM RESET	O	EEPROM (IC604) write disable signal. Normally "H".
57	CS AP CPU	O	Chip select signal to AP CPU (IC621).
58	CS PDR	O	Chip select signal to pre-driver (IC702).
59	CDS CON	O	A/D converter (IC704) CPU/CPP signal. Normally "H".
60	SYNC	O	"L": NTSC. "H": PAL.
61	DAO	I	Connected to +5.6V.
62			Not used.
63			
64	PDR RST	O	Reset signal to zoom/focus pre-driver (IC702). "H": Camera mode, "L": VTR mode.
65	MIRROR/VRT	O	"H": Steady shot operation. "L": Normal operation.
66	VPDCOMM RST	O	Reset signal to steady shot control microprocessor (IC777) and camera core (IC606). Normally "H". "L": Reset.
67	CPU RST	O	Reset signal to IC604 and IC703. "L": Camera mode. "L": VTR mode.
68			Not used. Connected to GND.
69			
70	VSS		GND
71	VDD		+5.6V power supply.
72			Not used.
73	EXTAL	I	24 MHz clock oscillation circuit.
74	XTAL	O	
75	RESET	I	Reset signal from main control microprocessor (VB board IC302). Normally "H". "L": Reset.
76	MODE		Connected to +5.6V.
77	MODA		Connected to GND.
78	IOD		Not used.
79	IOP		
80	VTR SO	O	Serial data output to main control microprocessor (VB board IC302).

6-2. STEADY SHOT CONTROL MICRO PROCESSOR PIN FUNCTION (VC BOARD IC777: CXP87132-010R) (CCD-TR82/TR400/TR550/TR750)

Pin No.	Signal Name	I/O	Function
1	MPX	O	Not used.
2	$\overline{\text{ADC STBY}}$	O	Standby output to A/D converter (IC776). Normally "H".
3	C RESET	O	Reset signal to PITCH/YAW sensor amplifier (IC772 to IC774) in initializing. Normally "L".
4	PB0/PPO8	O	Not used.
5	PC7/RTO7	O	
6	PC6/RTO6	O	
7	PC5/RTO5	O	
8	PC4/RTO4	O	
9	PC3/RTO3	O	
10	PC2/PPO18	O	
11	PC1/PPO17	O	
12	PC0/PPO16	O	
13	PJ7	O	
14	PJ6	O	
15	PJ5	O	
16	PJ4	O	
17	PJ3	O	
18	PJ2	O	
19	PJ1	O	
20	PJ0	O	
21	PD7	O	
22	PD6	O	
23	PD5	O	
24	PD4	O	
25	PD3	O	
26	PD2	O	
27	PD1	O	
28	PD0	O	
29	PH7	O	
30	PH6	O	
31	PH5	O	
32	PH4	O	
33	PH3	O	
34	PH2	O	
35	PH1	O	
36	PH0	O	
37	MP	I	Connected to GND.
38	$\overline{\text{VST RST}}$	I	Reset signal from camera microprocessor (IC602). Normally "H".
39	VSS		GND. Connected to GND.
40	XTAL	O	Connected to 12 MHz crystal oscillator.

Pin No.	Signal Name	I/O	Function
41	EXTAL	I	Connected to 12 MHz crystal oscillator.
42	$\overline{\text{CS VISTA MICOM}}$	I	Chip select signal from camera microprocessor (IC602).
43	S IN	I	Serial data input from camera microprocessor (IC602).
44	S OUT	O	Serial data output to camera microprocessor (IC602).
45	$\overline{\text{CAM SCK}}$	I	Serial data transfer clock from/to camera microprocessor (IC602).
46	PF7/AN11	O	Not used.
47	PF6/AN10	O	
48	PF5/AN9	O	
49	PF4/AN8	O	
50	AVSS		A/D port GND. Connected to GND.
51	AVREF	I	A/D port reference voltage input. Connected to +3.6V.
52	AVDD		A/D port positive power supply. Connected to +3.6V.
53	PF3/AN7	I	Not used. Connected to +3.6V.
54	PF2/AN6	I	
55	PF1/AN5	I	
56	PF0/AN4	I	
57	AN3	I	
58	AN2	I	
59	AN1	I	
60	AN0	I	
61	PG7/EX11	I	Not used. Connected to GND.
62	CGV	I	V SYNC from sync generator (IC610).
63	FLD	I	FLD signal from sync generator (IC610).
64	PG4/SYNC0	I	Not used. Connected to GND.
65	PG3//PBCTL	I	
66	PG2/DPG	I	
67	PG1/DFG	I	
68	PG0/CFG	I	
69	PE7/DAB1	O	Not used.
70	PE6/DAB0	O	
71	PE5/DAA1	O	
72	PE4/DAA0	O	
73	PE3/PWM1	O	
74	PE2/PWM0	O	
75	PE1//INT2	I	Not used. Connected to +3.6V.
76	PE0//INT0	I	
77	VST SI	I	Serial data input.
78	VST SO	O	Serial data output.
79	/VST SCK	O	Serial data transfer clock.
80	PI4//INT1	O	Not used.

6-2. STEADY SHOT CONTROL MICRO PROCESSOR PIN FUNCTION (VC BOARD IC777: CXP87132-010R) (CCD-TR82/TR400/TR550/TR750)

Pin No.	Signal Name	I/O	Function
1	MPX	O	Not used.
2	ADC STBY	O	Standby output to A/D converter (IC776). Normally "H".
3	C RSET	O	Reset signal to PITCH/YAW motor amplifier (IC775 to IC774) in initializing. Normally "L".
4	PG0/PPC0	O	Not used.
5	PG1/PC0	O	
6	PG2/KT0	O	
7	PG3/KT0	O	
8	PG4/KT0	O	
9	PG5/KT0	O	
10	PG6/PPG6	O	
11	PG7/PPG7	O	
12	PG8/PPG8	O	
13	P37	O	
14	P36	O	
15	P35	O	
16	P34	O	
17	P33	O	
18	P32	O	
19	P31	O	
20	P30	O	
21	PD7	O	
22	PD6	O	
23	PD5	O	
24	PD4	O	
25	PD3	O	
26	PD2	O	
27	PD1	O	
28	PD0	O	
29	PH7	O	
30	PH6	O	
31	PH5	O	
32	PH4	O	
33	PH3	O	
34	PH2	O	
35	PH1	O	
36	PH0	O	
37	RST	I	Connected to GND.
38	VIT SET	I	Reset signal from camera microprocessor (IC802). Normally "H".
39	VSS		GND. Connected to GND.
40	XTAL	O	Connected to 12 MHz crystal oscillator.

Pin No.	Signal Name	I/O	Function
41	EXCAL	I	Connected to 12 MHz crystal oscillator.
42	CS VIT/A MICRO	I	Chip select signal from camera microprocessor (IC802).
43	S IN	I	Serial data input from camera microprocessor (IC802).
44	S OUT	O	Serial data output to camera microprocessor (IC802).
45	SCM SCK	I	Serial data transfer clock from the camera microprocessor (IC802).
46	PP7/AN0.1	O	Not used.
47	PP6/AN0	O	
48	PP5/AN0	O	
49	PP4/AN0	O	
50	AVSS		A/D port GND. Connected to GND.
51	AVREF	I	A/D port reference voltage input. Connected to +5.6V.
52	AVDD		A/D port positive power supply. Connected to +5.6V.
53	PP3/AN7	I	Not used. Connected to +5.6V.
54	PP2/AN6	I	
55	PP1/AN5	I	
56	PP0/AN4	I	
57	AN3	I	
58	AN2	I	
59	AN1	I	
60	AN0	I	
61	P07/SDA1	I	Not used. Connected to GND.
62	COV	I	V SYNC from sync generator (IC816).
63	PL21	I	PLD signal from sync generator (IC816).
64	PG4/PPG0	I	Not used. Connected to GND.
65	PG3/PSCTL	I	
66	PG2/CPO	I	
67	PG1/DPO	I	
68	PG0/CPO	I	
69	PE7/SA31	O	Not used.
70	PE6/SA30	O	
71	PE5/SA41	O	
72	PE4/SA40	O	
73	PE3/PWM1	O	
74	PE2/PWM0	O	
75	PE1/SVT2	I	Not used. Connected to +5.6V.
76	PE0/SVT0	I	
77	VIT SI	I	Serial data input.
78	VIT SO	O	Serial data output.
79	/VIT SCK	O	Serial data transfer clock.
80	PE4/PC1	O	Not used.

Pin No.	Signal Name	I/O	Function
81	PI3/T0	O	Not used.
82	PI2//PWM	O	
83	PI1/P0	O	
84	PI0/PCK	I	Not used. Connected to +3.6V.
85	PKO	I	
86	GND		GND
87	VDD		+3.6V power supply.
88	VPP		Connected to +3.6V.
89	(/CS_DISP)	O	Not used.
90	PA6/PPO6	O	
91	/CS_ADC	O	Chip select signal to A/D converter (IC776).
92	/CS_ZTG	O	Chip select signal to timing generator (IC702).
93	/CS_ZVST	O	Chip select signal to IC613.
94	PA2/PPO2	O	Not used.
95	PA1/PPO1	O	
96	PA0/PPO0	O	
97	PB7/PPO15	O	
98	PB6/PPO14	O	
99	PB5/PPO13	O	
100	PB4/PPO12	O	

6-3. CAMERA CORE PIN FUNCTION (VC BOARD IC609: CXD2150R) (TR42/TR70/TR72/TR80/TR82/TR430) (VC BOARD IC609: CXD2150AR) (TR400/TR550/TR750)

Pin No.	Signal Name	I/O	Function
1	OPD6	O	OPD (IC611) data output.
2	OPD5	O	OPD data output.
3	OPD4	O	OPD data output.
4	OPD3	O	OPD data output.
5	OPD2	O	OPD data output.
6	OPD1	O	OPD data output.
7	OPD0	O	OPD data output, LSB.
8	OPDID	O	OPD line discrimination signal.
9	VDD	–	Power supply (+3.6V).
10	CO3	O	C signal output, MSB (CCD-TR82/TR400/TR550).
11	CO2	O	C signal output (CCD-TR82/TR400/TR550).
12	CO1	O	C signal output (CCD-TR82/TR400/TR550).
13	CO0	O	C signal output, LSB (CCD-TR82/TR400/TR550).
14	VSS	–	GND
15	CI3	I	C signal input, MSB (CCD-TR82/TR400/TR550).
16	CI2	I	C signal input (CCD-TR82/TR400/TR550).
17	CI1	I	C signal input (CCD-TR82/TR400/TR550).
18	CI0	I	C signal input, LSB (CCD-TR82/TR400/TR550).
19	NRB	O	C signal. Color discrimination signal.
20	VDD	–	+3.6V power supply.
21	VBC		Connected to GND via 0.1 μF capacitor.
22	AVSC		GND
23	IREFC		Connected to GND via 12 kΩ resistor.
24	VREFC	I	Full scale output value setting voltage.
25	VGC		Connected to +3.6V power supply via 0.1 μF capacitor.
26	AVDC		+3.6V power supply.
27	IOC	O	Chroma signal output (Current output).
28	VDD	–	Y I/F power supply (+3.6V).
29	DICK	O	Memory interface reference clock (CCD-TR82/TR400/TR550).
30	CDIS	O	Digital output (chroma) color discrimination signal (CCD-TR82/TR400/TR550).
31	YO7	O	Y signal output, MSB (CCD-TR82/TR400/TR550).
32	YO6	O	Y signal output (CCD-TR82/TR400/TR550).
33	YO5	O	Y signal output (CCD-TR82/TR400/TR550).
34	YO4	O	Y signal output (CCD-TR82/TR400/TR550).
35	YO3	O	Y signal output (CCD-TR82/TR400/TR550).
36	YO2	O	Y signal output (CCD-TR82/TR400/TR550).
37	YO1	O	Y signal output (CCD-TR82/TR400/TR550).
38	YO0	O	Y signal output, LSB (CCD-TR82/TR400/TR550).
39	DATS	I	DA test pin. (Normally fixed at "L".)
40	YI7	I	Y signal input, MSB (CCD-TR82/TR400/TR550).

Chroma signal D/A converter interface.

Pin No.	Signal Name	I/O	Function
81	PS/2D	O	Not used.
82	PS2E*/64	O	
83	PS/E0	O	
84	PS/SCK	I	Not used. Connected to +3.6V.
85	PS/D	I	
86	GND		GND
87	VDD		+3.6V power supply.
88	VPP		Connected to +3.6V.
89	(CH_DEF)	O	Not used.
90	PA0/PO0	O	
91	/CH_ADC	O	Chip select signal to A/D converter (IC710).
92	/CH_XTO	O	Chip select signal to timing generator (IC702).
93	/CH_SVST	O	Chip select signal to IC603.
94	PA1/PO1	O	Not used.
95	PA2/PO2	O	
96	PA3/PO3	O	
97	PT0/PO34	O	
98	PS0/PO34	O	
99	PS1/PO33	O	
100	PS4/PO33	O	

6-3. CAMERA CORE PIN FUNCTION
(VC BOARD IC609: CXD2150R) (TR42/TR70/TR72/TR80/TR82/TR430)
(VC BOARD IC609: CXD2150AR) (TR400/TR550/TR750)

Pin No.	Signal Name	I/O	Function
1	OPD4	O	OPD (IC611) data output.
2	OPD5	O	OPD data output.
3	OPD4	O	OPD data output.
4	OPD3	O	OPD data output.
5	OPD2	O	OPD data output.
6	OPD1	O	OPD data output.
7	OPD0	O	OPD data output. LSB.
8	OPDEO	O	OPD line discrimination signal.
9	VDD	--	Power supply (+3.6V).
10	CO5	O	C signal output, MSB (CCD-TR82/TR400/TR550).
11	CO4	O	C signal output (CCD-TR42/TR430/TR550).
12	CO1	O	C signal output (CCD-TR82/TR400/TR550).
13	CO0	O	C signal output, LSB (CCD-TR82/TR400/TR550).
14	VSS	--	GND
15	CI5	I	C signal input, MSB (CCD-TR82/TR400/TR550).
16	CI4	I	C signal input (CCD-TR42/TR430/TR550).
17	CI1	I	C signal input (CCD-TR82/TR400/TR550).
18	CI0	I	C signal input, LSB (CCD-TR82/TR400/TR550).
19	FIELD	O	C signal, Color discrimination signal.
20	VDD	--	+3.6V power supply.
21	VRC		Connected to GND via 0.1 μF capacitor.
22	AVSS		GND
23	IRFC		Connected to GND via 13 kΩ resistor.
24	VRFC	I	Full scale output voltage setting voltage.
25	VCC		Connected to +3.6V power supply via 0.1 μF capacitor.
26	AVDC		+3.6V power supply.
27	EOC	D	Chroma signal output (Current output).
28	VDD	--	Y DF power supply (+3.6V).
29	DECK	O	Memory interface reference clock (CCD-TR82/TR400/TR550).
30	CDES	O	Digital output (pulses) color discrimination signal (CCD-TR82/TR400/TR550).
31	YO7	O	Y signal output, MSB (CCD-TR82/TR400/TR550).
32	YO6	O	Y signal output (CCD-TR82/TR400/TR550).
33	YO5	O	Y signal output (CCD-TR82/TR400/TR550).
34	YO4	O	Y signal output (CCD-TR82/TR400/TR550).
35	YO3	O	Y signal output (CCD-TR82/TR400/TR550).
36	YO2	O	Y signal output (CCD-TR82/TR400/TR550).
37	YO1	O	Y signal output (CCD-TR82/TR400/TR550).
38	YO0	O	Y signal output, LSB (CCD-TR82/TR400/TR550).
39	DAS9	I	DA test pin. (Normally fixed at "L".)
40	Y7	I	Y signal input, MSB (CCD-TR82/TR400/TR550).

Chroma signal D/A converter interface.

Pin No.	Signal Name	I/O	Function
41	YI6	I	Y signal input (CCD-TR82/TR400/TR550).
42	YI5	I	Y signal input (CCD-TR82/TR400/TR550).
43	YI4	I	Y signal input (CCD-TR82/TR400/TR550).
44	YI3	I	Y signal input (CCD-TR82/TR400/TR550).
45	YI2	I	Y signal input (CCD-TR82/TR400/TR550).
46	YI1	I	Y signal input (CCD-TR82/TR400/TR550).
47	YI0	I	Y signal input, LSB (CCD-TR82/TR400/TR550).
48	VSS	–	GND
49	IOY	O	Y signal output (current output). } Y signal D/A converter interface.
50	AVDY		+3.6V power supply.
51	VGY		Connected to +3.6V power supply via 0.1 μF capacitor.
52	VRFY	I	Full scale output value setting voltage.
53	IRFY		Connected to GND via 12 kΩ resistor.
54	AVSY		GND
55	VBY		Connected to GND via 0.1 μF capacitor.
56	VDD	–	+3.6V power supply
57	BIN	I	Not used.
58	GIN	I	Not used.
59	RIN	I	Not used.
60	TIKEY	I	Not used.
61	WKEY	I	Wide ID signal input.
62	VCK	I	PAL 4 fsc modulation clock.
63	VHLD	I	Mosaic processing vertical hold control signal.
64	HHLD	I	Mosaic processing horizontal hold control signal.
65	CSYN	I	Sync signal (SYNC) input.
66	LALT	I	PAL line modulation inverted signal input.
67	CBK	I	Blanking signal (CBLK) input.
68	BF	I	Burst added signal input.
69	HD	I	Horizontal sync signal (HD) input.
70	VD	I	Vertical sync signal (VD) input.
71	AJST	I	Data sampling pulse input.
72	VDD	–	+3.6V power supply.
73	SCK	I	Serial interface clock input from camera microprocessor (IC602).
74	SI	I	Serial interface data input from camera microprocessor.
75	XCE	I	Serial interface enable input from camera microprocessor.
76	SO	O	Serial interface data output to camera microprocessor.
77	VSS	–	GND
78	CLK	I	Clock input.
79	DEF	I	Defect compensation position pulse.
80	ID	I	Color line discrimination signal.

Pin No.	Signal Name	I/O	Function
81	MCK	I	Main clock input.
82	VDD	–	+3.6V power supply.
83	XCLR	I	All clear input.
84	VDD	–	AD I/F power supply (+3.6V).
85	ADCK	O	AD converter clock output. Not used.
86	VSS	–	GND
87	AD0	I	AD data input from A/D converter (IC704), MSB.
88	AD1	I	AD data input from A/D converter.
89	AD2	I	AD data input from A/D converter.
90	AD3	I	AD data input from A/D converter.
91	AD4	I	AD data input from A/D converter.
92	AD5	I	AD data input from A/D converter.
93	AD6	I	AD data input from A/D converter.
94	AD7	I	AD data input from A/D converter.
95	AD8	I	AD data input from A/D converter.
96	AD9	I	AD data input from A/D converter, LSB.
97	VDD	–	+3.6V power supply.
98	OPD9	O	OPD (IC611) data output, MSB.
99	OPD8	O	OPD data output.
100	OPD7	O	OPD data output.

Pin No.	Signal Name	I/O	Function
41	Y14	I	Y signal input (CCD-TR82/TR480/TR280).
42	Y15	I	Y signal input (CCD-TR82/TR480/TR280).
43	Y14	I	Y signal input (CCD-TR82/TR480/TR280).
44	Y13	I	Y signal input (CCD-TR82/TR480/TR280).
45	Y12	I	Y signal input (CCD-TR82/TR480/TR280).
46	Y11	I	Y signal input (CCD-TR82/TR480/TR280).
47	Y10	I	Y signal input, LSB (CCD-TR82/TR480/TR280).
48	VSS	—	GND
49	IOY	O	Y signal output (current output).
50	AVDY	—	+5.0V power supply.
51	VOY		Connected to +5.0V power supply via 0.1 μF capacitor.
52	VREF	I	Full scale output value setting voltage.
53	DRY		Connected to GND via 10 kΩ resistor.
54	AVSY		GND
55	VRY		Connected to GND via 0.1 μF capacitor.
56	VDD	—	+5.0V power supply
57	RSI	I	Not used.
58	DIN	I	Not used.
59	RSF	I	Not used.
60	TEST	I	Not used.
61	WIDE	I	Wide LD signal input.
62	VCK	I	PAL 4 fsc modulation clock.
63	VHLD	I	Monitor processing vertical hold control signal.
64	HHLD	I	Monitor processing horizontal hold control signal.
65	CSYN	I	Sync signal (SYNC) input.
66	LAST	I	PAL line coincidence inverted signal input.
67	CBK	I	Blanking signal (CBLK) input.
68	BP	I	Burst added signal input.
69	HD	I	Horizontal sync signal (HD) input.
70	VD	I	Vertical sync signal (VD) input.
71	AHT	I	Data sampling pulse input.
72	VDD	—	+5.0V power supply.
73	SCK	I	Serial interface clock input from remote microprocessor (IC802).
74	SI	I	Serial interface data input from remote microprocessor.
75	XCS	I	Serial interface enable input from remote microprocessor.
76	SO	O	Serial interface data output to remote microprocessor.
77	VSS	—	GND
78	CLK	I	Clock input.
79	LBP	I	Color compensation position pulse.
80	ID	I	Color line discrimination signal.

Y signal DA converter interface.

Pin No.	Signal Name	I/O	Function
81	MCK	I	Main clock input.
82	VDD	—	+5.0V power supply.
83	XCLR	I	All clear input.
84	VCD	—	AD LSI power supply (+5.0V).
85	ADCK	O	AD converter clock output. Not used.
86	VSS	—	GND
87	AD0	I	AD data input from A/D converter (IC704). MSB.
88	AD1	I	AD data input from A/D converter.
89	AD2	I	AD data input from A/D converter.
90	AD3	I	AD data input from A/D converter.
91	AD4	I	AD data input from A/D converter.
92	AD5	I	AD data input from A/D converter.
93	AD6	I	AD data input from A/D converter.
94	AD7	I	AD data input from A/D converter.
95	AD8	I	AD data input from A/D converter.
96	AD9	I	AD data input from A/D converter. LSB.
97	VDD	—	+5.0V power supply.
98	OPD0	O	OPD (EMI) data output, MSB.
99	OPD8	O	OPD data output.
100	OPD9	O	OPD data output.

6-4. MECHANISM CONTROL MICRO PROCESSOR PIN FUNCTION (VS BOARD IC505: CXP87132-009R)

Note 1: CCD-TR72/TR80/TR400/TR430/TR750
Note 2: CCD-TR400

Pin No.	Signal Name	I/O	Function
1	RP PB MODE	O	REC/PB switching signal of REC/PB amplifier (VS board IC102) and ATF servo IC (VS board IC508). "H": PB.
2	$\overline{\text{FE ON}}$	O	Flying erase oscillation on/off control signal. "L": Oscillation.
3	JOG VD	O	False VD signal inserted in playback video signal during variable speed playback.
4	JOG	O	Variable speed playback/normal playback switching signal of video circuit. "H": Variable speed playback.
5	$\overline{\text{S JACK IN}}$	I	(Note 2)
6	$\overline{\text{PB 1.7M DET}}$	I	AFM stereo tape/monaural tape discrimination input. "H": During stereo or bilingual tape playback. (Note 1)
7	JACK MON/$\overline{\text{ST}}$ DET	I	Monaural/stereo discrimination input of audio input/output terminal. "L": When jack is inserted in right channel terminal. (Note 1)
8	INT VD	O	Internal VD signal.
9	SYSTEM SYNC (PBV)	O	System synchronizing signal.
10	$\overline{\text{SYNC DET}}$	O	Sync detect output. "L" when sync is detect.
11	E/$\overline{\text{L}}$ DET	I	Normal/Hi8 discrimination input. "H" when Hi8 tape playback. (Note 2)
12	$\overline{\text{MIC MONO}}$	I	External microphone monaural/stereo discrimination input. "L": When monaural microphone is used. (Note 1)
13	MODE SW 0	I	Mode switch input.
14	MODE SW 1	I	
15	MODE SW 2	I	
16	$\overline{\text{CC DOWN SW}}$	I	Cassette compartment down switch input. "L": down
17	REC PROOF SW	I	Recording-proof switch input. "H": REC prohibition.
18	ME/$\overline{\text{MP}}$ SW	I	ME/$\overline{\text{MP}}$ switch input. "L": MP, "H": ME.
19	Hi8 MP SW	I	Hi8 MP switch input. "H": Hi8 MP, "L": Normal MP or ME.
20	$\overline{\text{LM LIM ON}}$	O	Loading motor limiter on detection signal. Normally "H": "L" when limiter is on.
21	LINE MIX	O	Audio stereo/monaural control signal. (Note 1)
22	MX SEL 1	O	When recording: Monaural/stereo switching signal. When playing back: Monaural/stereo/bilingual switching signal.
23	MX SEL 2	O	
24	MX ON/OFF	O	Matrix on/off signal. "H": Matrix on (stereo recording/playback) (Note 1)
25	COMP REC	O	Video input/S video input switching signal. "H": Video input.
26	CAM/$\overline{\text{LINE}}$	O	Camera input/line input switching signal. "H": Camera input.
27	$\overline{\text{WIND}}$	O	"L": Wind sound decrease on. (Note 1)
28	N.C.		Not used.
29	UNLOAD	O	Loading motor control signal. When unloading: "H" or "H" pulse.
30	LOAD	O	Loading motor control signal. When loading: "H" or "H" pulse.

	BL	END	EJECT	USE	LOAD	READY	TURN	REC/PB	FF
M SW 0	H	L	L	H	L	H	H	L	L
M SW 1	H	H	L	L	L	L	H	H	L
M SW 2	H	H	H	H	H	L	L	L	L

	Monaural	Stereo
MX SEL 1	L	L
MX SEL 2	H	L

	Stereo	Main	Sub	Monaural
MX SEL 1	L	L	H	L
MX SEL 2	L	H	L	H

(Note 1)

Pin No.	Signal Name	I/O	Function
31	$\overline{\text{LM LIM CONT}}$	O	Loading motor limiter control signal. Momentarily "H" when loading.
32	DRUM ON	O	Drum motor on/off signal. "H" (Approx. 1.3V): Drum on.
33	DRUM RVS	O	Drum rotation direction control signal. Normally "L".
34	N.C.		Not used. (open)
35	$\overline{\text{EDIT}}$	O	Video circuit normal/EDIT switching signal. "L": When edit of menu display is at "ON".
36	E/$\overline{\text{L}}$ OUT	O	Video circuit normal/Hi8 switching signal. "H": Hi8 mode. (Note 2)
37	MP		Connected to GND.
38	$\overline{\text{RESET}}$	I	Reset signal from mode control micro processor (VS board IC503). When reset: "L".
39	VSS		GND
40	XTAL	O	11.89 MHz clock oscillation circuit.
41	EXTAL	I	
42	$\overline{\text{MECHA CON CS}}$	I	Chip select signal from mode control micro processor (VS board IC503).
43	DATA TO SLAVE	I	Serial data input from mode control micro processor.
44	DATA TO MASTER	O	Serial data output to mode control micro processor.
45	$\overline{\text{MODECON SCK}}$	I	Serial clock input from mode control micro processor.
46	AUDIO MUTE	O	Audio output mute signal. "H": Mute.
47	VIDEO MUTE	O	Video output mute signal. "H": Mute.
48	MONO REC (1.7M $\overline{\text{ON}}$/OFF)	O	Monaural/stereo recording switching signal. "H": During monaural recording (1.7 MHz REC AFM carrier off). (Note 1)
49	N.C.		
50	AVSS		A/D converter system GND.
51	AVREF		A/D converter system reference voltage. Connected to SS3.6V.
52	AVDD		A/D converter system power supply. Connected to SS3.6V.
53	EXT MIC	I	External microphone discrimination input. Not used.
54	END SENS	I	Tape end detection signal. Normally: "L", "H" pulse at tape end.
55	TOP SENS	I	Tape top detection signal. Normally: "L", "H" pulse at tape top.
56	$\overline{\text{DEW DET}}$	I	Condensation detection signal. "L" when condensation present.
57	N.C.		Not used. Connected to GND.
58	ATF ERROR	I	ATF error input.
59	S REEL FG	I	S reel FG signal input.
60	T REEL FG	I	T reel FG signal input.
61	NC		Not used. Connected to GND.
62	CAM VD	I	VD signal from camera circuit sync generator (VC board IC610). V cycle pulse.
63	FLD	I	FIELD signal from camera circuit sync generator.
64	VTR SYNC	I	Composite sync signal separated from recording/playback Y signal.
65		I	Connected to GND.
66	DRUM PG	I	Drum PG signal input. For drum phase servo. 33.3 msec. cycle "H" pulse.
67	DRUM FG	I	Drum FG signal input. For drum speed servo. 2.8 msec. cycle pulse.
68	CAP FG	I	Capstan FG signal input.
69	N.C.	O	Not used.

6-4. MECHANISM CONTROL MICRO PROCESSOR PIN FUNCTION (VS BOARD IC605: CXP87132-009R)

Note 1: CED-TR72/TR80/TR400/TR430/TR750
Note 2: CED-TR400

Pin No.	Signal Name	I/O	Function
1	RF FG MODE	O	REC/PB switching signal of REC/PB amplifier (VS board IC302) and ATF servo IC (VS board IC303). "H": PB.
2	FG ON	O	Flying erase oscillation on/off control signal. "L": Oscillation.
3	JOG VD	O	Pulse VD signal inserted in playback video signal during variable speed playback.
4	JOG	O	Variable speed playback/stop/forward playback switching signal of video circuit. "H": Variable speed playback.
5	STANDBY	I	(Note 2)
6	HI LIMITER	I	AFM stereo/monaural tape discrimination input. "H": Analog stereo or bilingual tape playback. (Note 1)
7	JACK MONITOR DET	I	Monaural/stereo discrimination input of audio reproduced terminal. "L": When jack is inserted in right channel terminal. (Note 1)
8	INT VD	O	Internal VD signal.
9	SYSTEM SYNC (PAL)	O	System synchronizing signal.
10	SYNC DET	O	Sync detect output. "L" when sync is stored.
11	HC DET	I	Monaural/stereo discrimination input. "H" when HiFi tape playback. (Note 2)
12	ARC MONO	I	External audio/mono monaural/stereo discrimination input. "L": When monaural videogram is used. (Note 1)
13	MODE SW 0	I	Mode switch input.
14	MODE SW 1	I	
15	MODE SW 2	I	

	BL	BPD	MRST	LBI	LOAD	READY	TURN	REOPN	PP
M SW 0	H	L	L	H	L	H	H	L	L
M SW 1	H	H	L	L	L	L	L	H	L
M SW 2	H	H	H	H	H	L	L	L	L

Pin No.	Signal Name	I/O	Function
16	CC DOWN SW	I	Cassette compartment lower switch input. "L": closed
17	REC PROOF SW	I	Recording-proof switch input. "H": REC prohibition.
18	MESAP SW	I	MESAP switch input. "L": MP, "H": MSL.
19	HIFI MP SW	I	HiFi MP switch input. "H": HiFi MP, "L": Normal MP or MLP.
20	LIT LIM ON	O	Limiting motor limiter on detection signal. Normally "H". "L" when limiter is on.
21	LIMIT MOX	O	Audio stereo/monaural control signal. (Note 1)
22	MOX SEL 1	O	When recording: Monaural/stereo switching. When playing back: Monaural/stereo/bilingual switching signal.
23	MOX SEL 2	O	

	Monaural	Stereo
MOX SEL 1	L	L
MOX SEL 2	H	L

	Stereo	Audio	Rch	Monaural
MOX SEL 1	L	L	H	L
MOX SEL 2	L	H	L	H

(Note 1)

Pin No.	Signal Name	I/O	Function
24	MOX ON/OFF	O	Mode output signal. "H": Mode on (stereo recording/playback) (Note 1)
25	COMP REC	O	Video input/# video input switching signal. "H": Video input.
26	CAM/LINE	O	Camera input/line input switching signal. "H": Camera input.
27	WRN	O	"L": When output abnormal etc. (Note 1)
28	N.C.		Not used.
29	UNLOAD	O	Loading motor control signal. When unloading: "H" or "H" pulse.
30	LOAD	O	Loading motor control signal. When loading: "H" or "H" pulse.
31	TRI.MG CONT	O	Loading motor limiter control signal. Minimum/off "H" when loading.
32	DRUM ON	O	Drum motor on/off signal. "H" (Approx. 5.3V): Drum on.
33	DRUM SVS	O	Drum rotation direction control signal. Normally "L".
34	N.C.		Not used. (Open)
35	SOT	O	Video circuit monaural/SECAM switching signal. "L": When only or stereo display is on. "ON".
36	BC OUT	O	Video circuit monaural/SH switching signal. "H": HiFi mode. (Note 2)
37	MP		Connected to GND.
38	SHIFT	I	Reset signal from mode control micro processor (VS board IC302). When reset: "L".
39	VSS		GND
40	XTAL	O	13.MP MHz clock oscillation circuit.
41	EXTAL	I	
42	MECHA CON CS	I	Chip select signal from mode control micro processor (VS board IC309).
43	DATA TO SLAVE	I	Serial data input from mode control micro processor.
44	DATA TO MASTER	O	Serial data output to mode control micro processor.
45	MECHA CON SCK	I	Serial clock input from mode control micro processor.
46	AUDIO MUTE	O	Audio output mute signal. "H": Mute.
47	VIDEO MUTE	O	Video output mute signal. "H": Mute.
48	MONO REC (1.2MHz ON/OFF)	O	Monaural/stereo recording switching signal. "H": During monaural recording (1.7 MHz REC APM center off). (Note 1)
49	N.C.		
50	AVSS		A/D converter system GND.
51	AVREF		A/D converter reference voltage. Connected to 5V5.0V.
52	AVCD		A/D converter system power supply. Connected to 5V5.0V.
53	HCT MIC	I	External/microphone discrimination input. Not used.
54	END SENS	I	Tape end sensitive signal. Normally: "L". "H" pulse at tape end.
55	TOP SENS	I	Tape top detection signal. Normally: "L". "H" pulse at tape top.
56	DRV DET	I	Counterrotation detection signal. "L": when counterrotation present.
57	N.C.		Not used. Connected to GND.
58	ATF ERROR	I	ATF error input.
59	S REEL FG	I	S reel FG signal input.
60	T REEL FG	I	T reel FG signal input.
61	NC		Not used. Connected to GND.
62	CAM VD	I	VD signal from camera signal sync generator (VC board IC512). V cycle pulse.
63	FLD	I	FIELD signal from camera circuit sync generator.
64	VTR SYNC	I	Composite sync signal separated from recording/playback V signal.
65		I	Connected to GND.
66	DRUM FG	I	Drum FG signal input. For drum phase servo. 30.3 msec. cycle "H" pulse.
67	DRUM PG	I	Drum PG signal input. For drum speed servo. 2.0 msec. cycle pulse.
68	CAP FG	I	Capstan FG signal input.
69	N.C.		Not used.

Pin No.	Signal Name	I/O	Function
70	T/E LED ON	O	TAPE LED on/off signal. 200 msec. cycle "H" pulse during REC/PB.
71	SP/$\overline{LP}$	O	SP/LP switching signal. "L": LP.
72	ME/$\overline{MP}$ OUT	O	Recording current switching signal. "H": ME tape.
73	CAP PWM	O	Capstan error signal output. PWM signal.
74	DRUM PWM	O	Drum error signal output. PWM signal.
75	CFG HMS	I	Capstan FG signal input.
76	5.9M ATF CLK	O	Clock signal for ATF servo IC (IC508).
77	$\overline{CS\ TO\ ATF}$	O	Chip select signal for ATF servo IC.
78	DATA TO ATF	O	Serial data output to ATF servo IC.
79	$\overline{ATF\ SCK}$	O	Serial clock output to ATF servo IC.
80	ATF STBY	O	Standby signal for ATF servo IC.
81	SP/LP DET	I	Discriminates recording mode.
82	CLOG DET	I	Head clog detection signal. "L": Normal.
83	REF PILOT	O	Reference pilot signal for ATF servo.
84	N.C.		Not used. Connected to GND.
85	N.C.	I	
86	VSS		GND
87	VDD		Connected to SS3.6V.
88	VPP		
89	DRUM ACC	O	Drum motor acceleration signal.
90	DRUM BLK	O	Drum motor brake signal. Normally: "L".
91	N.C.		Not used. (open)
92	N.C.	O	
93	VIDEO IN/$\overline{OUT}$	O	Video input/output switching signal. "L": Video output.
94	AUDIO $\overline{IN}$/OUT	O	Audio input/output switching signal. "H": Audio output.
95	VA PB MODE	O	REC/PB switching signal of video; audio circuit. "H": PB.
96	VI SWP	O	RF switching pulse signal for video circuit.
97	RF SWP	O	RF switching pulse signal for REC/PB amp and audio circuit.
98	HEAD CHG	O	Head switching signal.
99	CAP ON	O	Capstan driver on/off control signal. "H": Capstan on.
100	CAP FWD/$\overline{RVS}$	O	Capstan rotation direction control signal. "H": FWD. "L": RVS.

6-5. MODE CONTROL MICRO PROCESSOR PIN FUNCTIONS (VS BOARD IC503: MB89098PFV-G-107-BND)

Note 1: CCD-TR70/TR80
Note 2: CCD-TR400/TR750
Note 3: CCD-TR82/TR400/TR550

Pin No.	Signal Name	I/O	Function
1	TEST MODE 0	I	Connected to GND.
2	TEST MODE 1	I	Connected to GND.
3	X0	I	10 MHz clock oscillation circuit.
4	X1	O	
5	VSS		GND
6	$\overline{RESET}$	I	Reset input.
7	$\overline{DATA\ SW}$	I	Date (+) key (CK board S221) input. Normally "H". "L" when key is pressed.
8	$\overline{TIME\ SW}$	I	Time key (CK board S222) input. Normally "H". "L" when key is pressed.
9	$\overline{EJECT\ SW}$	I	Cassette eject switch (FK board S103) input. Normally "H". "L" when switch is pressed.
10	$\overline{VTR\ MODE\ SW}$	I	Power supply switch (CK board S223) input. "L" when power supply switch is at "Video".
11	$\overline{AGE\ SW}$	I	AGE switch input. "L" when key is pressed. Not used.
12	$\overline{START/STOP\ SW}$	I	Start/stop key (FK board S102) input. "L" when key is pressed.
13	$\overline{CC\ DOWN\ SW}$	I	CCDOWN switch (mechanism section) input. "L" when cassette compartment is locked.
14	$\overline{CAM+STBY\ SW}$	I	Power supply switch (CK board S223), stand-by switch (FK board S101) input. "L" when power supply switch is at "Camera" and stand-by switch at "Standby".
15	BATT IN	I	Main battery detection input. "H" when main battery is loaded or external power supply is connected.
16	PB V	I	System sync signal from mechanism control micro processor (VS board IC505).
17	RF SWP	I	RF switching pulse.
18	$\overline{LANC\ POWER\ ON}$	I	Power on signal input from wired remote commander. "L" when power switch of remote commander is pressed.
19	$\overline{LI\ PRE\ END}$	I	Lithium battery end detection input. "L" when lithium battery has worn out or has not been loaded.
20	$\overline{EEPROM\ WE}$	O	EEPROM (VS board IC502) writing enable signal. "L" when writing data.
21			Not used.
22			
23	$\overline{TALLY\ LED}$	O	Tally LED on/off signal.
24	$\overline{SYSTEM\ RESET}$	O	Reset signal of all systems. Normally "H". "L" when reset.
25	N.C.	O	Not used.
26	BATT IN	I	
27	N.C.		Not used.
28	N.C.		
29	N.C.		
30	$\overline{SIRCS\ SIG}$	I	Infrared remote commander signal input.
31	N.C.		Not used.
32			
33	$\overline{CS\ EEPROM}$	O	Chip select signal to EEPROM (VS board IC502).
34	$\overline{CS\ VIDEO}$	O	Chip select signal to video IC (VS board IC201).
35	EVF DA STB	O	Chip select signal to EVR of COLOR EVF (VF board IC903) (Note 1).
36	$\overline{CS\ SG}$	O	Chip select signal to SYNC generator (VC board IC610).
37	CS DA	O	Strobe signal to DA (VS board IC951).
38	$\overline{CS\ CAM}$	O	Chip select signal to camera micro processor (VC board IC602).
39	N.C.	O	Not used.
40	N.C.	O	

Pin No.	Signal Name	I/O	Function
70	TR LED OH	O	TAPE LED on/off signal. 300 msec. cycle "H" pulse during REC/PB.
71	SHLP	O	SHLP switching signal. "L": LP.
72	MIRR OUT	O	Rotating mirror switching signal. "H": MR tape.
73	CAP PWM	O	Capstan servo signal output. PWM signal.
74	DRUM PWM	O	Drum servo signal output. PWM signal.
75	CPG RMS	I	Capstan FG signal input.
76	SJM ATF CLK	O	Clock signal for ATF servo IC (IC202).
77	CS TO ATF	O	Chip select signal for ATF servo IC.
78	DATA TO ATF	O	Serial data output to ATF servo IC.
79	ATF SCK	O	Serial clock output to ATF servo IC.
80	ATF STBY	O	Standby signal for ATF servo IC.
81	SPLP DET	I	Discriminate cassetting mode.
82	CLOG DET	I	Head clog detection signal. "L": Normal.
83	REF FS.OU	O	Reference pulse signal for ATF servo.
84	N.C.		Not used. Connected to GND.
85	N.C.	I	
86	VSS		GND
87	VDD		Connected to 5V/3.6V.
88	VPP		
89	DRUM ACC	O	Drum motor acceleration signal.
90	DRUM BLK	O	Drum motor brake signal. Normally: "L".
91	N.C.		Not used. (open)
92	N.C.	O	
93	VIDEO SW/XIT	O	Video input/output switching signal. "L": Video output.
94	AUDIO SW/XIT	O	Audio input/output switching signal. "H": Audio output.
95	VA PB MODE	O	REC/PB switching signal of video/audio circuit. "H": PB.
96	VI SWP	O	30" switching pulse signal for video circuit.
97	HP SWP	O	30" switching pulse signal for REC/PB amp and audio circuit.
98	HEAD CHG	O	Head switching signal.
99	CAP DH	O	Capstan driver on/off control signal. "H": Capstan on.
100	CAP FWD/REVE	O	Capstan rotation direction control signal. "H": FWD. "L": REV.

6-5. MODE CONTROL MICRO PROCESSOR PIN FUNCTIONS (VS BOARD IC503: MB89095PFV-G-107-BND)

Note 1: CCD-TR70/TR80
Note 2: CCD-TR400/TR50
Note 3: CCD-TR82/TR400/TR550

Pin No.	Signal Name	I/O	Function
1	TEST MODE 0	I	Connected to GND.
2	TEST MODE 1	I	Connected to GND.
3	XO	I	10 MHz clock oscillation circuit.
4	XI	O	
5	VSS		GND
6	RESET	I	Reset input.
7	DATA SW	I	Data (+) key (CK board S201) input. Normally "H". "L" when key is pressed.
8	TAPE SW	I	Tape key (CK board S202) input. Normally "H". "L" when key is pressed.
9	CSSET SW	I	Cassette eject switch (CK board S403) input. Normally "H". "L" when switch is pressed.
10	VTR MODE SW	I	Power supply switch (CK board S223) input. "L" when power supply switch is at "Video".
11	ACH SW	I	AMS switch input. "L" when key is pressed. Not used.
12	START/STOP SW	I	Start/stop key (VK board S808) input. "L" when key is pressed.
13	CC DOWN SW	I	CCD/CW switch (mechanism section) input. "L" when camera cover/protect is locked.
14	CAM-STBY SW	I	Power supply switch (CK board S220). stand-by switch (VK board S104) input. "L" when power supply switch is at "Camera" and stand-by switch at "Stand-By".
15	BATT SW	I	Dicky battery detection input. "H" when main battery is loaded or external power supply is connected.
16	PB V	I	System error signal from mechanism control micro processor (VR board IC302).
17	HP SWP	I	30" switching pulse.
18	LANC POWER ON	I	Power on signal input from wired remote commander. "L" when power switch of remote commander is pressed.
19	LI PRESS	I	Lithium battery not detection input. "L" when lithium battery has worn out or has not been loaded.
20	EEPROM WR	O	EEPROM (VS board IC202) writing enable signal. "L": when writing data.
21			Pin used.
22			
23	TALLY LED	O	Tally LED on/off signal.
24	SYSTEM RESET	O	Reset signal of all systems. Normally "H". "L" when reset.
25	N.C.	O	Not used.
26	BATT IN	I	
27	N.C.		Pin used.
28	N.C.		
29	N.C.		
30	REMO SIG	I	Infrared remote commander signal input.
31	N.C.		Not used.
32			
33	CS EEPROM	O	Chip select signal to EEPROM (VS board IC202).
34	CS VIDEO	O	Chip select signal to video IC (VR board IC301).
35	SUP DA SYS	O	Chip select signal to SYS or COLOR SUP (VP board IC302) (Note 3).
36	CS SYS	O	Chip select signal to SYNC generator (VC board IC403).
37	CS DA	O	System signal to DA (VR board IC501).
38	CS CAM	O	Chip select signal to camera micro processor (VC board IC302).
39	N.C.	O	Not used.
40	N.C.	O	

Pin No.	Signal Name	I/O	Function
41	N.C.		Not used.
42	N.C.		
43	SEG19	O	LCD segment terminal drive signal. Pulse of 4 values (0V, 1.2V, 2.4V and 3.6V). (Note 2)
44	SEG18	O	
45	SEG17	O	
46	SEG16	O	
47	VCC		+3.6V power supply (+3V power supply during backup).
48	SEG15	O	LCD segment terminal drive signal. Pulse of 4 values (0V, 1.2V, 2.4V and 3.6V). (Note 2)
49	SEG14	O	
50	SEG13	O	
51	SEG12	O	
52	SEG11	O	
53	SEG10	O	
54	SEG09	O	
55	SEG08	O	
56			GND
57	SEG07	O	LCD segment terminal drive signal. Pulse of 4 values (0V, 1.2V, 2.4V and 3.6V). (Note 2)
58	SEG06	O	
59	SEG05	O	
60	SEG04	O	
61	SEG03	O	
62	SEG02	O	
63	SEG01	O	
64	SEG00	O	
65	V3	I	3.6V — LCD drive bias voltage. (Note 2)
66	V2	I	2.4V
67	V1	I	1.2V
68	V0	I	0V
69	COM0	O	LCD COM terminal drive signal. Pulse of 4 values (0V, 1.2V, 2.4V and 3.6V). (Note 2)
70	COM1	O	
71	COM2	O	
72	COM3	O	
73	$\overline{\text{CS OSD}}$	O	Chip select signal to character generator (VC board IC614).
74	$\overline{\text{CS MECHA}}$	O	Chip select signal to mechanism control micro processor (VS board IC505).
75	DATA TO MASTER	I	Serial data input signal.
76	DATA TO SLAVE	O	Serial data output signal.
77	$\overline{\text{MODECON SCK}}$	O	Serial data transfer clock.
78	N.C.	O	Not used.
79	VTR DD ON	O	VTR DC-DC converter control signal. "H" when power switch is at "Player/video" or "Camera".
80	CAM DD ON	O	CAMERA DC-DC converter control signal.
81	AVSS		A/D port GND.

Pin No.	Signal Name	I/O	Function
82	K AD IN 0	I	Key input. A/D port. REC key (FK board S101, 106 (Note 2)) FF key (FK board S105) STOP key (FK board S104)
83	K AD IN 1	I	Key input. A/D port. PLAY key (FK board S111) REW key (FK board S110) PAUSE key (FK board S109)
84	K AD IN 2	I	Key input. A/D port. SET key (CK board S204) SELECT (–) key (CK board S203) SELECT (+) key (CK board S202) MENU key (CK board S201)
85	K AD IN 3	I	Key input. A/D port. FOCUS MANUAL key (CK board S211 (Note 2)) FADER key (CK board S208) BACK LIGHT/BRIGHT key (CK board S207) PROGRAM AE key (CK board S205)
86	K AD IN 4	I	Key input. A/D port. STEADY SHOT key (CK board S211 (Note 3)) EDIT SEARCH (–) key (CK board) EDIT SEARCH (+) key (CK board) COUNTER RESET key (CK board)
87	N.C.		Not used.
88	N.C.		
89	N.C.		
90	AVCC		A/D port power supply (+3.6V).
91	BATT SENS	I	For main battery voltage input. (Voltage divided into 1/3.14 by R586, R587).
92	N.C.	I	Not used.
93	BRIGHA B	I	Brightness adjusting dial input. Pulse input by dial rotation. (Note 2).
94	BRIGHT B	I	Brightness adjusting dial input. Pulse input by dial rotation. (Note 2).
95	LANC IN	I	LANC serial data input.
96	LANC OUT	O	LANC serial data output.
97	BUZZER	O	Buzzer output.
98	VCC		+3.6V power supply.
99	CL1	O	32 kHz clock oscillation circuit (for clock).
100	CL0	I	

Pin No.	Signal Name	I/O	Function
41	N.C.		Not used.
42	N.C.		
43	SEG19	O	
44	SEG18	O	LCD segment terminal drive signal. Pulse of 4 values (0V, 1.2V, 2.4V and 3.6V). (Note 2)
45	SEG17	O	
46	SEG16	O	
47	VCC		+3.6V power supply (+3V power supply during backup).
48	SEG15	O	LCD segment terminal drive signal. Pulse of 4 values (0V, 1.2V, 2.4V and 3.6V). (Note 2)
49	SEG14	O	
50	SEG13	O	
51	SEG12	O	
52	SEG11	O	
53	SEG10	O	
54	SEG09	O	
55	SEG08	O	
56			GND
57	SEG07	O	LCD segment terminal drive signal. Pulse of 4 values (0V, 1.2V, 2.4V and 3.6V). (Note 2)
58	SEG06	O	
59	SEG05	O	
60	SEG04	O	
61	SEG03	O	
62	SEG02	O	
63	SEG01	O	
64	SEG00	O	
65	V5	I	3.6V — LCD drive bias voltage. (Note 2)
66	V4	I	2.4V
67	V1	I	1.2V
68	V0	I	0V
69	COM3	O	LCD COM terminal drive signal. Pulse of 4 values (0V, 1.2V, 2.4V and 3.6V). (Note 2)
70	COM2	O	
71	COM1	O	
72	COM0	O	
73	CS CHIP	O	Chip select signal to electronic pressmeter (VE) based IC302.
74	CS MICTUN	O	Chip select signal to mechanism control micro processor (VS) based IC303.
75	DATA TO MASTER	I	Serial data input signal.
76	DATA TO SLAVE	O	Serial data output signal.
77	MOTOR CLOCK	O	Serial data transfer clock.
78	N.C.	O	Not used.
79	VTR DD ON	O	VTR DC-DC converter control signal. "H" when power switch is at "Player/video" or "Camera".
80	CAM DD ON	O	CAMERA DC-DC converter control signal.
81	AVSS		A/D port GND.

Pin No.	Signal Name	I/O	Function
82	K AD IN 0	I	Key input. A/D port. REC key (PK board S10L, 20) (Note 2) P/P key (PK board S1D) STOP key (PK board S1E-1)
83	K AD IN 1	I	Key input. A/D port. PLAY key (PK board S11-1) REW key (PK board S1.20) PAUSE key (PK board S1C0)
84	K AD IN 2	I	Key input. A/D port. SET key (CK board S20-1) BRI.ACT (-) key (CK board S300) BRI.ACT (+) key (CK board S302) MEMO1 key (CK board S30L)
85	K AD IN 3	I	Key input. A/D port. FOCUS MANUAL key (CK board S311 (Note 2)) PAUSE key (CK board S300) BACK LIGHT/BRIGHT key (CK board S307) PROGRAM AE key (CK board S303)
86	K AD IN 4	I	Key input. A/D port. STANDBY ACCT key (CK board S31.1 (Note 2)) HUE/BRANCH (-) key (CK board) HUE/BRANCH (+) key (CK board) COLOR/TIER BUSKY key (CK board)
87	N.C.		Not used.
88	N.C.		
89	N.C.		
90	AVCC		A/D port power supply (+3.6V).
91	BATT SENS.	I	For main battery voltage input. (Voltage divided into 1/3.14 by R300, R307).
92	N.C.	I	Not used.
93	BRIGHTA D	I	Brightness adjusting dial input. Pulse input by dial rotation. (Note 2).
94	BRIGHT B	I	Brightness adjusting dial input. Pulse input by dial rotation. (Note 2).
95	LANC IN	I	LANC serial data input.
96	LANC OUT	O	LANC serial data output.
97	BUZZER	O	Buzzer output.
98	VCC		+3.6V power supply.
99	CL1	O	32 KHz clock oscillation circuit (for clock).
100	CL0	I	

SECTION 7
ADJUSTMENTS

7-1. CAMERA SECTION ADJUSTMENTS

When performing adjustments, refer to the layout diagrams for adjustment related parts beginning from page 7–30.

1-1. PREPARATIONS BEFORE ADJUSTMENT (CAMERA SECTION)

1-1-1. List of Service Tools

- Oscilloscope
- Adjusting driver
- Regulated power supply
- Color monitor
- Vectorscope
- Digital voltmeter

Ref. No.	Name	Parts Code	Usage
J-1	Filter for color temperature correction (C14)	J-6080-058-A	Auto white balance adjustment/check White balance adjustment/check
J-2	ND filter 1.0	J-6080-808-A	White balance check
	ND filter 0.3	J-6080-818-A	White balance check
J-3	Pattern box PTB-450	J-6082-200-A	
J-4	Color chart for pattern box	J-6020-250-A	
J-5	Adjusting remote commander (RM-95-remodeled partly)[Note 1]	J-6082-053-A	
J-6	Siemens star	J-6080-875-A	For checking the flange back
J-7	Extension cable (42P, 0.8 mm)	J-6082-285-A	For extension between the VC board (CN601) and VS board (CN203)
	Extension cable (34P, 0.8 mm)	J-6082-286-A	For extension between the AU-165 board CN1302 and VS board (CN202), For CCD-TR72/TR80/TR400/TR750
J-8	Extension cable (9P, 0.8 mm)	J-6082-288-A	For extension between the FK board and VS board (CN502)
	Extension cable (18P, 0.8 mm)	J-6080-289-A	For extension between the CK board and VS board (CN503)
J-9	Measuring pin tool for COLOR EVF	J-6082-192-A	For adjusting the COLOR EVF

Note 1: If the micro processor IC in the adjusting remote commander is not the new micro processor (UPD7503G-C56-12), the pages cannot be switched. In this case, replace with the new micro processor (8-759-148-35).

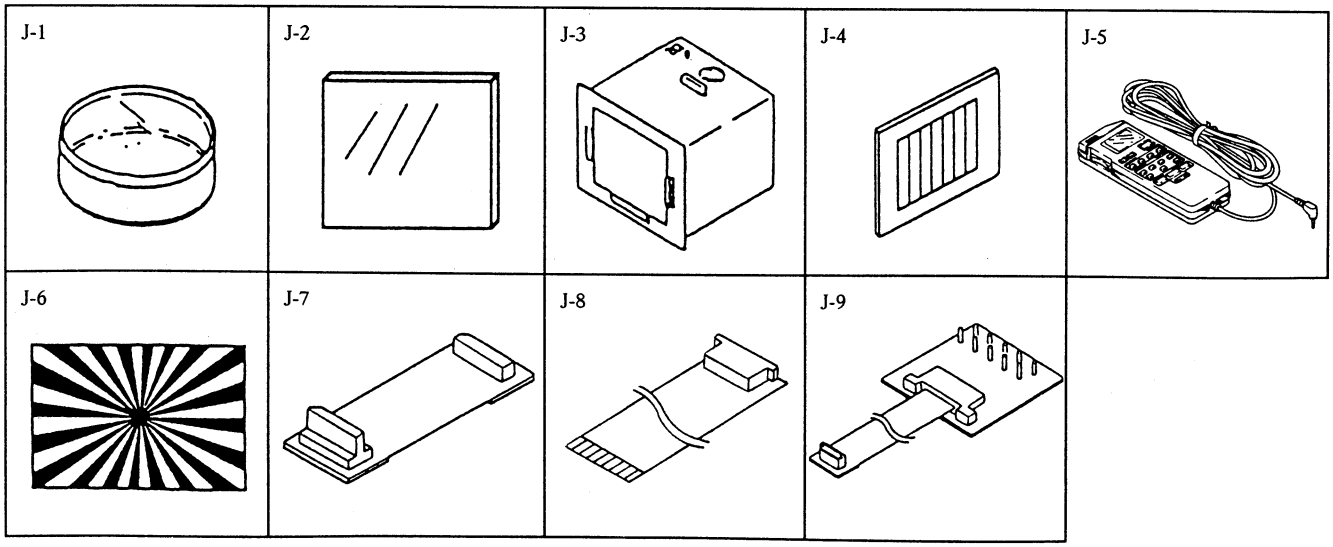

Fig. 7-1-1.

SECTION 7
ADJUSTMENTS

7-1. CAMERA SECTION ADJUSTMENTS

When performing adjustments, refer to the layout diagrams for adjustment related parts beginning from page 7–30.

1-1. PREPARATIONS BEFORE ADJUSTMENT (CAMERA SECTION)

1-1-1. List of Service Tools

- Oscilloscope
- Regulated power supply
- Vectorscope
- Adjusting driver
- Color monitor
- Digital voltmeter

Ref. No.	Name	Parts Code	Usage
J-1	Filter for color temperature correction (C14)	J-6080-058-A	Auto white balance adjustment/check White balance adjustment/check
J-2	ND filter 1.0	J-6080-808-A	White balance check
	ND filter 0.3	J-6080-818-A	White balance check
J-3	Pattern box PTB-450	J-6082-200-A	
J-4	Color chart for pattern box	J-6020-250-A	
J-5	Adjusting remote commander (RM-95-remodeled partly)[Note1]	J-6082-053-A	
J-6	Siemens star	J-6080-875-A	For checking the flange back
J-7	Extension cable (42P, 0.8 mm)	J-6082-285-A	For extension between the VC board (CN601) and VS board (CN203)
	Extension cable (34P, 0.8 mm)	J-6082-286-A	For extension between the A1J-165 board CN1302 and VS board (CN202), For CCD-TR72/TR80/TR400/TR750
J-8	Extension cable (9P, 0.8 mm)	J-6082-288-A	For extension between the FK board and VS board (CN502)
	Extension cable (18P, 0.8 mm)	J-6080-289-A	For extension between the CK board and VS board (CN503)
J-9	Measuring pin tool for COLOR EVF	J-6082-192-A	For adjusting the COLOR EVF

Note 1: If the micro processor IC in the adjusting remote commander is not the new micro processor (UPD75103G-C56-12), the pages cannot be switched. In this case, replace with the new micro processor (8-759-148-35).

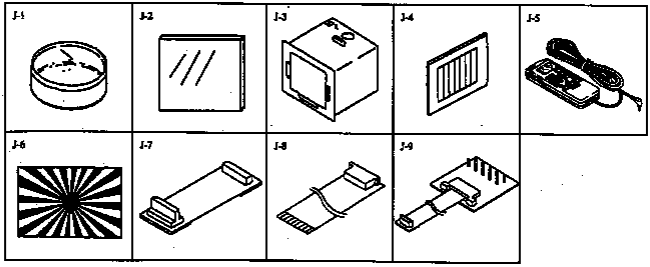

Fig. 7-1-1.

1-1-2. Preparations

Note 1: For further details of how to remove the cabinet and each board, refer to "2. Disassembly".

Note 2: When adjusting only, the lens block and VC board need not be taken apart.

1) Connect the equipments for adjusting as shown in Fig. 7-1-3.
2) The F panel block (MA board) is not required in adjustments. Remove the following connector.
   1. CN1301 of the AU board
3) If remove the cabinet (R) (Power switch, camera function switch and electronic view-finder), set to the camera power supply ON mode (Note 1), and disconnect the following connectors.
   1. CN503 of VS board
   2. CN206 of VS board
   3. CN101 of ZB board

   Be sure to exit this mode after completing the adjustment. (Note 2)
4) Turning OFF the Auto Focus Using the Adjusting Remote Commander
   1. Set data: 01 to page: 6, address: 25.
      (The auto focus will turn OFF. The focus can be adjusted using the focus button on the adjusting remote commander. But the HOLD switch must be set to OFF.)
   2. After completing the adjustment/operation check, set data: 00 to page: 6, address: 25.
5) Turning OFF the STEADY SHOT Function Using the Adjusting Remote Commander (CCD-TR82/TR400/TR550/TR750)
   1. Set data: 02 to page: 6, address: 32.
   2. Set data: 01 to page: 6, address: 33.
      (The STEADY SHOT will go OFF.)
   3. After completing the adjustment/operation check, return the data of address: 32 and address: 33 of page: 6 to 00.

Note 1: Setting the Forced Camera Power Supply ON Mode
1) Set data: 01 to page: 1, address: 00.
2) Set data: 21 to page: D, address: 03, and press the PAUSE button of the adjusting remote commander.

By carrying out the above, the camera can be operated even if the cabinet (R) has been removed. Be sure to exit the forced camera power ON mode after completing the adjustment.

Note 2: Exiting the Forced Camera Power Supply ON Mode
1) Set data: 01 to page: 1, address: 00.
2) Set data: 00 to page: D, address: 03, and press the PAUSE button of the adjusting remote commander.
3) Set data: 00 to page: 1, address: 00.

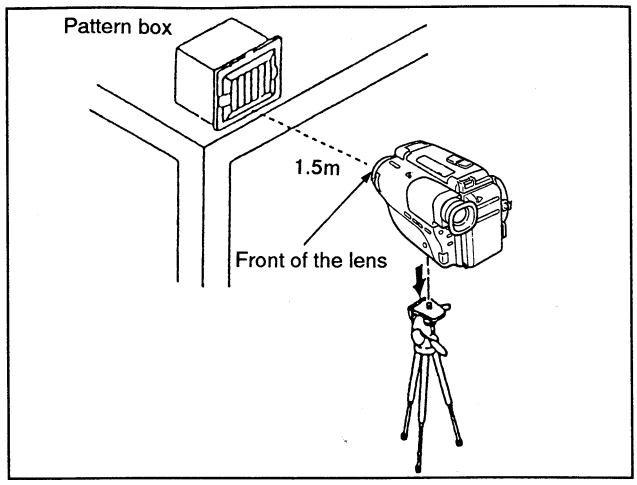

Fig. 7-1-2.

1-1-2. Preparations

Note 1: For further details of how to remove the cabinet and each board, refer to "2. Disassembly".

Note 2: When adjusting only, the lens block and VC board need not be taken apart.

1) Connect the equipments for adjusting as shown in Fig. 7-1-3.
2) The F panel block (MA board) is not required in adjustments. Remove the following connector.
   1. CN1301 of the AU board
3) If remove the cabinet (R) (Power switch, camera function switch and electronic view-finder), set to the camera power supply ON mode (Note 1), and disconnect the following connectors.
   1. CN503 of VS board
   2. CN206 of VS board
   3. CN101 of ZB board

   Be sure to exit this mode after completing the adjustment. (Note 2)
4) Turning OFF the Auto Focus Using the Adjusting Remote Commander
   1. Set data: 01 to page: 6, address: 25.
      (The auto focus will turn OFF. The focus can be adjusted using the focus button on the adjusting remote commander. But the HOLD switch must be set to OFF.)
   2. After completing the adjustment/operation check, set data: 00 to page: 6, address: 25.
5) Turning OFF the STEADY SHOT Function Using the Adjusting Remote Commander (CCD-TR82/TR400/TR550/TR750)
   1. Set data: 02 to page: 6, address: 32.
   2. Set data: 01 to page: 6, address: 33.
      (The STEADY SHOT will go OFF.)
   3. After completing the adjustment/operation check, return the data of address: 32 and address: 33 of page: 6 to 00.

Note 1: Setting the Forced Camera Power Supply ON Mode
   1) Set data: 01 to page: 1, address: 00.
   2) Set data: 21 to page: D, address: 03, and press the PAUSE button of the adjusting remote commander.

   By carrying out the above, the camera can be operated even if the cabinet (R) has been removed. Be sure to exit the forced camera power ON mode after completing the adjustment.

Note 2: Exiting the Forced Camera Power Supply ON Mode
   1) Set data: 01 to page: 1, address: 00.
   2) Set data: 00 to page: D, address: 03, and press the PAUSE button of the adjusting remote commander.
   3) Set data: 00 to page: 1, address: 00.

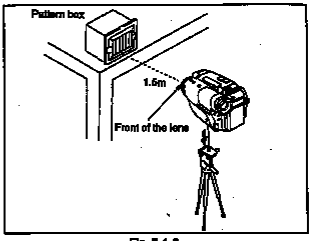

Fig. 7-1-2.

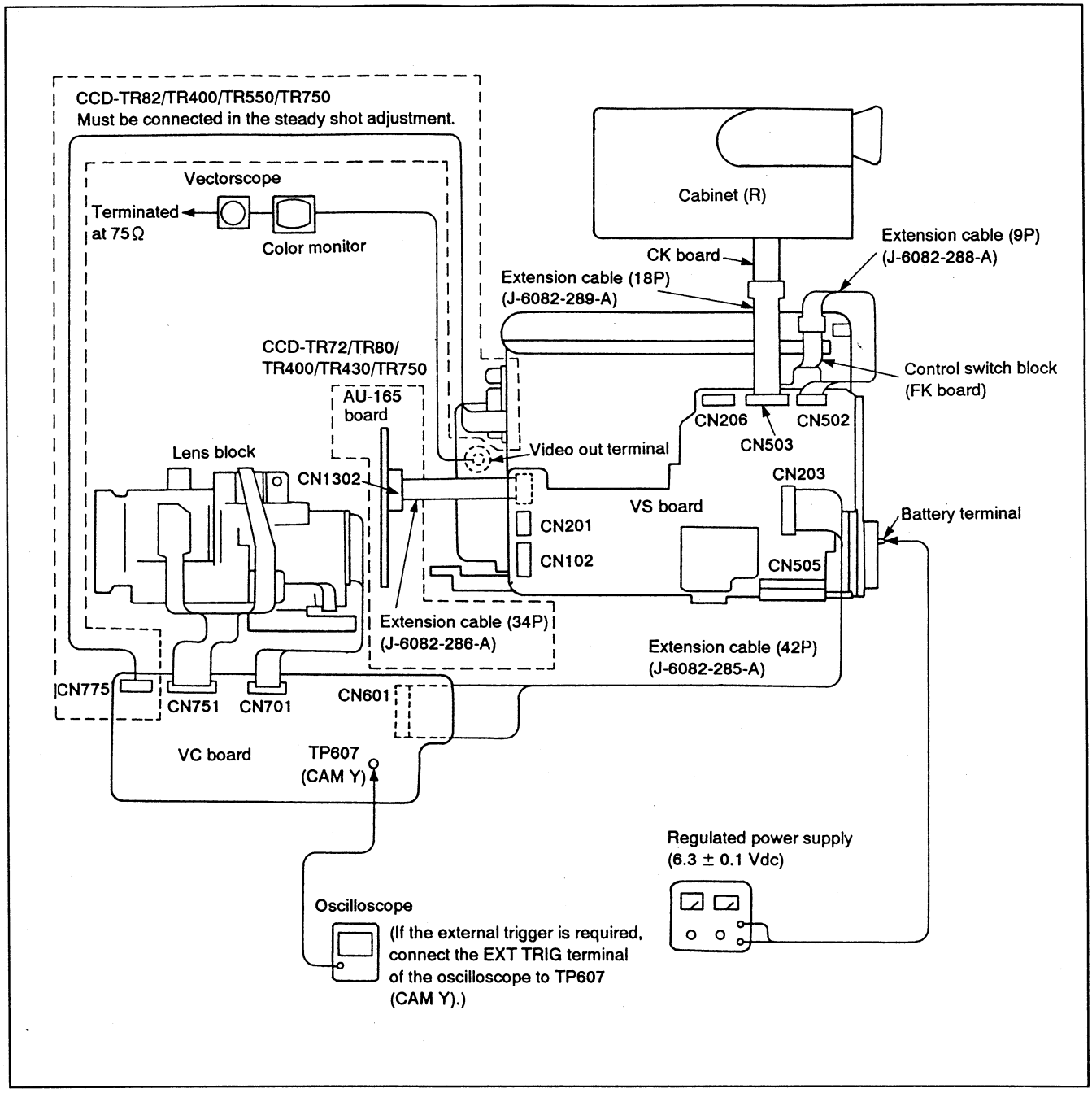
CCD-TR82/TR400/TR550/TR750
Must be connected in the steady shot adjustment.
Vectorscope
Terminated at 75Ω
Color monitor
Cabinet (R)
CK board
Extension cable (9P)
(J-6082-288-A)
Extension cable (18P)
(J-6082-289-A)
CCD-TR72/TR80/
TR400/TR430/TR750
AU-165
board
Control switch block
(FK board)
CN206
CN502
CN503
Video out terminal
Lens block
CN1302
CN203
VS board
Battery terminal
CN201
CN102
CN505
Extension cable (34P)
(J-6082-286-A)
Extension cable (42P)
(J-6082-285-A)
CN775
CN751
CN701
CN601
VC board
TP607
(CAM Y)
Regulated power supply
(6.3 ± 0.1 Vdc)
Oscilloscope
(If the external trigger is required,
connect the EXT TRIG terminal
of the oscilloscope to TP607
(CAM Y).)

Fig. 7-1-3.

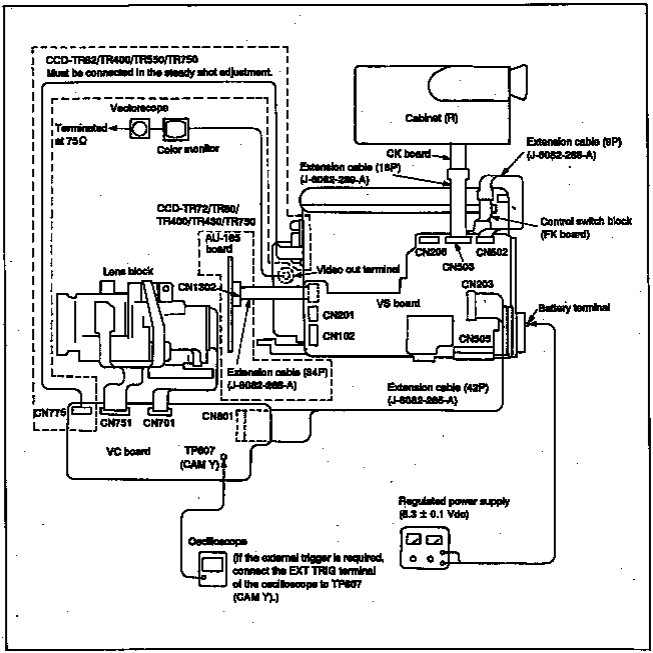
CCD-TR82/TR400/TR550/TR750
Must be connected in the steady shot adjustment.
Vectorscope
Terminated at 75Ω
Color monitor
CCD-TR72/TR80/
TR400/TR430/TR730
AU-165
board
Lens block
CN1302
Video out terminal
Cabinet (R)
CK board
Extension cable (8P)
(J-6082-288-A)
Extension cable (18P)
(J-6082-289-A)
Control switch block
(FK board)
CN206
CN502
CN503
CN203
VS board
CN201
CN102
CN509
Battery terminal
Extension cable (34P)
(J-6082-288-A)
Extension cable (42P)
(J-6082-286-A)
CN775
CN751
CN701
CN801
VC board
TP607
(CAM Y)
Regulated power supply
(8.3 ± 0.1 Vdc)
Oscilloscope
(If the external trigger is required, connect the EXT TRIG terminal of the oscilloscope to TP607 (CAM Y).)

Fig. 7-1-3.

1-1-3. Precautions

1. Switch settings

Adjust the switches to the following positions, and adjust without loading the cassette tape, unless specified otherwise.

1. Camera/player power switch
   (Control switch block (Control switch block (CK board))
   ·····Camera
2. Standby switch (Control switch block (FK board)) ·· Standby
3. PROGRAM AE button (Control switch block (CK board))
   ·····Off
4. FOCUS switch (Control switch block (CK board)) ···Manual
5. BACK LIGHT button (Control switch block (CK board))
   ·····Off
6. STEADY SHOT button (CCD-TR82/TR400/TR550/TR750)
   (Control switch block (CK board))·····Off

2. Adjusting Procedure

Adjust in the given order.

3. Subject

1) Color bar chart (Standard picture frame)
   Adjust the picture frame as shown in Fig. 7-1-4. if adjustments are performed using the color bar chart. (Standard picture frame)
2) White pattern (Standard picture frame)
   Remove the color bar chart from the pattern box, and so that the white pattern will be displayed.
   Don't touch the zoom switch.

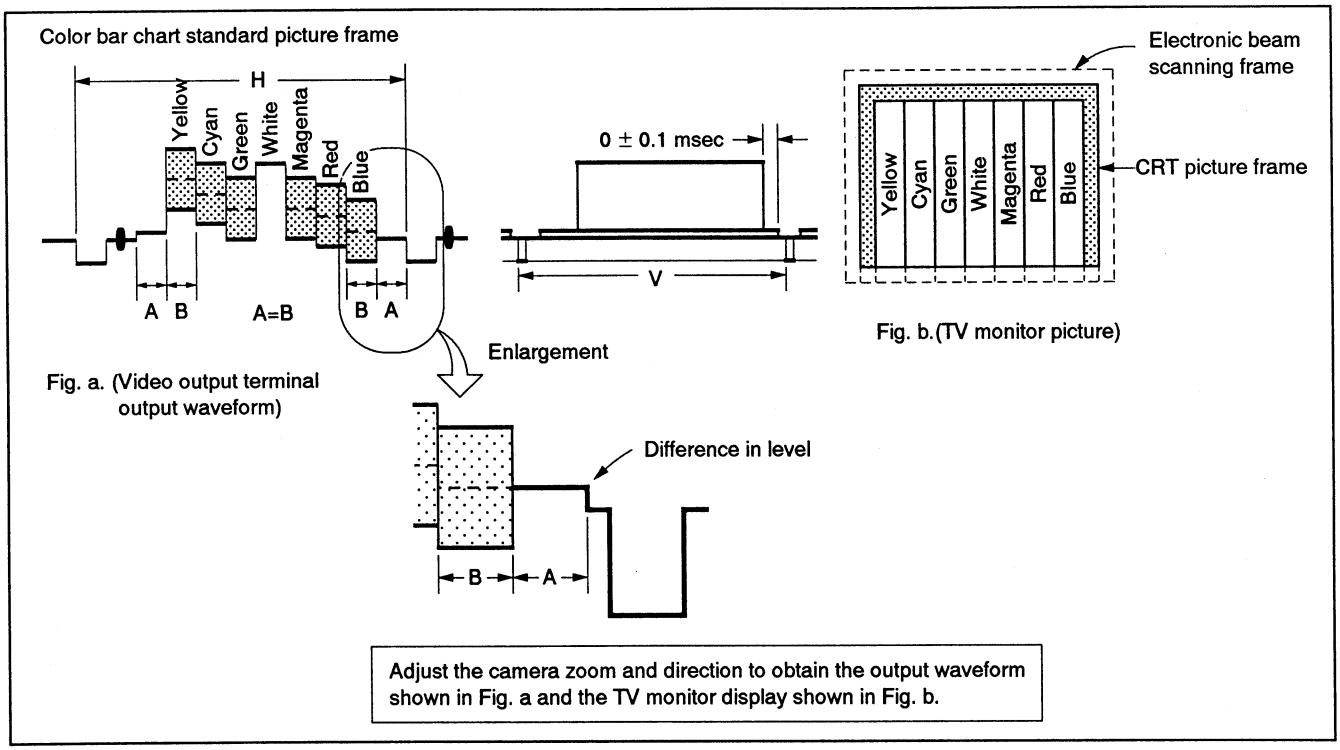

Fig. 7-1-4.

3) Chart for flange back adjustment
   Combine a white A0 size (1189 mm× 841 mm) paper to a black one, and make the chart shown in Fig. 7-1-5.

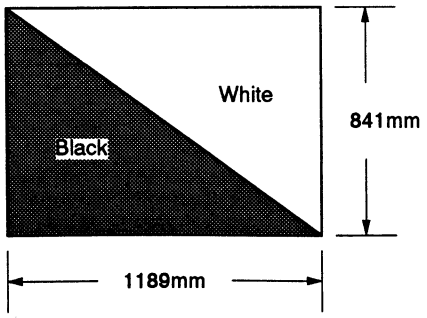

Fig. 7-1-5.

Note: Use the non-reflecting and non-glazing vellum paper whose size is more than A0, and make the boundary between white and black to be smoothly flat.

1-1-3. Precautions

1. Switch settings

Adjust the switches to the following positions, and adjust without loading the cassette tape, unless specified otherwise.

1. Camera/player power switch
   (Control switch block (Control switch block (CK board))
   .....Camera
2. Standby switch (Control switch block (FK board)) --Standby
3. PROGRAM AE button (Control switch block (CK board))
   .....Off
4. FOCUS switch (Control switch block (CK board)) ---Manual
5. BACK LIGHT button (Control switch block (CK board))
   .....Off
6. STEADY SHOT button (CCD-TR82/TR400/TR550/TR750)
   (Control switch block (CK board))-----Off

2. Adjusting Procedure

Adjust in the given order.

3. Subject

1) Color bar chart (Standard picture frame)
   Adjust the picture frame as shown in Fig. 7-1-4. if adjustments are performed using the color bar chart.
   (Standard picture frame)
2) White pattern (Standard picture frame)
   Remove the color bar chart from the pattern box, and so that the white pattern will be displayed.
   Don't touch the zoom switch.

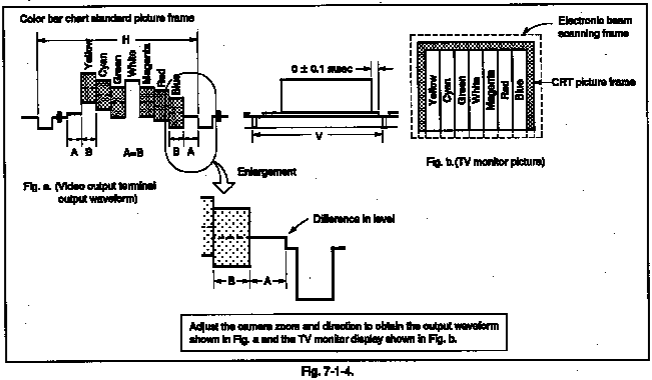

Fig. 7-1-4.

3) Chart for flange back adjustment
   Combine a white A0 size (1189 mm× 841 mm) paper to a black one, and make the chart shown in Fig. 7-1-5.

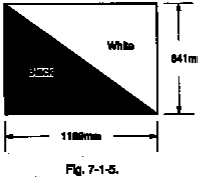

Fig. 7-1-5.

Note: Use the non-reflecting and non-glazing vellum paper whose size is more than A0, and make the boundary between white and black to be smoothly flat.

1-1-4. Adjusting Remote Commander

The camera section is adjusted by changing the constant or coefficient of the digital signal processing calculation, or modifying the output voltage of the EVR IC (VC board IC603). This is controlled by the camera micro processor (VC board IC602), which reads the data written in the nonvolatile memory (VC board IC601: EEPROM), and transmits it to the digital signal processing circuit and EVR.

To perform adjustments, adjustment data written in the nonvolatile memory must be rewritten, using the adjusting remote commander.

The adjusting remote commander uses the remote commander signal line (LANC) to communicate mutually with the camera microprocessor. The page, address and the up/down commands of the data are transmitted from the adjusting remote commander to the camera micro processor. And, the page, address, and data are transmitted for the vice versa.

1. Using the adjusting remote commander

1) Connect the adjusting remote commander to the remote terminal.
2) Adjust the HOLD switch of the adjusting remote commander to "HOLD" (SERVICE position).

If it has been properly connected, the LCD on the adjusting remote commander will display as shown in Fig. 7-1-6.

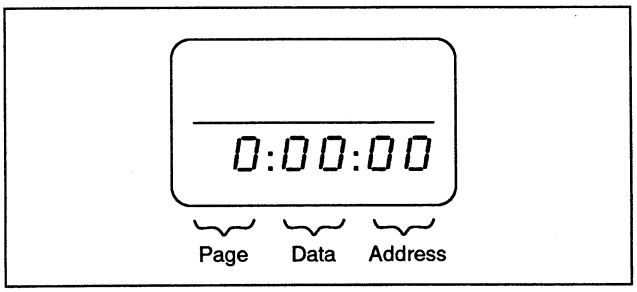

Fig. 7-1-6.

3) Operate the adjusting remote commander as follows.
   - Changing the page
     The page increases when the EDIT SEARCH+ button is pressed, and decreases when the EDIT SEARCH– button is pressed. There are altogether 16 pages, from 0 to F.

Hexadecimal notation	0	1	2	3	4	5	6	7	8	9	A	B	C	D	E	F
LCD Display	0	1	2	3	4	5	6	7	8	9	A	b	c	d	E	F
Decimal notation conversion value	0	1	2	3	4	5	6	7	8	9	10	11	12	13	14	15

Table 7-1-1.

   - Changing the address
     The address increases when the FF (▶▶) button is pressed, and decreases when the REW (◀◀) button is pressed. There are altogether 256 addresses, from 00 to FF.
   - Changing the data (Data setting)
     The data increases when the PLAY (▶) button is pressed, and decreases when the STOP (■) button is pressed.
     There are altogether 256 data, from 00 to FF.
   - Writing the adjustment data
     The PAUSE button must be pressed to write the adjustment data (F page) in the nonvolatile memory.
     (The new adjustment data will not be recorded in the nonvolatile memory if this step is not performed.)
4) Select page: 6, address: 00, and adjust the data to 01. Page F, and enables the camera section (Addresses 01 to BF of page F) to be adjusted.
5) After completing all adjustments, turn off the main power supply (6.3V) once.

2. Precautions upon using the adjusting remote commander

Mishandling of the adjusting remote commander may erase the correct adjustment data at times. To prevent this, it is recommended that all adjustment data be noted down before beginning adjustments and new adjustment data after each adjustment.

1-1-4. Adjusting Remote Commander

The camera section is adjusted by changing the constant or coefficient of the digital signal processing calculation, or modifying the output voltage of the EVR IC (VC board IC603). This is controlled by the camera micro processor (VC board IC602), which reads the data written in the nonvolatile memory (VC board IC601: EEPROM), and transmits it to the digital signal processing circuit and EVR.

To perform adjustments, adjustment data written in the nonvolatile memory must be rewritten, using the adjusting remote commander.

The adjusting remote commander uses the remote commander signal line (LANC) to communicate mutually with the camera microprocessor. The page, address and the up/down commands of the data are transmitted from the adjusting remote commander to the camera micro processor. And, the page, address, and data are transmitted for the vice versa.

1. Using the adjusting remote commander

1) Connect the adjusting remote commander to the remote terminal.
2) Adjust the HOLD switch of the adjusting remote commander to "HOLD" (SERVICE position).

If it has been properly connected, the LCD on the adjusting remote commander will display as shown in Fig. 7-1-6.

Fig. 7-1-6.

3) Operate the adjusting remote commander as follows.
   - Changing the page
     The page increases when the EDIT SEARCH+ button is pressed, and decreases when the EDIT SEARCH− button is pressed. There are altogether 16 pages, from 0 to F.

Hexadecimal notation	0	1	2	3	4	5	6	7	8	9	A	B	C	D	E	F
LCD Display	0	1	2	3	4	5	6	7	8	9	A	b	c	d	E	F
Decimal notation conversion value	0	1	2	3	4	5	6	7	8	9	10	11	12	13	14	15

Table 7-1-1.

   - Changing the address
     The address increases when the FF (▶▶) button is pressed, and decreases when the REW (◀◀) button is pressed. There are altogether 256 addresses, from 00 to FF.
   - Changing the data (Data setting)
     The data increases when the PLAY (▶) button is pressed, and decreases when the STOP (■) button is pressed.
     There are altogether 256 data, from 00 to FF.
   - Writing the adjustment data
     The PAUSE button must be pressed to write the adjustment data (F page) in the nonvolatile memory.
     (The new adjustment data will not be recorded in the nonvolatile memory if this step is not performed.)
4) Select page: 6, address: 00, and adjust the data to 01. Page F, and enables the camera section (Addresses 01 to BF of page F) to be adjusted.
5) After completing all adjustments, turn off the main power supply (6.3V) once.

2. Precautions upon using the adjusting remote commander

Mishandling of the adjusting remote commander may erase the correct adjustment data at times. To prevent this, it is recommended that all adjustment data be noted down before beginning adjustments and new adjustment data after each adjustment.

1-1-5. Page F Address List

Note 1: The data already listed in the adjustment data memo column are fixed values.

Note 2: The adjustment data initial values are values just after executing "Page F Data Initialization" and "Page F Data Modification". They are different from the values after executing all adjustments.

Note 3: In some cases, data have been input to the page F addresses C0 to FF. This has no relation to the adjustments.

Note 4: No mark : CCD-TR42/TR72/TR80/TR430
( ) : CCD-TR82/TR550
〈 〉 : CCD-TR70
《 》 : CCD-TR400/TR750

Address	Adjustment data	
	Initial value	Memo column
00	5C (5A) 〈5E〉 《56》	5C (5A) 〈5E〉 《56》
01	0A (00)	0A (00)
02	00	00
03	00 (07)	00 (07)
04	80	
05	80	
06	80	
07	80	
08	2D	
09	26	
0A	FA	
0B	F1	
0C	30	
0D	00	
0E	58	
0F	00	
10	E0	E0
11	8F	
12	6C	
13	36	
14	3C	
15	B6	
16	0D	
17	A3	
18	12	
19	8E	
1A	10	
1B	E2	
1C	0C	0C
1D	00	00
1E	80	
1F	80	
20	80 (79)	80 (79)
21	80 (79)	80 (79)
22	00	00
23	59	53
24	43	43
25	A5 (B5)	A5 (B5)
26	23	23
27	3A	3A
28	A2	A2
29	0B	0B

Table 7-1-2 (1).

1-1-5. Page F Address List

Note 1: The data already listed in the adjustment data memo column are fixed values.

Note 2: The adjustment data initial values are values just after executing "Page F Data Initialization" and "Page F Data Modification". They are different from the values after executing all adjustments.

Note 3: In some cases, data have been input to the page F addresses C0 to FF. This has no relation to the adjustments.

Note 4: No mark : CCD-TR42/TR72/TR80/TR430
( ) : CCD-TR82/TR550
〔 〕 : CCD-TR70
{ } : CCD-TR400/TR750

Address	Adjustment data	
	Initial value	Memo column
00	5C (5A) {5E} {56}	5C (5A) {5E} {56}
01	0A (00)	0A (00)
02	00	00
03	00 (07)	00 (07)
04	80	
05	80	
06	80	
07	80	
08	2D	
09	26	
0A	FA	
0B	F1	
0C	30	
0D	00	
0E	58	
0F	00	
10	B0	B0
11	8F	
12	6C	
13	36	
14	3C	
15	B6	
16	0D	
17	A3	
18	12	
19	8E	
1A	10	
1B	E2	
1C	0C	0C
1D	00	00
1E	80	
1F	80	
20	80 (79)	80 (79)
21	80 (79)	80 (79)
22	00	00
23	59	53
24	43	43
25	A5 (B5)	A5 (B5)
26	23	23
27	3A	3A
28	A2	A2
29	0B	0B

Table 7-1-2 (1).

Address	Adjustment data	
	Initial value	Memo column
2A	0C (2C)	0C (2C)
2B	58 (50)	58 (50)
2C	FF	FF
2D	06 ((04))	06 ((04))
2E	17 (16)	17 (16)
2F	22 (27) 《29》	22 (27) 《29》
30	08	08
31	00	00
32	50 (47) 《48》	50 (47) 《48》
33	68	68
34	00 (02)	00 (02)
35	30 (50)	30 (50)
36	02	02
37	00	00
38	76	76
39	6A	6A
3A	80	80
3B	20	20
3C	F0	F0
3D	03 (02)	03 (02)
3E	00	
3F	00	
40	00	
41	00	
42	00	
43	00	
44	00	
45	00	00
46	00	
47	00	
48	00	
49	00	
4A	00	
4B	00	
4C	00	
4D	00	
4E	00	00
4F	20	20
50	05 (32)	05 (32)
51	02	02
52	66	66
53	18	18

Table 7-1-2 (2).

Address	Adjustment data	
	Initial value	Memo column
54	66 (6B)	66 (6B)
55	9F	9F
56	66	66
57	66 (6C)	66 (6C)
58	59 (5C)	59 (5C)
59	83	83
5A	67	67
5B	5C	5C
5C	5C	5C
5D	4A	4A
5E	1E (20)	1E (20)
5F	5C	5C
60	3A (3C)	3A (3C)
61	33	33
62	0C	0C
63	26	26
64	04	04
65	02	02
66	00	00
67	00	00
68	00	00
69	00	00
6A	00	00
6B	00	00
6C	00	00
6D	00	00
6E	00	00
6F	34	34
70	10	10
71	26	26
72	0F	0F
73	0F	0F
74	00	00
75	23	23
76	1B	1B
77	E0	E0
78	A0	A0
79	30	30
7A	10	10
7B	50	50
7C	58	58
7D	88	88

Table 7-1-2 (3).

Address	Adjustment data	
	Initial value	Memo column
2A	0C (2C)	0C (2C)
2B	58 (50)	58 (50)
2C	FF	FF
2D	06 ((04))	06 ((04))
2E	17 (16)	17 (16)
2F	22 (27) {29}	22 (27) {29}
30	08	08
31	00	00
32	50 (47) {48}	50 (47) {48}
33	68	68
34	00 (02)	00 (02)
35	30 (50)	30 (50)
36	02	02
37	00	00
38	76	76
39	6A	6A
3A	80	80
3B	20	20
3C	F0	F0
3D	03 (02)	03 (02)
3E	00	
3F	00	
40	00	
41	00	
42	00	
43	00	
44	00	
45	00	00
46	00	
47	00	
48	00	
49	00	
4A	00	
4B	00	
4C	00	
4D	00	
4E	00	00
4F	20	20
50	05 (32)	05 (32)
51	02	02
52	66	66
53	18	18

Table 7-1-2 (2).

Address	Adjustment data	
	Initial value	Memo column
54	66 (6B)	66 (6B)
55	9F	9F
56	66	66
57	66 (6C)	66 (6C)
58	59 (5C)	59 (5C)
59	83	83
5A	67	67
5B	5C	5C
5C	5C	5C
5D	4A	4A
5E	1E (20)	1E (20)
5F	5C	5C
60	3A (3C)	3A (3C)
61	33	33
62	0C	0C
63	26	26
64	04	04
65	02	02
66	00	00
67	00	00
68	00	00
69	00	00
6A	00	00
6B	00	00
6C	00	00
6D	00	00
6E	00	00
6F	34	34
70	10	10
71	26	26
72	0F	0F
73	0F	0F
74	00	00
75	23	23
76	1B	1B
77	E0	E0
78	A0	A0
79	30	30
7A	10	10
7B	50	50
7C	58	58
7D	88	88

Table 7-1-2 (3).

Address	Adjustment data	
	Initial value	Memo column
7E	66	66
7F	46	46
80	8F	8F
81	13	13
82	30	30
83	60	60
84	70	70
85	80	80
86	A0	A0
87	C0	C0
88	70	70
89	78	78
8A	80	80
8B	90	90
8C	A0	A0
8D	40	40
8E	FF	FF
8F	00	00
90	00 〈11〉	00 〈11〉
91	77	77
92	00	00
93	FB	FB
94	02	02
95	32	32
96	6B	6B
97	8D	8D
98	A1	A1
99	30	30
9A	30	30
9B	21	21
9C	72	72
9D	00	00
9E	00	00
9F	00	00
A0	00	00
A1	00	00
A2	00	00
A3	02	02
A4	80	80
A5	00	00
A6	80	80
A7	00	00

Table 7-1-2 (4).

Address	Adjustment data	
	Initial value	Memo column
A8	00	00
A9	80	80
AA	00	00
AB	00	00
AC	02	02
AD	44	44
AE	3D	3D
AF	1B (25)	1B (25)
B0	3D	3D
B1	1B (25)	1B (25)
B2	A4 (A2)	A4 (A2)
B3	4B	4B
B4	00	00
B5	20	20
B6	00	00
B7	05	05
B8	00	00
B9	20	20
BA	00	00
BB	70 (6E)	70 (6E)
BC	35 (32)	35 (32)
BD	54	54
BE		
BF		
C0 to EF		
F0		
F1		
F2		
F3		
F4		
F5		
F6		
F7		
F8		
F9		
FA		
FB		
FC		
FD		
FE		
FF		

Table 7-1-2 (5).

Address	Adjustment data	
	Initial value	Memo column
7E	66	66
7F	46	46
80	8F	8F
81	13	13
82	30	30
83	60	60
84	70	70
85	80	80
86	A0	A0
87	C0	C0
88	70	70
89	78	78
8A	80	80
8B	90	90
8C	A0	A0
8D	40	40
8E	FF	FF
8F	00	00
90	00 (11)	00 (11)
91	77	77
92	00	00
93	FB	FB
94	02	02
95	32	32
96	6B	6B
97	8D	8D
98	A1	A1
99	30	30
9A	30	30
9B	21	21
9C	72	72
9D	00	00
9E	00	00
9F	00	00
A0	00	00
A1	00	00
A2	00	00
A3	02	02
A4	80	80
A5	00	00
A6	80	80
A7	00	00

Table 7-1-2 (4).

Address	Adjustment data	
	Initial value	Memo column
A8	00	00
A9	80	80
AA	00	00
AB	00	00
AC	02	02
AD	44	44
AE	3D	3D
AF	1B (25)	1B (25)
B0	3D	3D
B1	1B (25)	1B (25)
B2	A4 (A2)	A4 (A2)
B3	4B	4B
B4	00	00
B5	20	20
B6	00	00
B7	05	05
B8	00	00
B9	20	20
BA	00	00
BB	70 (6E)	70 (6E)
BC	35 (32)	35 (32)
BD	54	54
BE		
BF		
C0 to EF		
F0		
F1		
F2		
F3		
F4		
F5		
F6		
F7		
F8		
F9		
FA		
FB		
FC		
FD		
FE		
FF		

Table 7-1-2 (5).

1-1-6. Data Processing

The calculation of the DDS display and the adjusting remote commander display data (hexadecimal notation) are required for obtaining the adjustment data of some adjustment items. In this case, after converting the hexadecimal notation to decimal notation, calculate and convert the result to hexadecimal notation, and use it as the adjustment data. Table 7-1-3. indicates the hexadecimal notation-the decimal notation calculation table.

Hexadecimal notation-Decimal notation

②

The lower digits of the hexadecimal notation / The upper digits of the hexadecimal notation	0	1	2	3	4	5	6	7	8	9	A (A)	B (b)	C (c)	D (d)	E (E)	F (F)
0	0	1	2	3	4	5	6	7	8	9	10	11	12	13	14	15
1	16	17	18	19	20	21	22	23	24	25	26	27	28	29	30	31
2	32	33	34	35	36	37	38	39	40	41	42	43	44	45	46	47
3	48	49	50	51	52	53	54	55	56	57	58	59	60	61	62	63
4	64	65	66	67	68	69	70	71	72	73	74	75	76	77	78	79
5	80	80	82	83	84	85	86	87	88	89	90	91	92	93	94	95
6	96	97	98	99	100	101	102	103	104	105	106	107	108	109	110	111
7	112	113	114	115	116	117	118	119	120	121	122	123	124	125	126	127
8	128	129	130	131	132	133	134	135	136	137	138	139	140	141	142	143
9	144	145	146	147	148	149	150	151	152	153	154	155	156	157	158	159
A (A)	160	161	162	163	164	165	166	167	168	169	170	171	172	173	174	175
① → B (b)	176	177	178	179	180	180	182	183	184	185	186	187	188	189	190	191
C (c)	192	193	194	195	196	197	198	199	200	201	202	203	204	205	206	207
D (d)	208	209	210	211	212	213	214	215	216	217	218	219	220	221	222	223
E (E)	224	225	226	227	228	229	230	231	232	233	234	235	236	237	238	239
F (F)	240	241	242	243	244	245	246	247	248	249	250	251	252	253	254	255

Note: ( ) indicate the adjusting remote control unit display.

(Example) In the case that the DDS display and the adjusting remote control unit display are BD (b d).
As the upper digit of the hexadecimal notation is B (b), and the lower digit is D (d), the intersection "189" of the ① and ② in the above table is the decimal notation to be calculated.

Table 7-1-3.

1-1-6. Data Processing

The calculation of the DDS display and the adjusting remote commander display data (hexadecimal notation) are required for obtaining the adjustment data of some adjustment items. In this case, after converting the hexadecimal notation to decimal notation, calculate and convert the result to hexadecimal notation, and use it as the adjustment data. Table 7-1-3. indicates the hexadecimal notation-the decimal notation calculation table.

Hexadecimal notation-Decimal notation

②

The lower digits of the hexadecimal notation / The upper digits of the hexadecimal notation	0	1	2	3	4	5	6	7	8	9	A (A)	B (b)	C (c)	D (d)	E (E)	F (F)
0	0	1	2	3	4	5	6	7	8	9	10	11	12	13	14	15
1	16	17	18	19	20	21	22	23	24	25	26	27	28	29	30	31
2	32	33	34	35	36	37	38	39	40	41	42	43	44	45	46	47
3	48	49	50	51	52	53	54	55	56	57	58	59	60	61	62	63
4	64	65	66	67	68	69	70	71	72	73	74	75	76	77	78	79
5	80	80	82	83	84	85	86	87	88	89	90	91	92	93	94	95
6	96	97	98	99	100	101	102	103	104	105	106	107	108	109	110	111
7	112	113	114	115	116	117	118	119	120	121	122	123	124	125	126	127
8	128	129	130	131	132	133	134	135	136	137	138	139	140	141	142	143
9	144	145	146	147	148	149	150	151	152	153	154	155	156	157	158	159
A (A)	160	161	162	163	164	165	166	167	168	169	170	171	172	173	174	175
① → B (b)	176	177	178	179	180	180	182	183	184	185	186	187	188	189	190	191
C (c)	192	193	194	195	196	197	198	199	200	201	202	203	204	205	206	207
D (d)	208	209	210	211	212	213	214	215	216	217	218	219	220	221	222	223
E (E)	224	225	226	227	228	229	230	231	232	233	234	235	236	237	238	239
F (F)	240	241	242	243	244	245	246	247	248	249	250	251	252	253	254	255

Note: ( ) indicate the adjusting remote control unit display.

(Example) In the case that the DDS display and the adjusting remote control unit display are BD (b d).
As the upper digit of the hexadecimal notation is B (b), and the lower digit is D (d), the intersection "189" of the ① and ② in the above table is the decimal notation to be calculated.

Table 7-1-3.

Using the PROGRAM AE Function

You can select from four PROGRAM AE (Auto Exposure) modes to suit your shooting situation. When you use PROGRAM AE, you can get a Portrait effect (the subject is in focus and the background is out of focus), capture high-speed action or night views.

Selecting the Best Mode

Select the best mode by using the following examples.

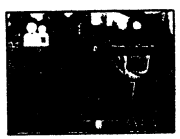


Portrait mode
- A still subject such as a person or flower
- Subject behind an obstacle such as a net
- Zooming in on a subject in telephoto

Sports mode
- Outdoor sports scenes such as football, tennis, golf or skiing
- A landscape in a moving car

High-speed shutter mode
- A golf swing or a tennis match in fine weather with the ball captured clearly
- Playing back certain scenes with high-speed movements in clear, sharp picture

Twilight mode
Recording night views neon signs or fireworks

Using the PROGRAM AE Function

Press PROGRAM AE repeatedly so that the desired mode indicator appears inside the viewfinder.

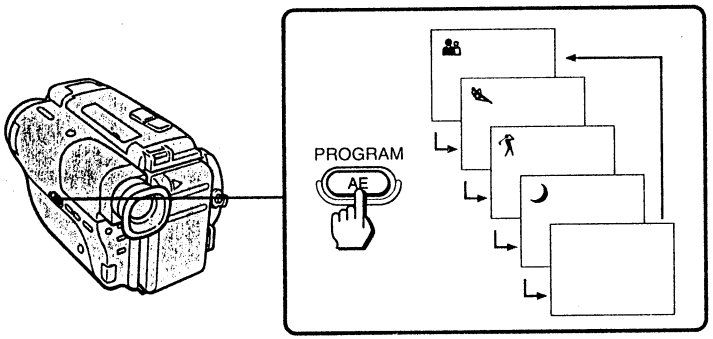

Note on shutter speed
The shutter speed in each PROGRAM AE mode is as follows:
Portrait mode – between 1/60 to 1/2000
Sports mode – between 1/60 to 1/500
High-speed shutter mode – 1/4000
Twilight mode – 1/60
Normal mode – 1/60

Fade-in and Fade-out

You can fade in or fade out to give your recording a professional appearance. When fading in, the picture will gradually appear from black or mosaic. The sound will also gradually increase. When fading out, the picture will gradually fade to black or mosaic. The sound will also decrease.

When Fading in [a]
(1) During the camcorder is in Standby mode, press FADER. The fade indicator starts flashing.
(2) Press START/STOP to start recording. The fade indicator stops flashing.

When Fading out [b]
(1) During recording, press FADER. The fade indicator starts flashing. **(2)** Press START/STOP to stop recording. The fade indicator stops flashing and recording stops.

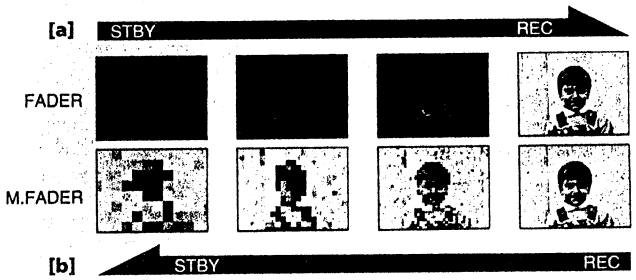

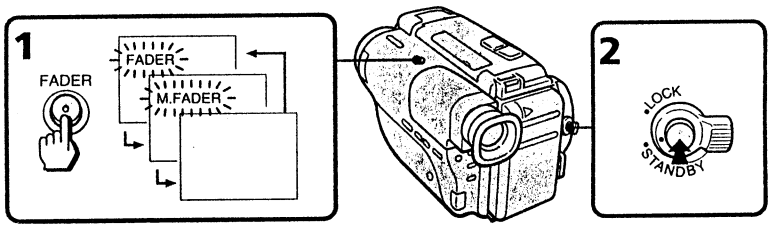

To Cancel the Fade-in/out Function
Before pressing START/STOP, press FADER once or twice until the fade indicator disappears.

When the date/time indicator is displayed
The date/time does not fade in nor fade out.

Using the PROGRAM AE Function

You can select from four PROGRAM AE (Auto Exposure) modes to suit your shooting situation. When you use PROGRAM AE, you can get a Portrait effect (the subject is in focus and the background is out of focus), capture high-speed action or night views.

Selecting the best mode

Select the best mode by using the following examples.

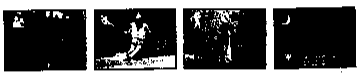

Portrait mode
- A still subject such as a person or flower
- Subject behind an obstacle such as a net
- Zooming in on a subject in telephoto

Sports mode
- Outdoor sports scenes such as football, tennis, golf or sailing
- A landscape in a moving car

High-speed shutter mode
- A golf swing or a tennis match in fine weather with the ball captured clearly
- Playing back certain scenes with high-speed movements in clear, sharp picture

Twilight mode
Recording night views such as neon signs or fireworks

Using the PROGRAM AE Function

Press PROGRAM AE repeatedly so that the desired mode indicator appears inside the viewfinder.

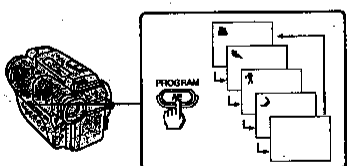

Note on shutter speed
The shutter speed in each PROGRAM AE mode is as follows:
Portrait mode – between 1/60 to 1/2000
Sports mode – between 1/60 to 1/500
High-speed shutter mode – 1/4000
Twilight mode – 1/60
Normal mode – 1/60

Fade-in and Fade-out

You can fade in or fade out to give your recording a professional appearance. When fading in, the picture will gradually appear from black or monochrome. The sound will also gradually increase. When fading out, the picture will gradually fade to black or monochrome. The sound will also decrease.

When Fading In [a]
(1) During the camcorder is in Standby mode, press FADER. The fade indicator starts flashing.
(2) Press START/STOP to start recording. The fade indicator stops flashing.

When Fading out [b]
(1) During recording, press FADER. The fade indicator starts flashing. (2) Press START/STOP to stop recording. The fade indicator stops flashing and recording stops.

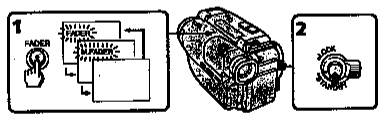

To Cancel the Fade-in/out Function
Before pressing START/STOP, press FADER once or twice until the fade indicator disappears.

When the date/time indicator is displayed
The date/time does not fade in nor fade out.

Releasing the Steady Shot Function

— For the model with the STEADY SHOT switch (CCD-TR82 only)

When you shoot, the indicator appears in the viewfinder. This indicates that the Steady Shot function is working and the camcorder compensates for camera-shake.

You can release the Steady Shot function. Do not use the Steady Shot function such as when shooting stationary object with a tripod.

Set STEADY SHOT to OFF.

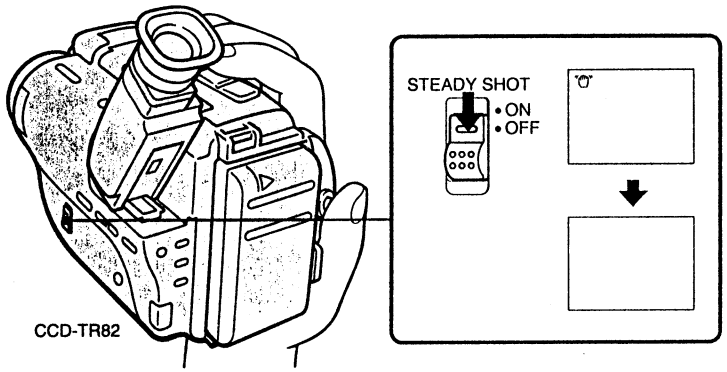

To Activate the Steady Shot Function Again

Set STEADY SHOT to ON.

Notes on the Steady Shot Function

- The Steady Shot function will not correct excessive camera-shake.
- When you switch the STEADY SHOT, the exposure may vary.

Changing the Mode Settings

You can change the mode settings in the menu system to further enjoy the features and functions. **(1)** Press MENU to display the menu in the viewfinder. **(2)** Press ↑ or ↓ to select the desired item, then press EXECUTE. **(3)** Press ↑ or ↓ to set the desired mode, then press EXECUTE. If you want to change the other modes, repeat steps 2 and 3. **(4)** Press MENU to erase the menu display.

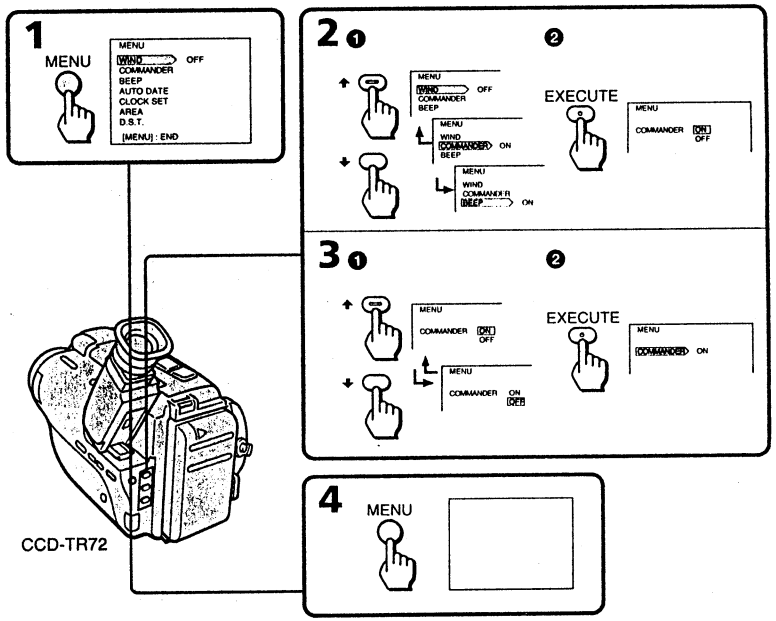

Note on BACK UP

When BACK UP indicator appears on the menu display, the settings of items are retained even when the battery is removed, as long as the lithium battery is in place.

Selecting the Mode Setting of Each Item

Common Items in CAMERA and PLAYER Modes

COMMANDER <ON/OFF>

- Select ON when using the supplied Remote Commander for the camcorder.
- Select OFF when not using the Remote Commander for the camcorder.

BEEP <ON/OFF>

- Select ON so that beeps sound when you start/stop recording.
- Select OFF when you do not want to hear the beep sound.

See the next page for further information.

Releasing the Steady Shot Function

— For the model with the STEADY SHOT switch (CCD-TR82 only)

When you shoot, the ☞ indicator appears in the viewfinder. This indicates that the Steady Shot function is working and the camcorder compensates for camera-shake.

You can release the Steady Shot function. Do not use the Steady Shot function such as when shooting stationary object with a tripod.

Set STEADY SHOT to OFF.

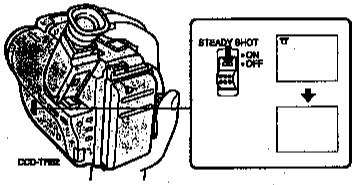

To Activate the Steady Shot Function Again
Set STEADY SHOT to ON.

Notes on the Steady Shot Function
- The Steady Shot function will not correct excessive camera-shake.
- When you switch the STEADY SHOT, the exposure may vary.

Changing the Mode Settings

You can change the mode settings in the menu system to further enjoy the features and functions.
(1) Press MENU to display the menu in the viewfinder. (2) Press ❖ or ❖ to select the desired item, then press EXECUTE. (3) Press ❖ or ❖ to set the desired mode, then press EXECUTE. If you want to change the other modes, repeat steps 2 and 3. (4) Press MENU to erase the menu display.

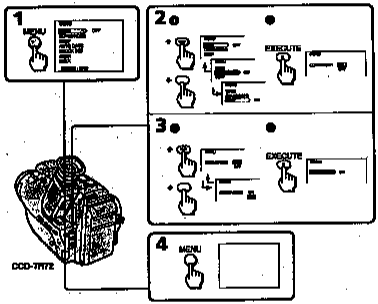

Note on BACK UP
When BACK UP indicator appears on the menu display, the settings of items are retained even when the battery is removed, as long as the lithium battery is in place.

Setting of Each Item

Common Items in CAMERA and PLAYER Modes
COMMANDER <ON/OFF>
- Select ON when using the supplied Remote Commander for the camcorder.
- Select OFF when not using the Remote Commander for the camcorder.

BEEP <ON/OFF>
- Select ON so that beeps sound when you start/stop recording.
- Select OFF when you do not want to hear the beep sound.

See the next page for further information.

Items in CAMERA mode

WIND <ON/OFF>
— For stereo models (CCD-TR72/TR80)
• Select ON to reduce wind noise when recording in strong wind.
• Normally select OFF.

AUTO DATE <ON/OFF>
• Select ON to record the date of recording automatically (AUTO DATE feature p.12).
• Select OFF otherwise.

CLOCK SET
Select this item when you need to reset the clock (p.31).

AREA
Select the area number of the time zone where you will use the camcorder when you use the world clock (p.27).

D.S.T. <ON/OFF>
• Select ON to set the clock to Daylight Saving Time.
• Select OFF to set to standard time.

Items in PLAYER mode

EDIT <ON/OFF>
• Select ON to minimize the picture deterioration when editing.
• Normally select OFF.

HiFi SOUND <STEREO/1/2>
—For stereo models (CCD-TR72/TR80)
• Normally select STEREO.
• Select 1 or 2 to play back a dual soundtrack tape.

Using the World Clock

Reset the clock according to the local time zone by setting AREA and D.S.T. modes in the menu system. First find the area number in the "Time zone chart" on page 28.
(1) Turn STANDBY up. **(2)** Press MENU to display the menu. **(3)** Select AREA item (p.26). Press ↑ or ↓ to select the area number where you will use the camcorder. Press EXECUTE. **(4)** Select D.S.T. item (p.26). Press ↑ or ↓ to select ON: for Daylight Saving Time or OFF: for standard time. Press EXECUTE.

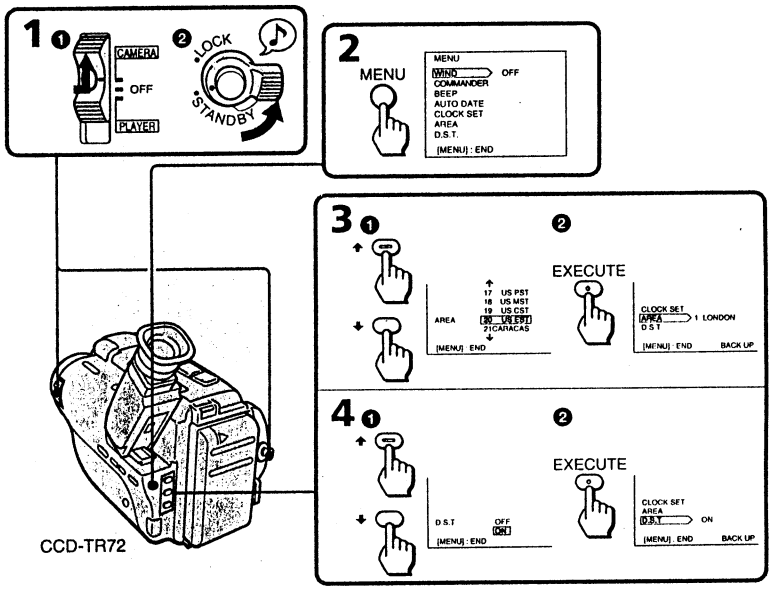

The area name appears in the viewfinder when using the world clock. The ☀ indicator appears in the viewfinder when setting to Daylight Saving Time.

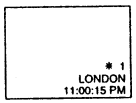

To Check the Date
Press DATE. To turn off the date indicator, press DATE again.

To restore to Your Home Area Time
Reset the AREA mode in the menu system to your home area number.

See the next page for the Time Zone Chart.

Items in CAMERA mode

WIND <ON/OFF>
— For stereo models (CCD-TR72/TR80)
- Select ON to reduce wind noise when recording in strong wind.
- Normally select OFF.

AUTO DATE <ON/OFF>
- Select ON to record the date of recording automatically (AUTO DATE feature p.12).
- Select OFF otherwise.

CLOCK SET
Select this item when you need to reset the clock (p.31).

AREA
Select the area number of the time zone where you will use the camcorder when you use the world clock (p.27).

D.S.T. <ON/OFF>
- Select ON to set the clock to Daylight Saving Time.
- Select OFF to set to standard time.

Items in PLAYER mode

EDIT <ON/OFF>
- Select ON to minimize the picture deterioration when editing.
- Normally select OFF.

HFI SOUND <STEREO/1/2>
— For stereo models (CCD-TR72/TR80)
- Normally select STEREO.
- Select 1 or 2 to play back a dual soundtrack tape.

Using the World Clock

Reset the clock according to the local time zone by setting AREA and D.S.T. modes in the menu system. First find the area number in the "Time zone chart" on page 28.
(1) Turn STANDBY up. (2) Press MENU to display the menu. (3) Select AREA item (p.26). Press + or + to select the area number where you will use the camcorder. Press EXECUTE. (4) Select D.S.T. item (p.26). Press + or + to select ON for Daylight Saving Time or OFF for standard time. Press EXECUTE.

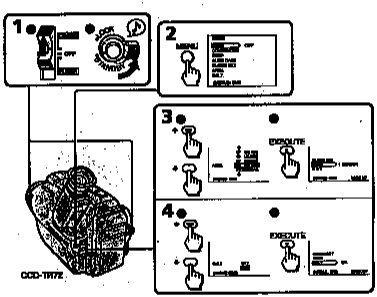

The area name appears in the viewfinder when using the world clock. The ☀ indicator appears in the viewfinder when setting to Daylight Saving Time.

To Check the Date

Press DATE. To turn off the date indicator, press DATE again.

To restore to Your Home Area Time

Reset the AREA mode in the menu system to your home area number.

See the next page for the Time Zone Chart.

Changing the Mode Settings

Time Zone Chart

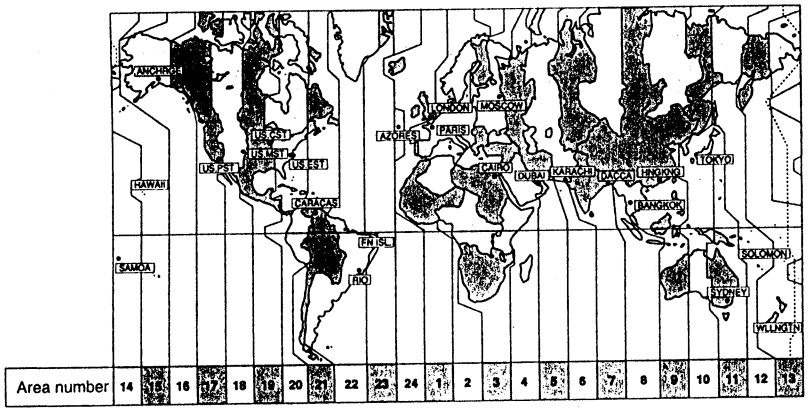

Area number	Area name	Nations or area*
1	LONDON	England, GMT (Greenwich Mean Time), Morocco, Portugal
2	PARIS	Austria, France, Germany, Italy, Netherlands, Spain, Sweden, Switzerland, CET
3	CAIRO	Egypt, Finland, Greece, Israel, Turkey
4	MOSCOW	Ethiopia, Iraq, Kenya, Saudi Arabia, former U.S.S.R. (west)
5	DUBAI	United Arab Emirates
6	KARACHI	Maldives, Pakistan
7	DACCA	Bangladesh, Myanmar
8	BANGKOK	Cambodia, Indonesia (Jakarta), Thailand, Vietnam
9	HNGKNG	Australia (west), China, Hong Kong, Indonesia (Bali, Borneo), Malaysia, Philippines, Singapore, Taiwan
10	TOKYO	Japan, Korea
11	SYDNEY	Australia (east), Guam, Saipan
12	SOLOMON	New Caledonia
13	WLLNGTN	Fiji, New Zealand
14	SAMOA	Western Samoa
15	HAWAII	HST (Hawaii Standard Time), Tahiti
16	ANCHRGE	AST (Alaska Standard Time)
17	US. PST	PST (Pacific Standard Time)
18	US. MST	MST (Mountain Standard Time)
19	US. CST	CST (Central Standard Time), Mexico
20	US. EST	EST (East Standard Time), Peru
21	CARACAS	Chili, Dominica, Venezuela
22	RIO	Argentina, Brazil, Uruguay
23	FN ISL.	Fernando de Noronha
24	AZORES	Azores Islands

* These are common names. They may be different from formal country names.

Editing onto Another Tape

You can create your own video program by editing with any other 8 mm, Hi8 Hi8, VHS VHS, S-VHS S-VHS, VHSC VHSC, S-VHSC S-VHSC, or Betamax VCR that has video/audio inputs.

Before Editing

After connecting the camcorder to the VCR,
(1) Slide the POWER switch to PLAYER. **(2)** Set EDIT mode to ON in the menu system to minimise the picture deterioration (p.25).

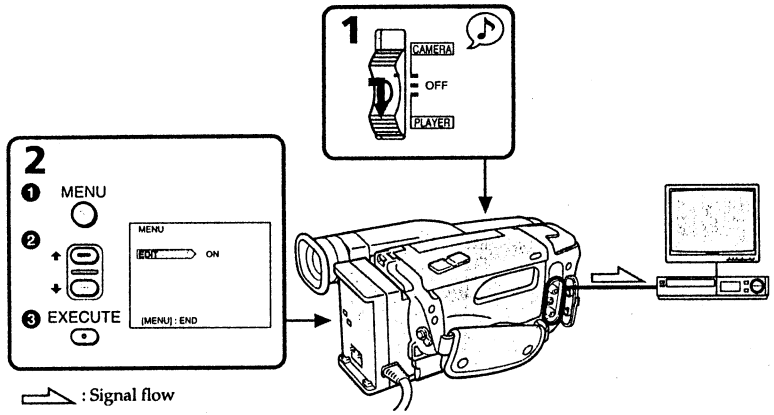

Starting Editing

(1) Insert a blank tape (or a tape you want to record over) into the recording VCR. Then insert your recorded tape into the camcorder. **(2)** Play back the recorded tape on the camcorder until you locate the point where you want to start editing. Then set the camcorder to playback pause mode. **(3)** Set the recording VCR to recording pause mode. **(4)** Press ❚❚ on the camcorder and VCR simultaneously to start editing.

To Edit More Scenes

Repeat steps 2 to 4.

To Stop Editing

Press □ STOP on the camcorder and VCR. When you finish editing, reset EDIT mode to OFF (p.25).

Use of the EDITSEARCH button

To play back a tape in the forward or reverse direction keep pressing EDITSEARCH during playback pause. You can play back still pictures successively at specific intervals by pressing EDITSEARCH intermittently.

Note on DISPLAY function

If you have displayed the viewfinder screen indicators on the TV (DISPLAY function), erase the indicators by pressing DISPLAY on the Remote Commander so that they will not be superimposed on the edited tape.

Time Zone Chart

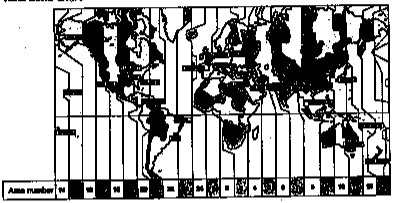

Area number	Area name	Nations or area*
1	LONDON	England, GMT (Greenwich Mean Time), Morocco, Portugal
2	PARIS	Austria, France, Germany, Italy, Netherlands, Spain, Sweden, Switzerland, CET
3	CAIRO	Egypt, Finland, Greece, Israel, Turkey
4	MOSCOW	Ethiopia, Iraq, Kenya, Saudi Arabia, former U.S.S.R. (west)
5	DUBAI	United Arab Emirates
6	KARACHI	Maldives, Pakistan
7	DACCA	Bangladesh, Myanmar
8	BANGKOK	Cambodia, Indonesia (Jakarta), Thailand, Vietnam
9	HONGKONG	Australia (west), China, Hong Kong, Indonesia (Bali, Borneo), Malaysia, Philippines, Singapore, Taiwan
10	TOKYO	Japan, Korea
11	SYDNEY	Australia (east), Guam, Saipan
12	SOLOMON	New Caledonia
13	WELLINGTN	Fiji, New Zealand
14	SAMOA	Western Samoa
15	HAWAII	HST (Hawaii Standard Time), Tahiti
16	ANCHRAGE	AST (Alaska Standard Time)
17	US, PST	PST (Pacific Standard Time)
18	US, MST	MST (Mountain Standard Time)
19	US, CST	CST (Central Standard Time), Mexico
20	US, EST	EST (East Standard Time), Peru
21	CARACAS	Chile, Bolivia, Venezuela
22	RIO	Argentina, Brazil, Uruguay
23	FN BL.	Fernando de Noronha
24	AZORES	Azores Islands

* These are common names. They may be different from formal country names.

Editing onto Another Tape

You can create your own video program by editing with any other 8 mm, Hi8 TM, Hi8 VM, Hi8 S-VM, Hi8 V-HS, Hi8 V-HSC, Hi8 S-VHSC, or 8 format VCR that has video/audio inputs.

Before Editing

After connecting the camcorder to the VCR,
(1) Slide the POWER switch to PLAYER. (2) Set EDIT mode to ON in the menu system to minimize the picture deterioration (p.33).

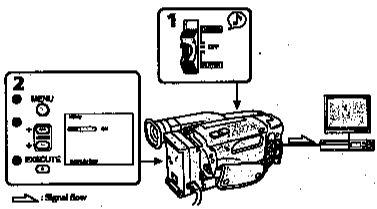

Starting Editing

(1) Insert a blank tape (or a tape you want to record over) into the recording VCR. Then insert your recorded tape into the camcorder. (2) Play back the recorded tape on the camcorder until you locate the point where you want to start editing. Then set the camcorder to playback pause mode. (3) Set the recording VCR to recording pause mode. (4) Press II on the camcorder and VCR simultaneously to start editing.

To Edit More Scenes

Repeat steps 2 to 4.

To Stop Editing

Press □ STOP on the camcorder and VCR. When you finish editing, reset EDIT mode to OFF (p.20).

Use of the REVSEARCH button

To play back a tape in the forward or reverse direction loop pressing REVSEARCH during playback pause. You can play back still pictures successively at specific intervals by pressing REVSEARCH intermittently.

Note on DISPLAY function

If you have displayed the viewfinder screen indications on the TV (DISPLAY function), erase the indicators by pressing DISPLAY on the Remote Commander so that they will not be superimposed on the edited tape.

Additional Information

Changing the Lithium Battery In the Camcorder

Your camcorder is supplied with the lithium battery installed. The lithium battery lasts for about 1 year under normal operation. When the battery becomes weak or dead, indicator flashes in the viewfinder for about 5 seconds when you set the POWER switch to CAMERA. In this case, **replace the battery with the Sony CR2025 or Duracell DL-2025 lithium battery. Use of another battery may present a risk of fire or explosion.**

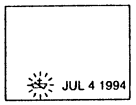

Note on Lithium Battery

Note that the lithium battery has a positive (+) and a negative (–) terminals as illustrated. **Be sure to install the lithium battery so that terminals on the battery match the terminals on the camcorder.**

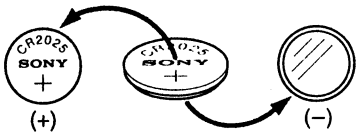

WARNING

The battery may explode if mistreated. Do not recharge, disassemble, or dispose of in fire.

Caution

Keep the lithium battery out of the reach of children. Should the battery be swallowed, consult a doctor immediately.

Changing the Lithium Battery

When replacing the lithium battery, keep the battery pack or other power source attached. Otherwise, you will need to reset the date, time and the other items with BACK UP indicator in the menu system. **(1)** Open the lid of the lithium battery compartment. **(2)** Push the battery down once and pull it out from the holder. **(3)** Install the lithium battery with the positive (+) side facing out. Close the lid of the battery compartment.

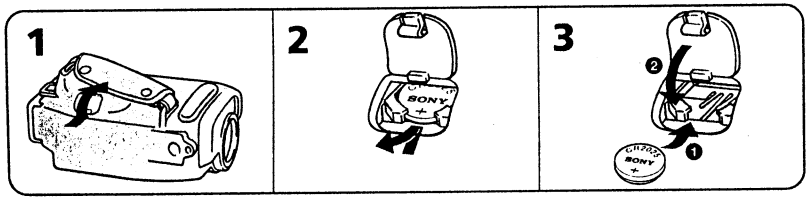

Resetting the Date and Time

Reset the date and time in the menu system.
(1) Press MENU to display the menu. **(2)** Press ↑ or ↓ to select CLOCK SET item (p.26). Press EXECUTE. **(3)** Press ↑ or ↓ to select the area number where you will use the camcorder. Press EXECUTE. **(4)** Select D.S.T. ON for Daylight Saving Time or OFF for standard time. Press EXECUTE. **(5)** Set year, month, day, time, minute by pressing ↑, ↓ and EXECUTE. Note that when you keep ↑ and ↓ pressed, the digits advance faster. **(6)** Press MENU to erase the menu display.

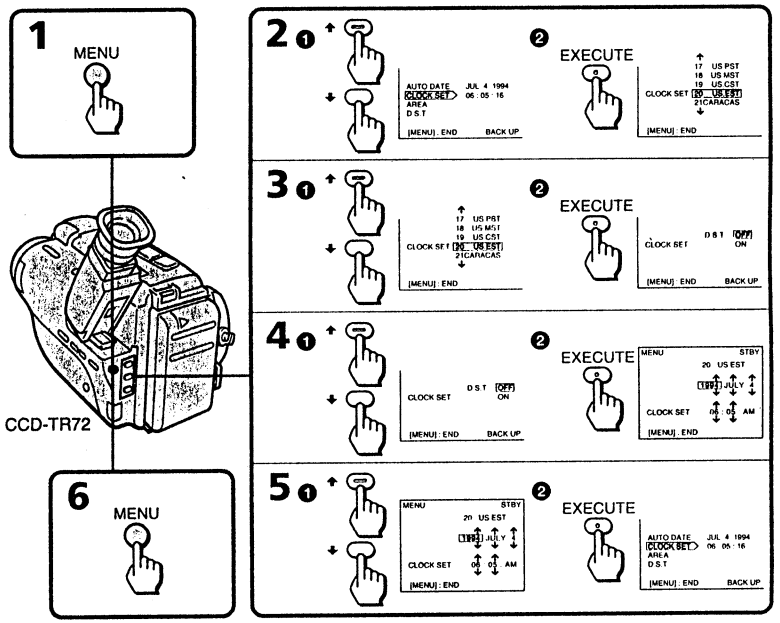

Time Zones and Area Numbers and Names

"S.T". in the following table stands for Standard Time.

Time Zones	Area Name	Area Number
Hawaii S.T.	HAWAI	15
Alaska S.T.	ANCHRGE	16
Pacific S.T./West Canada	US.PST	17
Mountain S.T.	US.MST	18
Central S.T.	US.CST	19
Eastern S.T./East Canada	US.EST	20

Additional Information

Changing the Lithium Battery in the Camcorder

Your camcorder is supplied with the lithium battery installed. The lithium battery lasts for about 1 year under normal operation. When the battery becomes weak or dead, its indicator flashes in the viewfinder for about 5 seconds when you set the POWER switch to CAMERA. In this case, replace the battery with the Sony CR2025 or Duracell DL-2025 lithium battery. Use of another battery may present a risk of fire or explosion.

Note on Lithium Battery

Note that the lithium battery has a positive (+) and a negative (–) terminals as illustrated. Be sure to install the lithium battery so that terminals on the battery match the terminals on the camcorder.

WARNING

The battery may explode if mistreated. Do not recharge, disassemble, or dispose of in fire.

Caution

Keep the lithium battery out of the reach of children. Should the battery be swallowed, consult a doctor immediately.

Preparing the Lithium Battery

When replacing the lithium battery, keep the battery pack or other power source attached. Otherwise, you will need to reset the date, time and the other items with BACK UP indicator in the menu system.
(1) Open the lid of the lithium battery compartment. (2) Push the battery down once and pull it out from the holder. (3) Install the lithium battery with the positive (+) side facing out. Close the lid of the battery compartment.

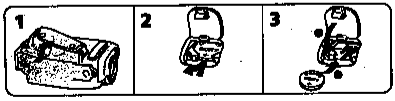

Resetting the Date and Time

Reset the date and time in the menu system.
(1) Press MENU to display the menu. (2) Press ❖ or ❖ to select CLOCK SET item (p.26). Press EXECUTE. (3) Press ❖ or ❖ to select the area number where you will use the camcorder. Press EXECUTE. (4) Select DST: ON for Daylight Saving Time or OFF for standard time. Press EXECUTE. (5) Set year, month, day, time, minute by pressing ❖, ❖ and EXECUTE. Note that when you keep ❖ and ❖ pressed, the digits advance faster. (6) Press MENU to erase the menu display.

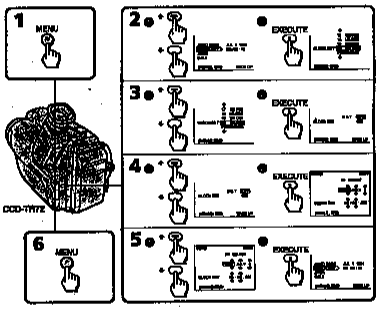

Time Zones and Area Numbers and Names
"S.T". in the following table stands for Standard Time.

Time Zones	Area Name	Area Number
Hawaii S.T.	HAWAI	15
Alaska S.T.	ANCHRGE	16
Pacific S.T./West Canada	USPST	17
Mountain S.T.	USMST	18
Central S.T.	USCST	19
Eastern S.T./East Canada	USEST	20

Resetting the Date and Time

To Correct the Date and Time Setting
Repeat steps 2 to 5.

To Check the Date and Time
Press DATE to display the date indicator in the viewfinder. Press TIME to display the time indicator. When you press the same button again, the indicator goes out.

To Reset to Standard Time
Change D.S.T. mode setting in the menu system (p.25).

The year indicator changes as follows:
1994 ↔ 1995 ←----→ 2024

Note on the time indicator
The internal clock of the camcorder operates on a 12-hour cycle. 12:00:00 AM stands for midnight. 12:00:00 PM stands for noon.

Playback Modes

The playback mode is selected automatically according to the recording system (SP/LP mode) in which the tape was recorded.

Notes on AFM Hi-Fi stereo — For stereo models (CCD-TR72/TR80)
When you play back the tape, the sound is in monaural if:
- You record the tape using this camcorder, then play it back on an AFM Hi-Fi monaural video recorder/player.
- You record the tape on an AFM Hi-Fi monaural video recorder, then play it back on this camcorder.

LP (long play) mode
When you play back a tape recorded in LP mode, the LP indicator lights up in the viewfinder. This camcorder cannot record tape in LP mode.

Foreign 8 mm video
You cannot play software recorded on a different TV color system. Because the TV color systems differ from country to country, you may not be able to play back foreign pre-recorded software. Refer to page 39 to check the TV color system of foreign countries.

Tips for Using the Battery Pack

This section shows you how you can get the most out of your battery pack.

Preparing the Battery Pack

Always Carry Additional Batteries
Have sufficient battery pack power to do 2 to 3 times as much recording as you have planned.

Battery Life is Shorter in Cold Environment
Battery efficiency is decreased and the battery will be used up more quickly if you are recording in cold environment.

To Save Battery Power
Turn the STANDBY switch on the camcorder down when not recording to save battery power. **[a]**
A smooth transition between scenes can be made even if recording is stopped and started again. While positioning the subject, selecting an angle, or looking through the viewfinder lens, the lens moves automatically and the battery is used. The battery is also used when a tape is inserted or removed.

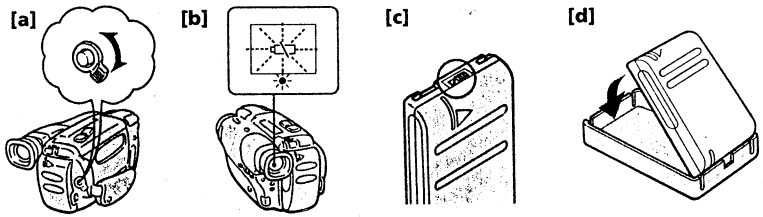

Resetting the Date and Time

To Correct the Date and Time Setting
Repeat steps 2 to 5.

To Check the Date and Time
Press DATE to display the date indicator in the viewfinder. Press TIME to display the time indicator. When you press the same button again, the indicator goes out.

To Reset to Standard Time
Change D.S.T. mode setting in the menu system (p.25).

The year indicator changes as follows:
1994 → 1995 → 2024

Note on the time indicator
The internal clock of the camcorder operates on a 12-hour cycle.
12:00:00 AM stands for midnight. 12:00:00 PM stands for noon.

Playback Modes

The playback mode is selected automatically according to the recording system (SP/LP mode) in which the tape was recorded.

Notes on AFM Hi-Fi stereo — For stereo models (CCD-TR72/TR80)
When you play back the tape, the sound is in monaural if:
- You record the tape using this camcorder, then play it back on an AFM Hi-Fi monaural video recorder/player.
- You record the tape on an AFM Hi-Fi monaural video recorder, then play it back on this camcorder.

LP (long play) mode
When you play back a tape recorded in LP mode, the LP indicator lights up in the viewfinder. This camcorder cannot record tape in LP mode.

Foreign & rare video
You cannot play software recorded on a different TV color system. Because the TV color systems differ from country to country, you may not be able to play back foreign pre-recorded software. Refer to page 59 to check the TV color system of foreign countries.

Tips for Using the Battery Pack

This section shows you how you can get the most out of your battery pack.

Preparing the Battery Pack

Always Carry Additional Batteries
Have sufficient battery pack power in do 2 in 3 times as much recording as you have planned.

Battery Life is Shorter in Cold Environment
Battery efficiency is decreased and the battery will be used up more quickly if you are recording in cold environment.

To Save Battery Power
Turn the STANDBY switch on the camcorder down when not recording to save battery power. [a]
A smooth transition between scenes can be made even if recording is stopped and started again. While positioning the subject, selecting an angle, or looking through the viewfinder lens, the lens moves automatically and the battery is used. The battery is also used when a tape is inserted or removed.

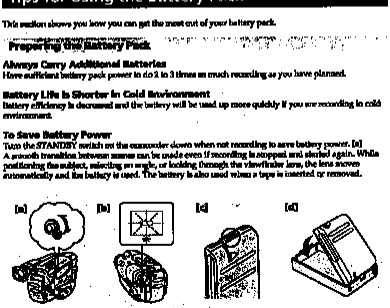

Tips for Using the Battery Pack

When to Replace the Battery Pack

While you are using your camcorder, the remaining battery indicator decreases gradually as battery power is used up.

When the remaining battery indicator reaches the lowest point, the i indicator appears and starts flashing in the viewfinder. **[b]** on page 33.
When the indicator in the viewfinder changes from slow flashing to rapid flashing while you are recording, slide the POWER switch to OFF on the camcorder and replace the battery pack. Leave the tape in the camcorder to obtain smooth transition between scenes after the battery pack is replaced.

Note on the remaining battery indicator

The remaining battery indicator of the camcorder may indicate a different remaining capacity from that of the battery pack with the remaining battery indicator (not supplied). The indicator of the battery pack is more accurate.

Notes on the Rechargeable Battery Pack

The Battery Heats Up

During charging or recording, the battery pack heats up. This is caused by energy that has been generated and a chemical change that has occurred inside the battery pack. This is not cause for concern.

Battery Care

- Remove the battery pack from the camcorder after using the battery pack, and keep it in a cool place. When the battery pack is attached to the camcorder, a small amount of current flows to the camcorder even if the POWER switch is set to OFF, which shortens battery life.
- The battery pack is always discharging even when it is not in use after charging. Therefore, you should charge the battery right before using the camcorder.

How to Use the Switch on the Battery Pack

This switch is provided so that you can mark the charged battery. Set the switch to the "no mark" position when charging is completed. Set the switch to the "red mark" position when the battery is used up (or in whichever direction you want to remind yourself). **[c]** on page 33.

The Life of the Battery Pack

The battery pack can be fully charged and discharged about 500 times under normal temperatures. If the indicator flashes rapidly just after turning on the camcordrer with a fully charged battery pack, the battery pack should be replaced with a new fully charged one.

Charging Temperature

You should charge batteries at temperatures from 50°F to 86°F (from 10°C to 30°C). Lower temperatures require a longer charging time.

Notes on Charging

A Brand-new Battery

A brand-new battery pack is not charged. Before using the battery pack, charge it completely.

Before Recharging a Used Battery Pack

- Make sure to use up the battery before recharging.
- If recording is completed before the indicator appears in the viewfinder, you should remove the tape, slide the POWER switch to CAMERA, turn STANDBY up, and leave the camcorder until the battery indicator flashes rapidly.
- When you use the AC-S10 power adaptor, you can use the discharging function.
- **Charging the usable battery causes a lowering of battery capacity. Battery capacity can be recovered if you fully discharge and charge the battery again.**

After Long Storage

Recharge the battery pack after a long period of storage. If the battery pack is charged fully but not used for a long time (about 1 year), it becomes discharged. Charge it again, but in this case the battery life will be shorter than normal. After several charging and discharging cycles, the battery life will recover its original capacity.

Notes on the Terminals

If the terminals (metal parts on the back) are not clean, the battery duration will be shortened.
When the terminals are not clean or when the battery pack has not been used for a long time, repeat installing and removing the battery pack. This improves the contact condition. Also, wipe the + and – terminals with a soft cloth or paper.

Be Sure to Observe the Following

- **To prevent an accident caused by a short circuit, do not allow metal objects such as a necklace to touch the battery terminals. Carry the battery pack attaching to the terminal cover. [d] on page 33.**
- Keep the battery pack away from fire.
- Keep the battery pack dry.
- Do not open nor convert the battery pack.
- Do not expose the battery pack to any mechanical shock.

When to Replace the Battery Pack

While you are using your camcorder, the remaining battery indicator decreases gradually as battery power is used up.

When the remaining battery indicator reaches the lowest point, the indicator appears and starts flashing in the viewfinder. (☞ on page 33.
When the ☞ indicator in the viewfinder changes from slow flashing to rapid flashing while you are recording, slide the POWER switch to OFF on the camcorder and replace the battery pack. Leave the tape in the camcorder to obtain smooth transition between scenes after the battery pack is replaced.

Note on the remaining battery indicator
The remaining battery indicator of the camcorder may indicate a different remaining capacity from that of the battery pack with the remaining battery indicator (not supplied). The indicator of the battery pack is more accurate.

Tips for Using the Rechargeable Battery Pack

The Battery Heats Up

During charging or recording, the battery pack heats up. This is caused by energy that has been generated and a chemical change that has occurred inside the battery pack. This is not cause for concern.

Battery Care

- Remove the battery pack from the camcorder after using the battery pack, and keep it in a cool place. When the battery pack is attached to the camcorder, a small amount of current flows to the camcorder even if the POWER switch is set to OFF, which shortens battery life.
- The battery pack is always discharging even when it is not in use after charging. Therefore, you should charge the battery right before using the camcorder.

How to Use the Switch on the Battery Pack

This switch is provided so that you can mark the charged battery. Set the switch to the "no mark" position when charging is completed. Set the switch to the "red mark" position when the battery is used up (or in whichever direction you want to mark your tape). (☞ on page 33.

The Life of the Battery Pack

The battery pack can be fully charged and discharged about 500 times under normal temperatures. If the ☞ indicator flashes rapidly just after turning on the camcorder with a fully charged battery pack, the battery pack should be replaced with a new fully charged one.

Charging Temperature

You should charge batteries at temperatures from 50°F to 86°F (from 10°C to 30°C). Lower temperatures require a longer charging time.

Tips for Using the Battery Pack

A Brand-new Battery

A brand-new battery pack is not charged. Before using the battery pack, charge it completely.

Before Recharging a Used Battery Pack

- Make sure to use up the battery before recharging.
- If recording is completed before the ☞ indicator appears in the viewfinder, you should remove the tape, slide the POWER switch to CAMERA, turn STANDBY up, and leave the camcorder until the battery indicator flashes rapidly.
- When you use the AC-610 power adapter, you can use the discharging function.
- Charging the stable battery causes a lowering of battery capacity. Battery capacity can be recovered if you fully discharge and charge the battery again.

After Long Storage

Recharge the battery pack after a long period of storage. If the battery pack is charged fully but not used for a long time (about 1 year), it becomes discharged. Charge it again, but in this case the battery life will be shorter than normal. After several charging and discharging cycles, the battery life will recover its original capacity.

Notes on the Terminal Parts

If the terminals (metal parts on the back) are not clean, the battery duration will be shortened. When the terminals are not clean or when the battery pack has not been used for a long time, repeat installing and removing the battery pack. This improves the contact condition. Also, wipe the + and – terminals with a soft cloth or paper.

Be Sure to Observe the Following

- To prevent an accident caused by a short circuit, do not allow metal objects such as a necklace to touch the battery terminals. Carry the battery pack attaching to the terminal cover. (☞ on page 33.
- Keep the battery pack away from fire.
- Keep the battery pack dry.
- Do not open nor convert the battery pack.
- Do not expose the battery pack to any mechanical shock.

Maintenance Information and Precautions

Moisture Condensation

If the camcorder is brought directly from a cold place to a warm place, moisture may condense inside the camcorder, on the surface of the tape, or on the lens. If this happens, the tape may stick to the head drum and be damaged or the camcorder may not operate correctly. To prevent possible damage under these circumstances, the camcorder is furnished with moisture sensors. However, take the following precautions.

Inside the Camcorder

When ⊡ and ⏏ indicators flash in the viewfinder, moisture has condensed inside the camcorder. If this happens, none of the functions except cassette ejection will work.
Eject the cassette turn off the camcorder, and leave it with the cassette compartment open for about 1 hour.
If the ⊡ indicator does not light up when you turn on the power, you can use the camcorder again.

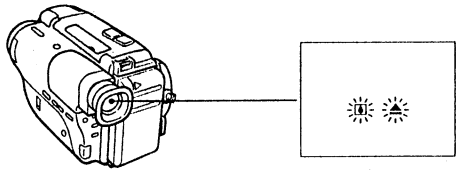

On the Surface of the Tape

If there is moisture on the surface of the tape, when you insert cassette and press a tape transport button (▶ PLAY, etc.), the ⏏ indicator flashes in the viewfinder. If this happens, none of the functions except cassette ejection will work.
Eject the cassette and leave it for about 1 hour.
If the ⏏ indicator does not light up when you insert the cassette and press a tape transport button, you can use the camcorder again.

On the Lens

No indicator will appear, but the picture becomes dim. Turn off the power and do not use the camcorder for about 1 hour.

How to Prevent Moisture Condensation

When bringing the camcorder from a cold place to a warm place, put the camcorder in a plastic bag and allow it to adapt to room conditions over a period of time.
(1) Be sure to tightly seal the plastic bag containing the camcorder.
(2) Remove the bag when the air temperature inside it has reached the temperature surrounding it (after about one hour).

Video Head Cleaning

To ensure clear pictures, clean the video heads periodically. When playback pictures are "noisy" or hardly visible, the video heads may be contaminated.

[a] ⟶ [b]

[a] Slight contamination
[b] Critical contamination
If this happens, clean the video heads with the Sony V8-25CLH cleaning cassette (not supplied). After checking the picture, if it is still "noisy", repeat the cleaning. (Do not repeat cleaning more than 5 times.)

Caution
Do not use a commercially available wet-type cleaning cassette. It may damage the video heads.

Note
If the V8-25CLH cleaning cassette is not available in your area, consult your nearest Sony dealer.

Removing Dust from inside the Viewfinder

(1) While sliding the viewfinder release knob to the left, flip open the viewfinder. **(2)** Clean the surface with a commercially available blower.

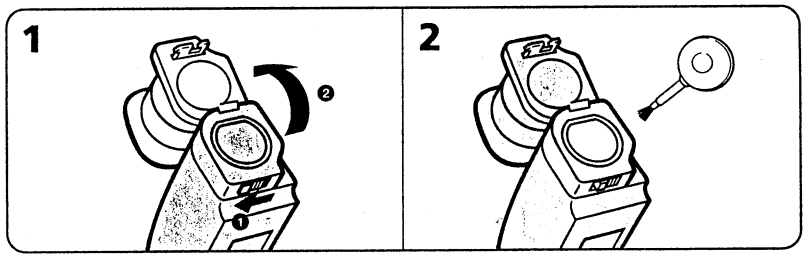

Moisture Condensation

If the camcorder is brought directly from a cold place to a warm place, moisture may condense inside the camcorder, on the surface of the tape, or on the lens. If this happens, the tape may stick to the head drum and be damaged or the camcorder may not operate correctly. To prevent possible damage under these circumstances, the camcorder is furnished with moisture sensors. However, take the following precautions.

Inside the Camcorder

When 💧 and ⚠ indicators flash in the viewfinder, moisture has condensed inside the camcorder. If this happens, none of the functions except ejection will work.
Eject the cassette tape, turn off the camcorder, and leave it with the cassette compartment open for about 1 hour.
If the 💧 indicator does not light up when you turn on the power, you can use the camcorder again.

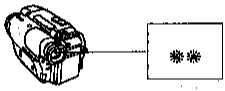

On the Surface of the Tape

If there is moisture on the surface of the tape, when you insert cassette and press a tape transport button (▶ PLAY, etc), the ⚠ indicator flashes in the viewfinder. If this happens, none of the functions except cassette ejection will work.
Eject the cassette and leave it for about 1 hour.
If the ⚠ indicator does not light up when you insert the cassette and press a tape transport button, you can use the camcorder again.

On the Lens

No indicator will appear, but the picture becomes dim. Turn off the power and do not use the camcorder for about 1 hour.

How to Prevent Moisture Condensation

When bringing the camcorder from a cold place to a warm place, put the camcorder in a plastic bag and allow it to adapt to room conditions over a period of time.
(1) Be sure to tightly seal the plastic bag containing the camcorder.
(2) Remove the bag when the air temperature inside it has reached the temperature surrounding it (after about one hour).

Video Head Cleaning

To ensure clear pictures, clean the video heads periodically. When playback pictures are "noisy" or hardly visible, the video heads may be contaminated.

[a] Slight contamination
[b] Critical contamination
If this happens, clean the video heads with the Sony V8-25CLH cleaning cassette (not supplied). After cleaning the picture, if it is still "noisy", repeat the cleaning. (Do not repeat cleaning more than 5 times.)

Caution
Do not use a commercially available wet-type cleaning cassette. It may damage the video heads.

Note
If the V8-25CLH cleaning cassette is not available in your area, consult your nearest Sony dealer.

Removing Dust from Inside the Viewfinder

(1) While sliding the viewfinder release knob to the left, flip open the viewfinder. (2) Clean the surface with a commercially available blower.

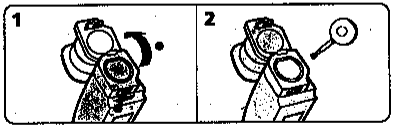

Maintenance Information and Precautions

Precautions

Camcorder Operation

- Operate the camcorder using 6.0 V (battery pack), or 7.5 V (AC power adaptor).
- For DC or AC operation, use only the accessories recommended in this manual.
- Should any solid object or liquid fall into the casing, unplug the camcorder and have it checked by your nearest Sony dealer before operating it any further.
- Avoid rough handling or mechanical shock. Be particularly careful of the lens.
- Keep the POWER switch set to OFF when not using the camera.
- Do not wrap up the camcorder and operate it since heat may build up internally.
- Keep the camcorder away from strong magnetic fields or mechanical vibration.

On Handling Tapes

Do not insert anything into the small holes on the rear of the cassette. These holes are used to sense the type, thickness of tape, or if the tab is out or in.

Camcorder Care

- When the camcorder is not to be used for a long time, disconnect the power source and remove the tape. Periodically turn on the power, operate the camera and player sections and play back a tape for about 3 minutes.
- Clean the lens with a soft brush to remove dust. If there are fingerprints on the lens, remove them with a soft cloth.
- Clean the camcorder body with a soft dry cloth, or a soft cloth lightly moistened with a mild detergent solution. Do not use any type of solvent which may damage the finish.

AC Power Adaptor

Charging

- Use only for the specified battery pack. This unit cannot be used to charge an NP-500 series battery pack.
- Attach the battery pack firmly.
- Charge the battery pack on a flat surface without vibration.

Others

- The model for USA or Canada: One blade of the plug is wider than the other for the purpose of safety and will fit into the power outlet only one way. If you are unable to insert the plug fully into the outlet, contact your dealer.
- Unplug the unit from the wall (mains) outlet when not in use for a long time. To disconnect the cord (mains lead), pull it out by the plug. Never pull the cord itself.
- Do not operate the unit with a damaged cord or if the unit has been dropped or damaged.
- Do not bend the AC power cord forcibly, or put a heavy object on it. This will damage the cord and may cause a fire or an electrical shock.
- Be sure that nothing metallic comes into contact with the metal parts of the connecting plate. If this happens, a short may occur and the unit may be damaged.
- Always keep the metal contacts clean.
- Do not disassemble the unit.
- Do not apply mechanical shock or drop the unit.
- While the unit is in use, particularly during charging, keep it away from AM receivers and video equipment because it will disturb AM reception and video operation.
- The unit becomes warm while in use. This is normal.
- Do not place the unit in locations that are:
  - Extremely hot or cold
  - Dusty or dirty
  - Very humid
  - Vibrating

If any difficulty should arise, unplug the unit and contact your nearest Sony dealer.

Identifying the Parts

The illustrations in this section are of CCD-TR82.

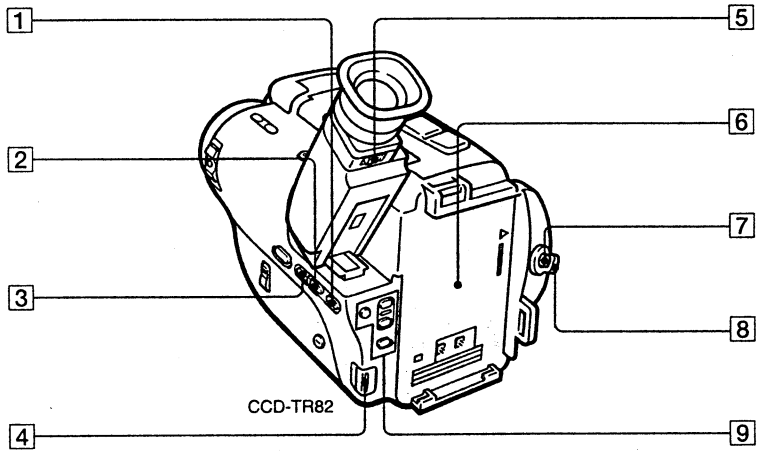

1 **COUNTER RESET button** (p.12)

2 **TIME button** (p.20)

3 **DATE button** (p.20)

4 **BATT (battery) release knob** (p.8)

5 **Viewfinder release knob** (p.14, 37)

6 **Battery mounting surface** (p.8)

7 **START/STOP button** (p.11)

8 **STANDBY switch** (p.10, 11)

9 **Menu operation buttons** (p.25, 31)

Maintenance Information and Precautions

Precautions

Camcorder Operation

- Operate the camcorder using 6.0 V (battery pack), or 7.5 V (AC power adaptor).
- For DC or AC operation, use only the accessories recommended in this manual.
- Should any solid object or liquid fall into the casing, unplug the camcorder and have it checked by your nearest Sony dealer before operating it any further.
- Avoid rough handling or mechanical shock. Be particularly careful of the lens.
- Keep the POWER switch set to OFF when not using the camera.
- Do not wrap up the camcorder and operate it since heat may build up internally.
- Keep the camcorder away from strong magnetic fields or mechanical vibration.

On Handling Tapes

Do not insert anything into the small holes on the rear of the cassette. These holes are used to sense the type, thickness of tape, or if the tab is out or in.

Camcorder Care

- When the camcorder is not to be used for a long time, disconnect the power source and remove the tape. Period-ically turn on the power, operate the camera and player sections and play back a tape for about 3 minutes.
- Clean the lens with a soft brush to remove dust. If there are fingerprints on the lens, remove them with a soft cloth.
- Clean the camcorder body with a soft dry cloth, or a soft cloth lightly moistened with a mild detergent solution. Do not use any type of solvent which may damage the finish.

AC Power Adaptor

Charging

- Use only for the specified battery pack. This unit cannot be used to charge an NP-500 series battery pack.
- Attach the battery pack firmly.
- Charge the battery pack on a flat surface without vibration.

Others

- The model for USA or Canada: One blade of the plug is wider than the other for the purpose of safety and will fit into the power outlet only one way. If you are unable to insert the plug fully into the outlet, contact your dealer.
- Unplug the unit from the wall (mains) outlet when not in use for a long time. To disconnect the cord (mains lead), pull it out by the plug. Never pull the cord itself.
- Do not operate the unit with a damaged cord or if the unit has been dropped or damaged.
- Do not bend the AC power cord forcibly, or put a heavy object on it. This will damage the cord and may cause a fire or an electrical shock.
- Be sure that nothing metallic comes into contact with the metal parts of the connecting plate. If this happens, a short may occur and the unit may be damaged.
- Always keep the metal contacts clean.
- Do not disassemble the unit.
- Do not apply mechanical shock or drop the unit.
- While the unit is in use, particularly during charging, keep it away from AM receivers and video equipment because it will disturb AM reception and video operation.
- The unit becomes warm while in use. This is normal.
- Do not place the unit in locations that are:
  - Extremely hot or cold
  - Dusty or dirty
  - Very humid
  - Vibrating

If any difficulty should arise, unplug the unit and contact your nearest Sony dealer.

Identifying the Parts

The illustrations in this section are of CCD-TR82.

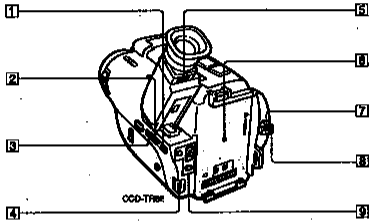

1 COUNTER RESET button (p.12)

2 TIME button (p.20)

3 DATE button (p.20)

4 BATT (battery) release knob (p.8)

5 Viewfinder release knob (p.14, 37)

6 Battery mounting surface (p.8)

7 START/STOP button (p.12)

8 STANDBY switch (p.10, 11)

9 Menu operation buttons (p.28, 31)

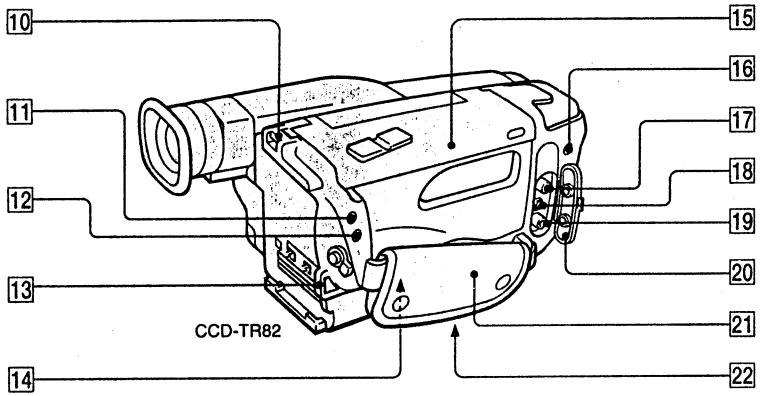

10 **Hook for shoulder strap** (below)

11 **LANC control jack**
Connect the LANC connecting cable to a wired remote control unit such as an editing controller. In this case, set the COMMANDER mode to OFF in the menu system (p.25).
stands for Local Application Control Bus sytem. The control jack is used for controlling the tape transport of video equipment and peripherals connected to it. This jack has the same function as the connectors indicated as CONTROL L or REMOTE.

12 **(earphone) jack (CCD-TR42/TR70/TR82)** (p.15)
(headphones) jack (CCD-TR72/TR80) (p.15)

13 **Hook for shoulder strap** (below)

14 **Lithium battery compartment** (p.30)

15 **Cassette compartment lid** (p.9)

16 **MIC (microphone) jack**

17 **VIDEO jack** (p.16)

18 **RFU DC OUT (RFU adaptor DC out) jack** (p.16)

19 **AUDIO jack** (p.16)

20 **Jack cover**

21 **Grip strap** (p.14)

22 **Tripod receptacle** (p.14)
Attach a tripod (not supplied) here.
When attaching a non-Sony tripod, make sure that the length of the camera mounting screw is shorter than 9/32 inches (6.5 mm).
Otherwise, the screw might damage the inner part of the camcorder.

Attaching the shoulder strap
Attach the supplied shoulder strap to the hooks for the shoulder strap (10, 13).

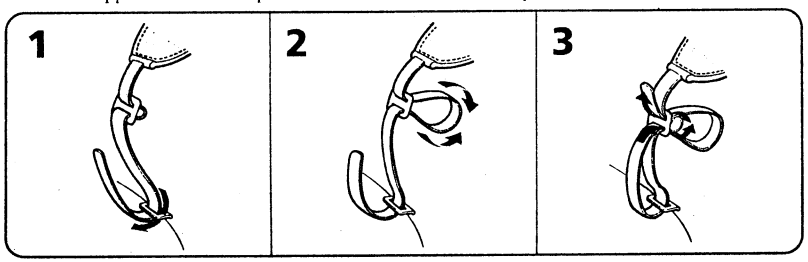

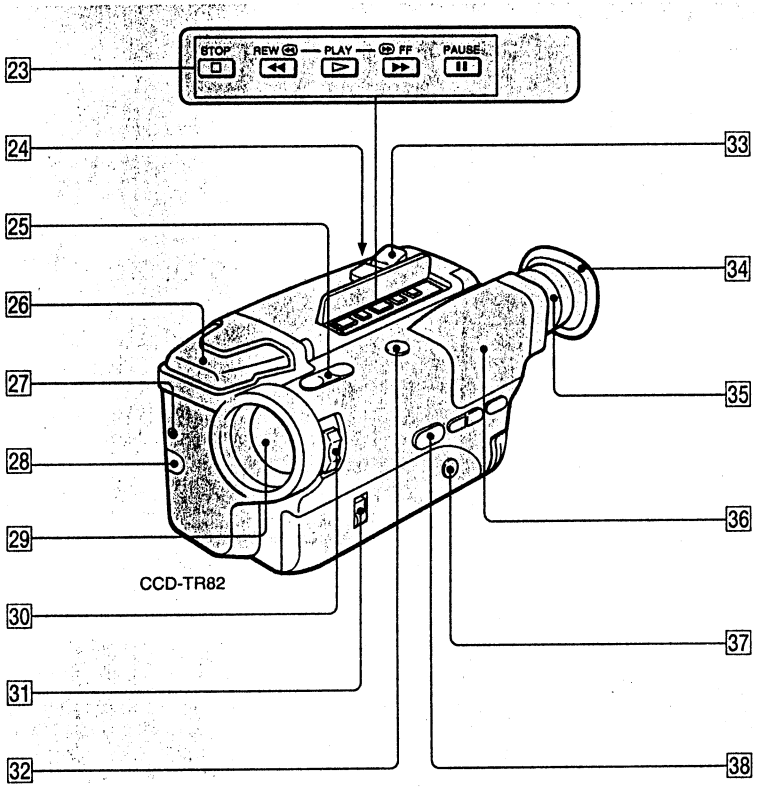

23 **Tape transport buttons** (p.17)
■ STOP
◁◁ REW (rewind)
▷ PLAY (playback)
▷▷ FF (fast forward)
❚❚ PAUSE
These buttons will function in PLAYER mode.

24 **EJECT button** (p.9)

25 **EDITSEARCH button** (p.15)

26 **Built-in microphone**

27 **Camera recording/battery lamp**

28 **Remote sensor** (p.49)

29 **Lens cover**

30 **POWER switch** (p.10, 11)

31 **STEADY SHOT switch** (p.24)

32 **FADER button** (p.23)

33 **POWER ZOOM button** (p.13)

34 **Eyecup** (p.14)

35 **Viewfinder adjustment ring** (p.10)

36 **Viewfinder** (p.10, 14)

37 **BACK LIGHT button** (p.21)

38 **PROGRAM AE button** (p.22)

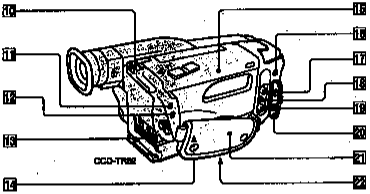

10 Hook for shoulder strap (below)

11 LANC 12 control jack
Connect the LANC 12 connecting cable to a wired remote control unit such as an editing controller. In this case, set the COMMANDER mode to OFF in the menu system (p.20).
12 stands for Local Application Control Bus system. The 12 control jack is used for controlling the tape transport of video equipment and peripherals connected to it. This jack has the same function as the connector indicated as CONTROL L or REMOTE.

12 🎧 (earphone) jack (CCD-TR82/TR77/TR83) (p.15)
🎧 (headphone) jack (CCD-TR72/TR88) (p.15)

13 Hook for shoulder strap (below)

14 Lithium battery compartment (p.30)

15 Cassette compartment lid (p.9)

16 MIC (microphone) jack

17 VIDEO jack (p.16)

18 RFU DC OUT (RFU adaptor DC out) jack (p.16)

19 AUDIO jack (p.16)

20 Jack cover

21 Grip strap (p.14)

22 Tripod receptacle (p.14)
Attach a tripod (not supplied) here.
When attaching a non-Sony tripod, make sure that the length of the camera mounting screw is shorter than 9/32 inches (5.5 mm). Otherwise, the screw might damage the lower part of the camcorder.

Attaching the shoulder strap
Attach the supplied shoulder strap to the hooks for the shoulder strap (10, 13).

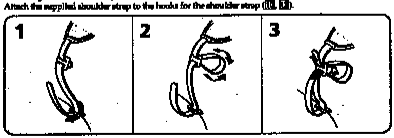

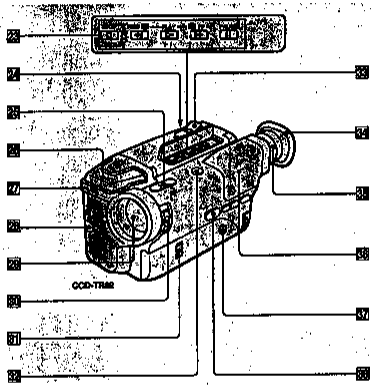

23 Tape transport buttons (p.17)
■ STOP
◁◁ REW (rewind)
▷ PLAY (playback)
▷▷ FF (fast forward)
II PAUSE
These buttons will function in PLAYER mode.

24 EJECT button (p.9)

25 EDITSEARCH button (p.18)

26 Built-in microphone

27 Camera recording/battery lamp

28 Remote sensor (p.49)

29 Lens cover

30 POWER switch (p.10, 11)

31 STEADY SHOT switch (p.24)

32 FADER button (p.23)

33 POWER ZOOM button (p.13)

34 Eyecup (p.14)

35 Viewfinder adjustment ring (p.10)

36 Viewfinder (p.34, 16)

37 BACK LIGHT button (p.21)

38 PROGRAM AE button (p.22)

Remote Commander

The buttons that have the same name on the Remote Commander and on the camcorder function identically.

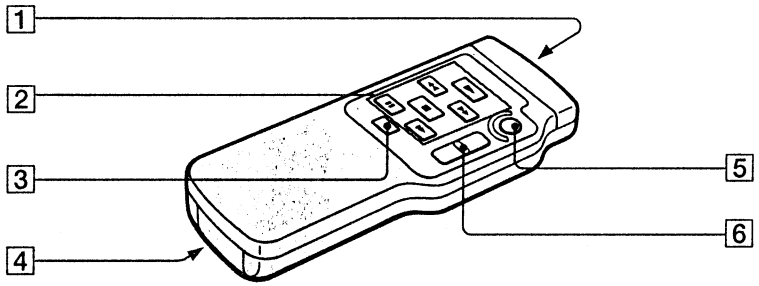

1 **Transmitter** (p.49)
Point toward the remote sensor to control the camcorder after turning on the POWER switch on the camcorder.

2 **Tape transport buttons** (p.17)

3 **DISPLAY button** (p.18)

4 **Size AA (R6) battery holder**

5 **START/STOP button**

6 **Power zoom button**
The zooming speed is unchangeable on the Remote Commander.

Preparing the Remote Commander

To use the Remote Commander, you must insert two size AA (R6) batteries. Use the supplied size AA (R6) batteries.
(1) Remove the battery cover from the Remote Commander. **(2)** Insert both of the size AA (R6) batteries with correct polarity. **(3)** Put the battery cover back onto the Remote Commander.

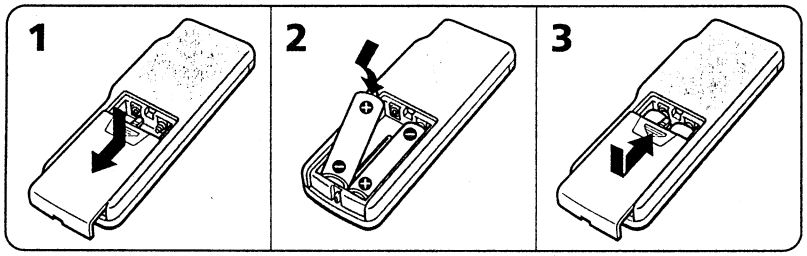

Note on battery life
The batteries for the Remote Commander last about 6 months under normal operation. When the batteries become weak or daed, the Remote Commander does not work.

To avoid damage from possible battery leakage
Remove the batteries when you will not use the Remote Commander for a long time.

Using the Remote Commander

Make sure that the COMMANDER mode is set to ON in the menu system (p.25).

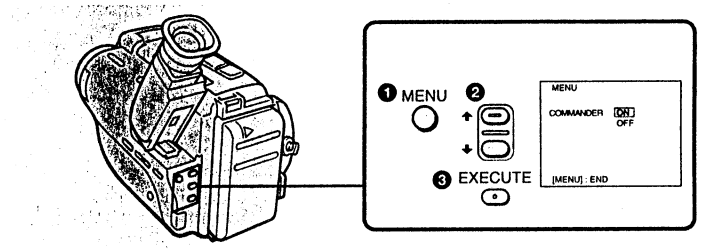

Remote Control Direction

Aim the Remote Commander to the remote sensor within the range as shown below.

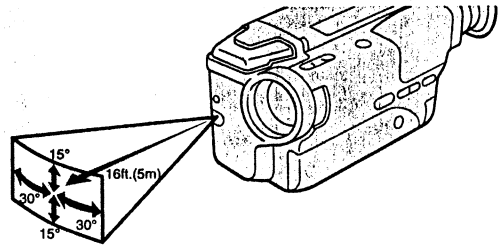

Notes on the Remote Commander

- Keep the remote sensor away from strong light sources such as direct sunlight or illumination. Otherwise, the remote control may not be effective.
- Be sure that there is no obstacle between the remote sensor and the Remote Commander.
- This camcorder works at commander mode VTR 2. The commander modes (1, 2, and 3) are used to distinguish this camcorder from other Sony VCRs to avoid remote control misoperation. If you use another Sony VCR at commander mode VTR 2, we recommend you change the commander mode or cover the remote sensor of the VCR with black paper.

Remote Commander

The buttons that have the same name on the Remote Commander and on the camcorder function identically.

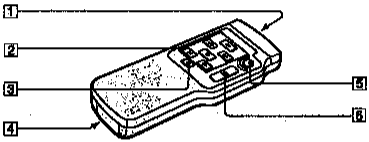

1 Transmitter (p.49)
Point toward the remote sensor to control the camcorder after turning on the POWER switch on the camcorder.

2 Tape transport buttons (p.17)

3 DISPLAY button (p.18)

4 Size AA (R6) battery holder

5 START/STOP button

6 Power zoom button
The zooming speed is unchangeable on the Remote Commander.

Preparing the Remote Commander

To use the Remote Commander, you must insert two size AA (R6) batteries. Use the supplied size AA (R6) batteries.
(1) Remove the battery cover from the Remote Commander. (2) Insert both of the size AA (R6) batteries with correct polarity. (3) Put the battery cover back into the Remote Commander.

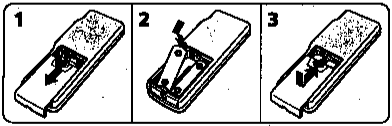

Note on battery life
The batteries for the Remote Commander last about 6 months under normal operation. When the batteries become weak or dead, the Remote Commander does not work.

To avoid damage from possible battery leakage
Remove the batteries when you will not use the Remote Commander for a long time.

Using the Remote Commander

Make sure that the COMMANDER mode is set to ON in the menu system (p.28).

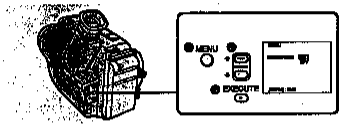

Remote Control Direction

Aim the Remote Commander to the remote sensor within the range as shown below.

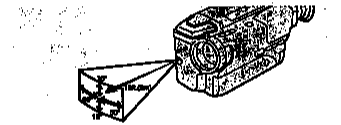

Notes on the Remote Commander

- Keep the remote sensor away from strong light sources such as direct sunlight or illumination. Otherwise, the remote control may not be effective.
- Be sure that there is no obstacle between the remote sensor and the Remote Commander.
- This camcorder works at commander mode VTR 2. The camcorder modes (1, 2, and 3) are used to distinguish this camcorder from other Sony VCRs to avoid remote control misoperation. If you use another Sony VCR at commander mode VTR 2, we recommend you change the camcorder mode or cover the remote sensor of the VCR with black paper.

2-14. CIRCUIT BOARDS LOCATION

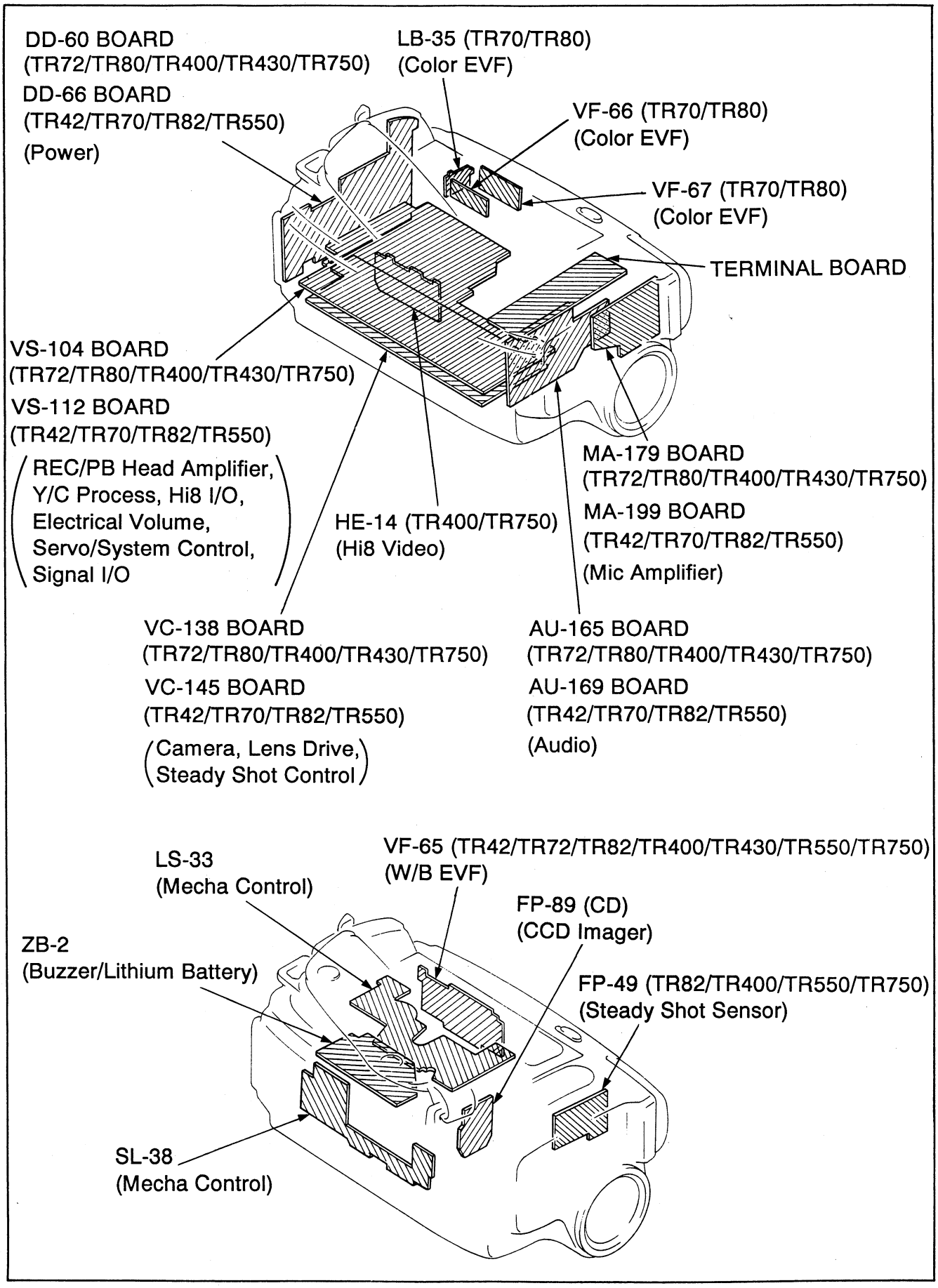

2-14. CIRCUIT BOARDS LOCATION

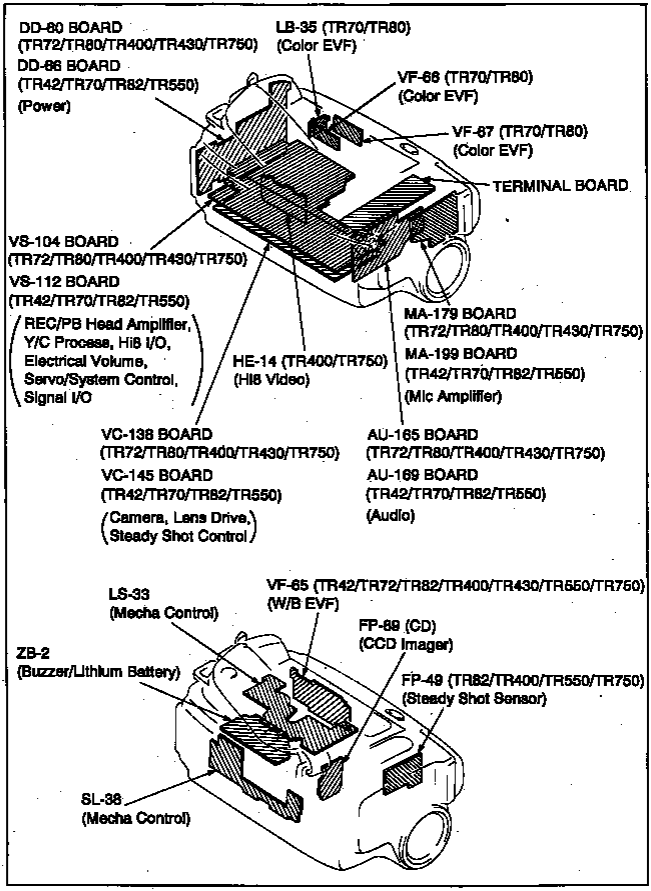

ZB-2 (BUZZER/LITHIUM BATTERY) PRINTED WIRING BOARD

— Ref. No. ZB-2 BOARD: 4000 series —

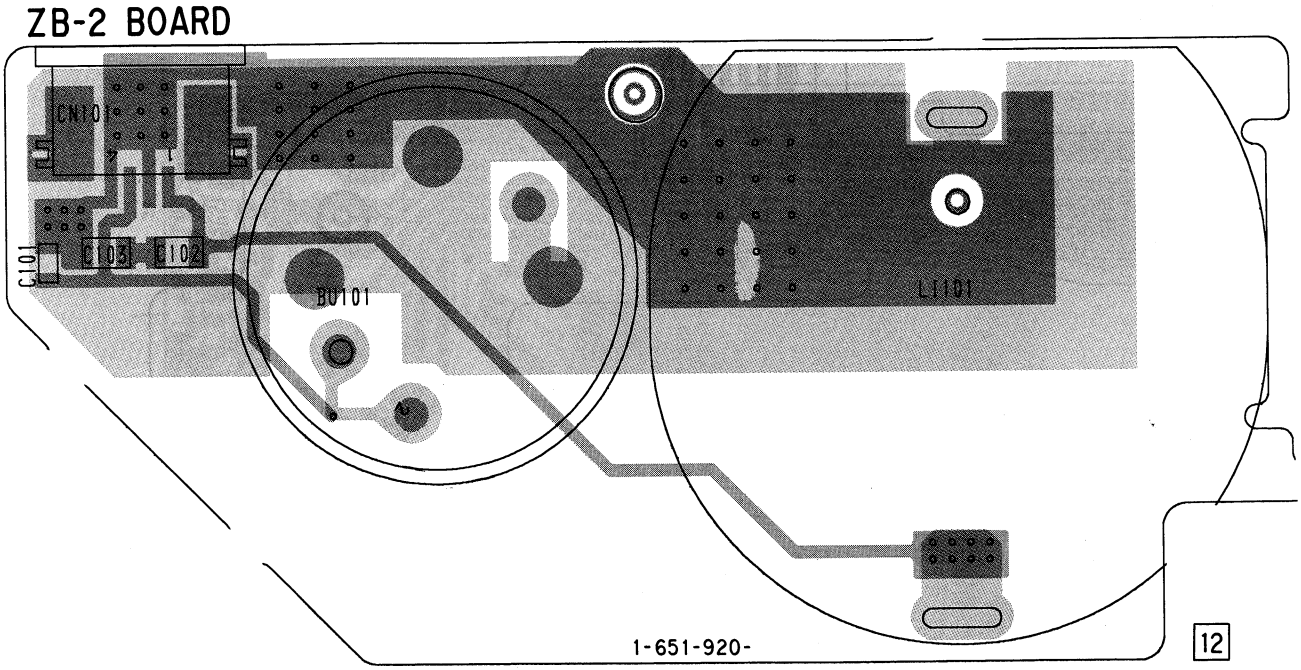

- **For printed wiring board of ZB-2 board.**
- : Pattern from the side which enables seeing.
- : Pattern of the rear side.

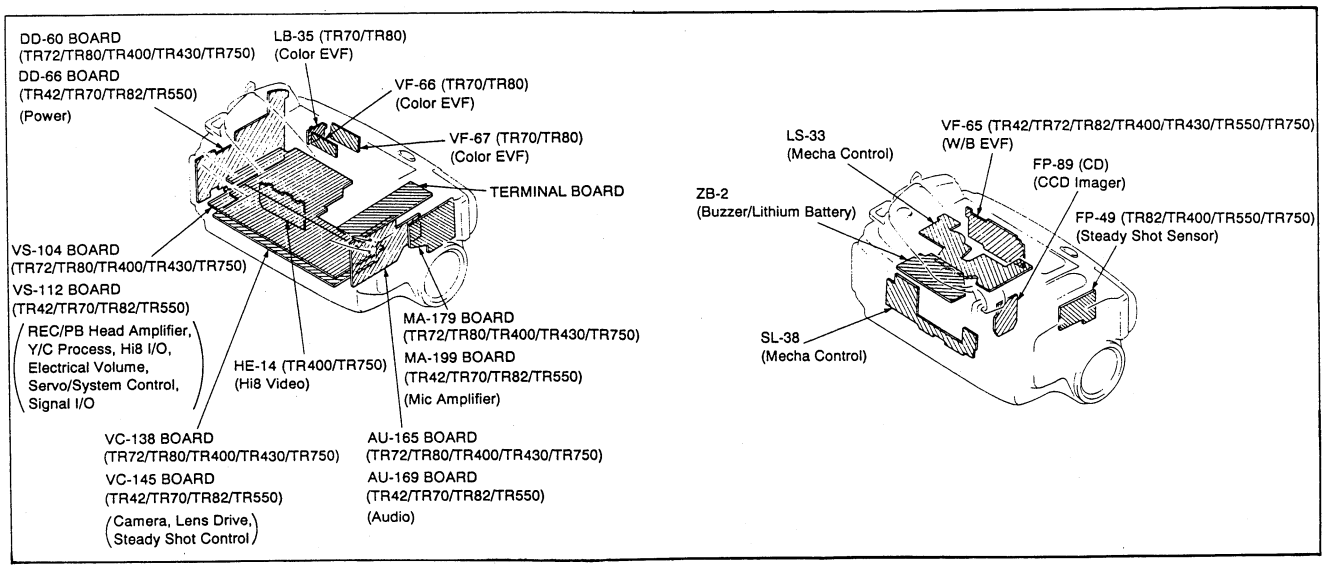

ZB-2 (BUZZER/LITHIUM BATTERY) PRINTED WIRING BOARD

— Ref. No. ZB-2 BOARD: 4000 series —

ZB-2 BOARD

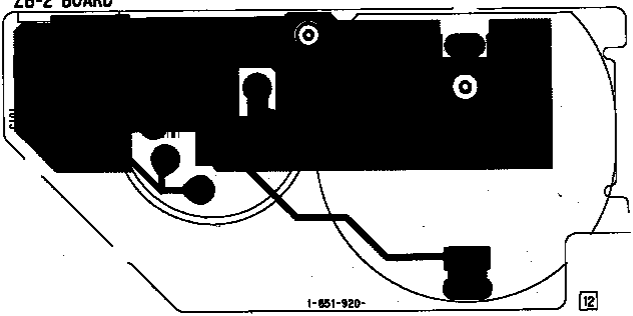

- For printed wiring board of ZB-2 board.
- ■ : Pattern from the side which enables seeing.
- ■ : Pattern of the rear side.

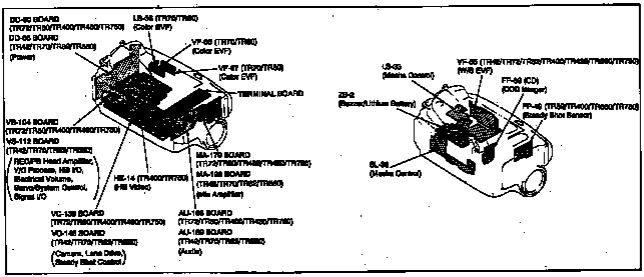

ZB-2 (BUZZER/LITHIUM BATTERY) SCHEMATIC DIAGRAM

— Ref. No. ZB-2 BOARD: 4000 series —

ZB-2 BOARD

·CONTROL SWITCH BLOCK (CK)
is replaced as a block, so that there
SCHEMATIC DIAGRAM
PRINTED WIRING BOARD
is omitted.

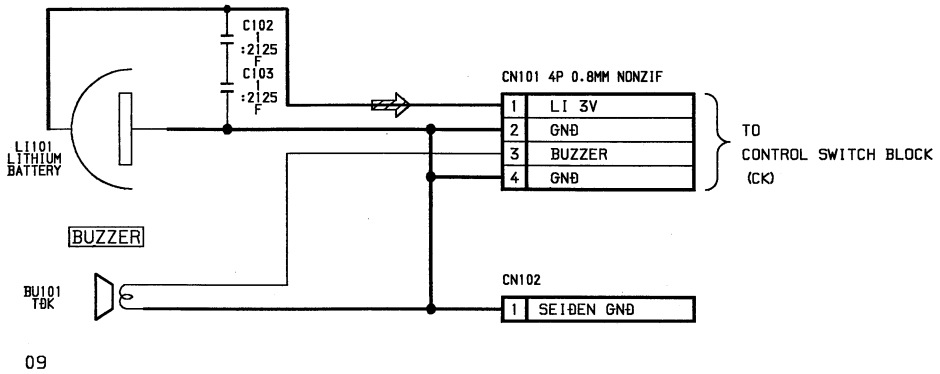

ZB-2 (BUZZER/LITHIUM BATTERY) ●SCHEMATIC DIAGRAM

— Ref. No. ZB-2 BOARD: 4000 series —

ZB-2 BOARD

•CONTROL SWITCH BLOCK (CS)
Is replaced as a block, so that there
SCHEMATIC DIAGRAM
PRINTED WIRING BOARD
Is omitted.

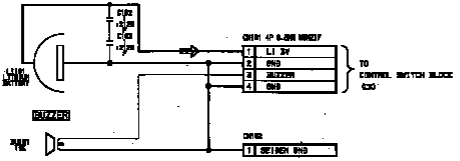

VF-65 (W/B EVF) PRINTED WIRING BOARD (TR42/TR72/TR82/TR400/TR430/TR550/TR750)

— Ref. No. VF-65 BOARD: 8000 series —

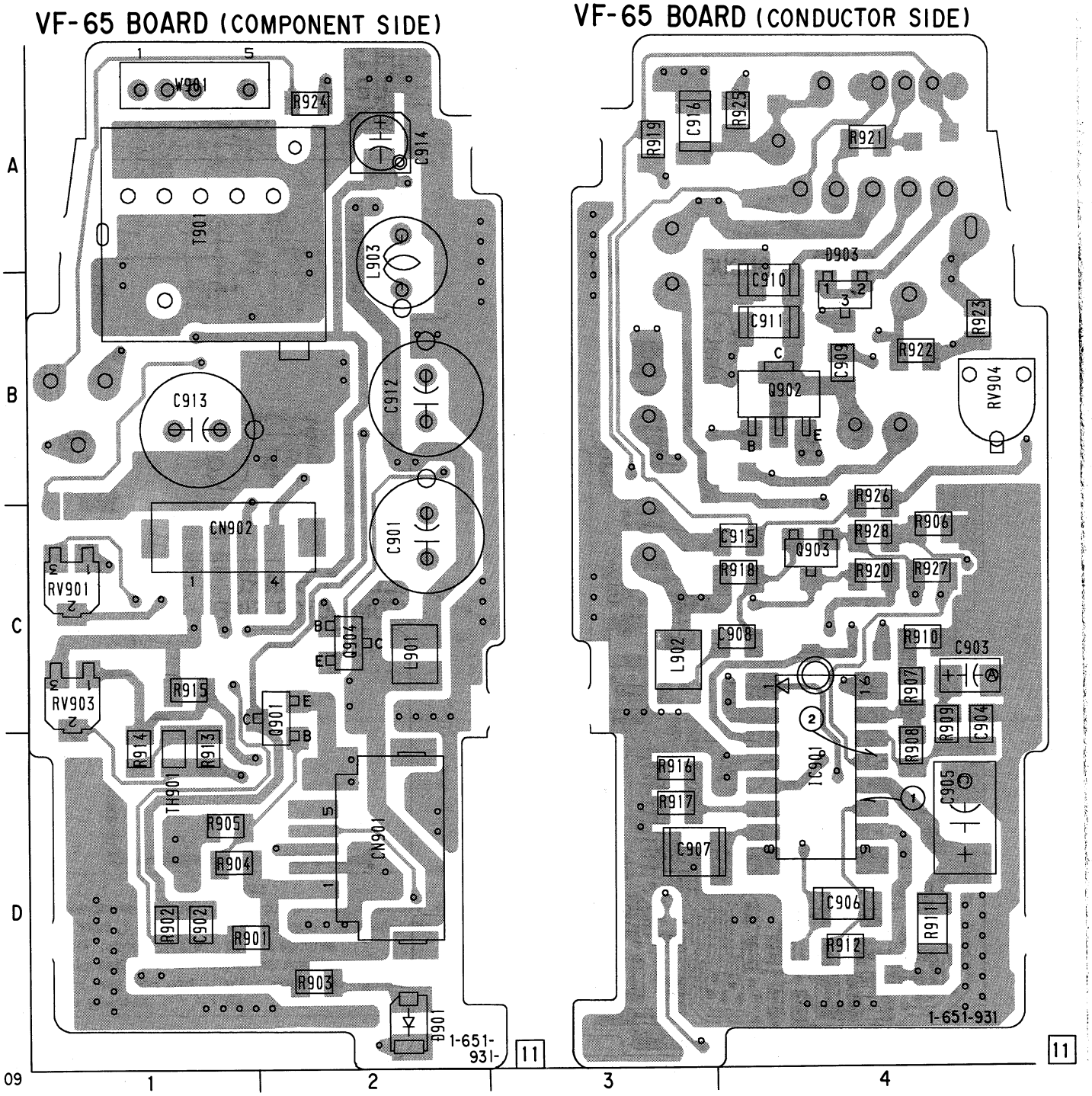

- **For printed wiring boards.**
- VF-65 board is a four-layer print board. However, the patterns of layers 2 to 3 have not been included in the diagram.

VF-65 (W/B EVF) PRINTED WIRING BOARD (TR42/TR72/TR82/TR400/TR430/TR550/TR750)

— Ref. No. VF-65 BOARD: 8000 series —

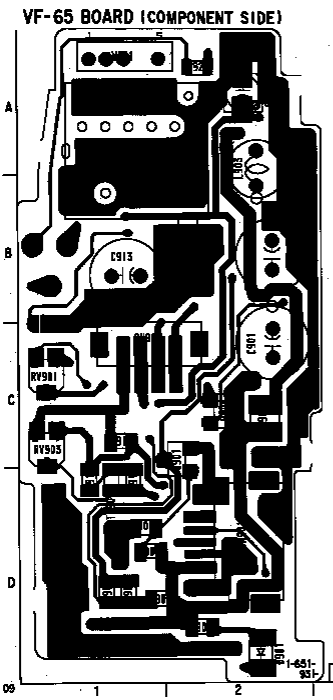

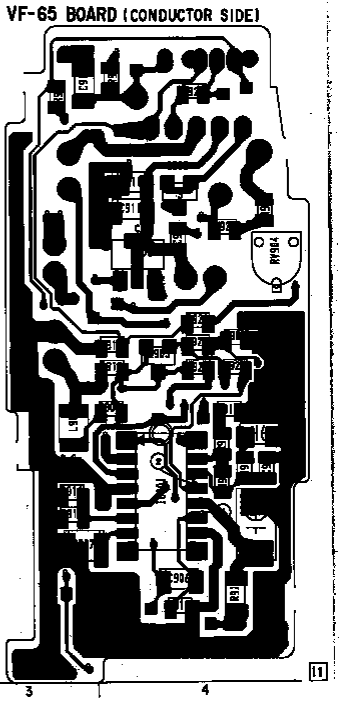

- For printed wiring boards.
- VF-65 board is a four-layer print board. However, the patterns of layers 2 to 3 have not been included in the diagram.

5-1-10. MECHANISM CHASSIS ASSEMBLY (1)

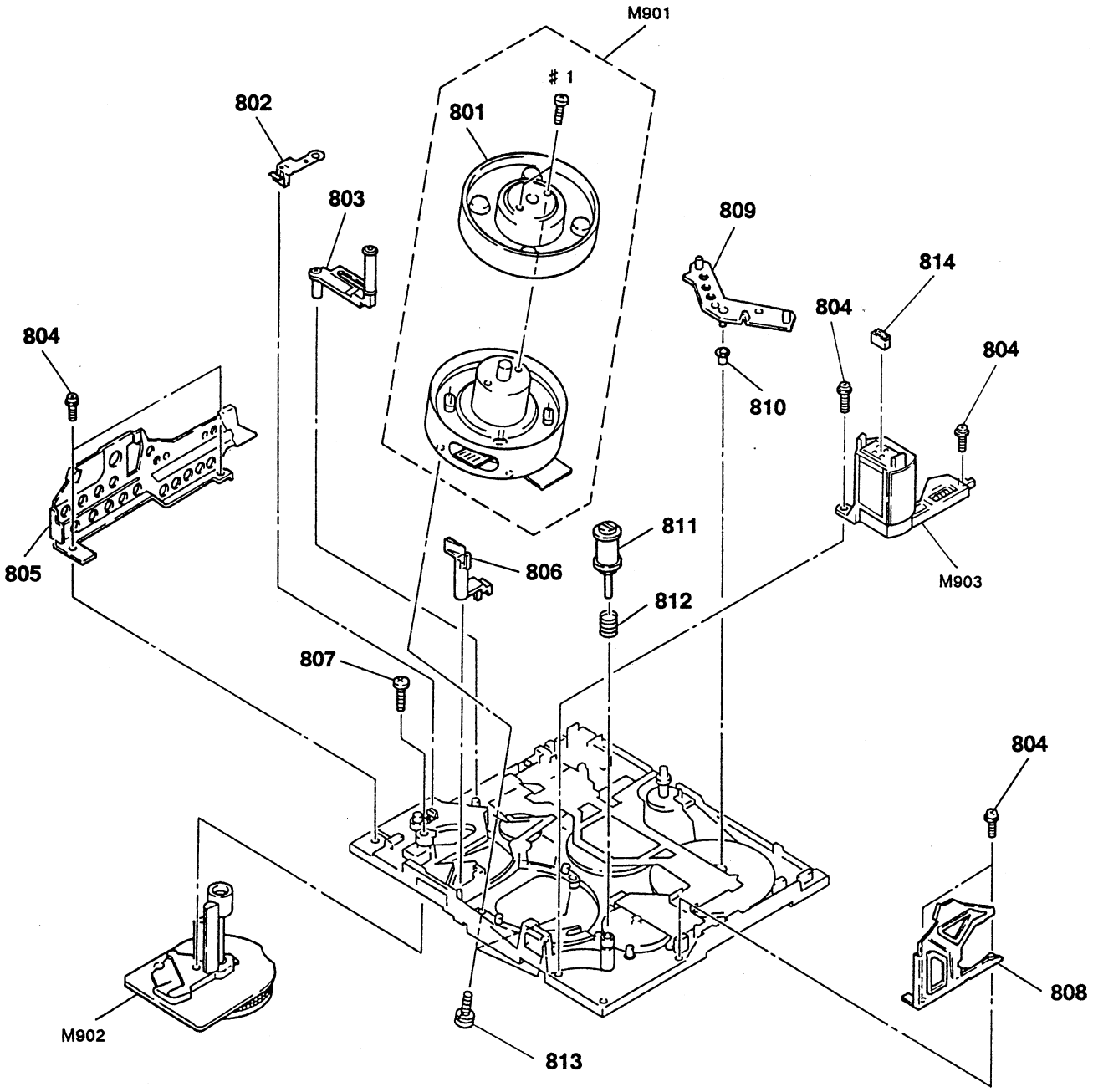

Ref. No.	Part No.	Description	Remark
801	A-7049-501-A	DRUM ASSY, UPPER (DGR-78-R) (TR42/TR70/TR72/TR80/TR82/TR430/TR550)	
801	A-7049-567-A	DRUM ASSY, UPPER (DGR-92-R) (TR400/TR750)	
802	3-945-822-01	SPRING, LEAF, TG7 ARM	
803	A-7040-305-A	ARM BLOCK ASSY, TG7	
804	3-947-503-01	SCREW (M1.4X2.5)	
805	X-3941-255-1	PLATE (T) ASSY, SIDE	
806	3-945-735-01	ARM, HC CONVERSION	
807	3-713-786-71	SCREW (M2X5)	
808	3-945-691-01	PLATE (S), SIDE	
809	3-945-701-01	ARM, LS	
810	3-945-702-01	ROLLER, LS	
811	X-3941-262-1	ROLLER ASSY, TG2	
812	3-956-651-01	SPRING, COMPRESSION	
813	3-686-493-01	SCREW (M2X5), P1	
814	1-568-323-11	CONNECTOR, BOARD TO BOARD 4P	
M901	A-7048-564-A	DRUM ASSY (DGH-78A-R) (TR42/TR70/TR72/TR80/TR82/TR430/TR550)	
M901	A-7048-633-A	DRUM ASSY (DGH-92A-R) (TR400/TR750)	
M902	8-835-477-12	MOTOR, DC SCE-0101A (CAPSTAN)	
M903	A-7040-304-A	MOTOR BLOCK ASSY, LM (LOADING)	

5-1-10. MECHANISM CHASSIS ASSEMBLY (1)

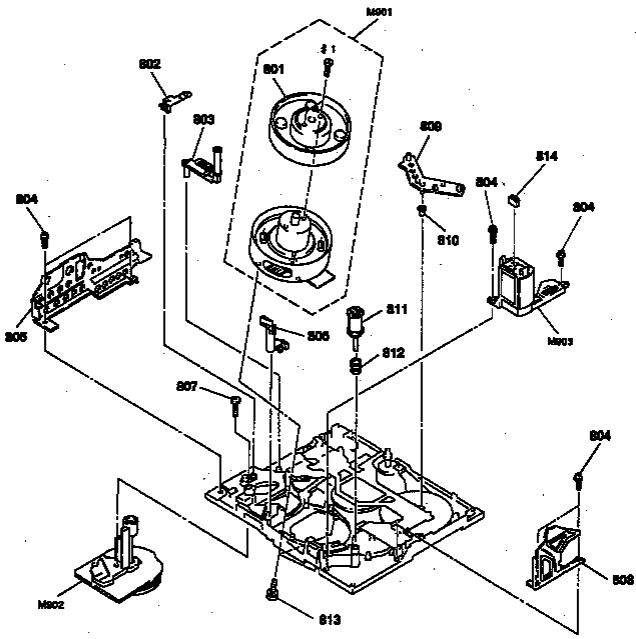

Ref.No.	Part No.	Description	Remark
801	A-7049-501-A	DRUM ASSY, UPPER (DCR-TR-K) (TR42/TR70/TR72/TR80/TR82/TR430/TR550)	
801	A-7049-587-A	DRUM ASSY, UPPER (DCR-SR-K) (TR400/TR750)	
802	3-945-622-01	SPRING, LEAF, TGT ARM	
803	A-7040-305-A	ARM BLOCK ASSY, TGT	
804	3-947-503-01	SCREW (M1.4X2.5)	
805	X-3941-265-1	PLATE (1) ASSY, SIDE	
806	3-945-725-01	ARM, PC CONVERSION	
807	3-712-786-71	SCREW (M2X5)	
808	3-945-691-01	PLATE (S), SIDE	
809	3-945-701-01	ARM, LS	
810	3-945-702-01	ROLLER, LS	
811	X-3941-383-1	ROLLER ASSY, TGS	
812	3-951-651-01	SPRING, COMPRESSION	
813	3-885-893-01	SCREW (M2X10), PT	
814	1-569-339-11	CONNECTOR, BOARD TO BOARD 4P	
M901	A-7048-564-A	DRUM ASSY (DCR-TR-K) (TR42/TR70/TR72/TR80/TR82/TR430/TR550)	
M901	A-7048-633-A	DRUM ASSY (DCR-SR-K) (TR400/TR750)	
M902	8-835-477-12	MOTOR, DC SCR-0101A (CAPSTAN)	
M903	A-7040-304-A	MOTOR BLOCK ASSY, LM (LOADING)	

5-1-11. MECHANISM CHASSIS ASSEMBLY (2)

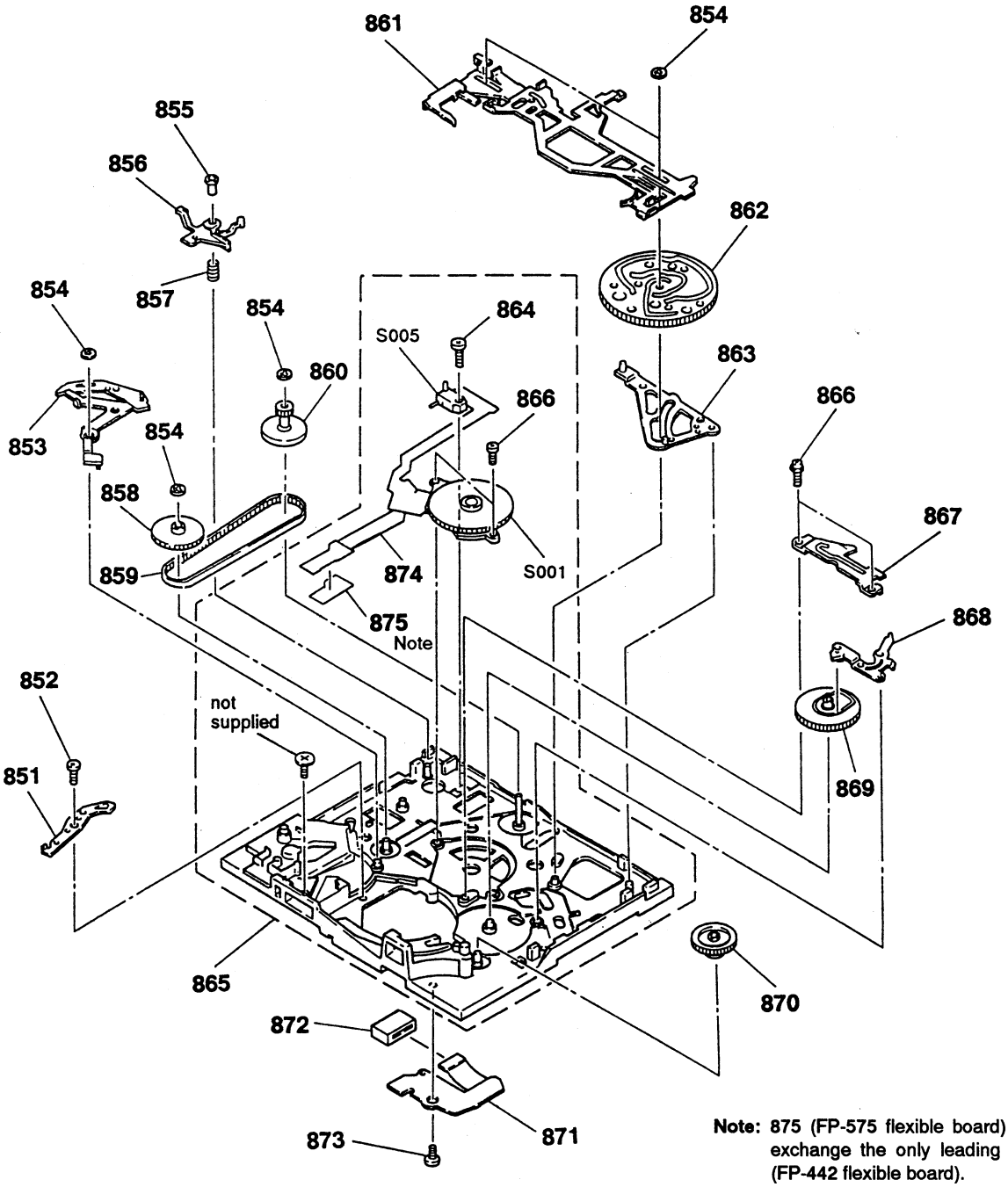

Note: 875 (FP-575 flexible board) is part that exchange the only leading part of 874 (FP-442 flexible board).

Ref. No.	Part No.	Description	Remark
851	3-945-734-01	ARM, HC DRIVING	
852	3-728-103-11	SCREW (M1.4X1.6), SPECIAL HEAD	
853	X-3941-259-1	ARM ASSY, PINCH PRESS	
854	3-726-829-01	WASHER, STOPPER	
855	3-945-730-01	SLEEVE, EJECT	
856	3-945-706-01	LEVER, EJECT	
857	3-945-729-01	SPRING, COMPRESSION	
858	X-3941-256-1	GEAR ASSY, CHANGE	
859	3-944-539-01	BELT, RELAY	
860	3-945-695-01	PULLEY, RELAY	
861	X-3941-260-1	SLIDER ASSY, M	
862	3-945-696-02	CAM	
863	X-3941-258-1	ARM ASSY, GL	
864	3-713-786-71	SCREW (M2X5)	
865	A-7040-303-A	CHASSIS ASSY, MECHANICAL	
866	3-947-503-01	SCREW (M1.4X2.5)	
867	3-945-722-01	RETAINER, GEAR	
868	X-3941-257-1	ARM ASSY, FF	
869	3-945-697-01	GEAR (B), L	
870	3-945-700-01	GEAR (A), L	
871	1-641-643-12	FP-444 FLEXIBLE BOARD	
872	1-691-254-13	CONNECTOR, TRANSLATION 10P	
873	3-945-756-01	SCREW (M1.4X3)	
874	1-641-639-13	FP-442 FLEXIBLE BORD	
875	1-645-271-11	FP-575 FLEXIBLE BORD	
S001	1-572-986-11	SWITCH, ROTARY (ENCODER)	
S005	1-570-771-21	SWITCH (C DOWN)	

5-1-11. MECHANISM CHASSIS ASSEMBLY (2)

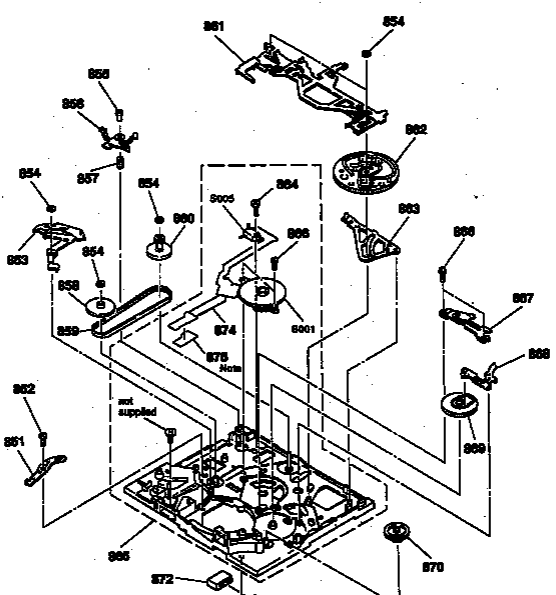

Note: 875 (FP-575 flexible board) is part that exchange the only leading part of 874 (FP-442 flexible board).

Ref. No.	Part No.	Description	Remark
851	3-945-734-01	ARM, DC DRIVING	
852	3-725-109-11	SCREW (BH, 4T1.8), SPECIAL HEAD	
853	X-3941-259-1	ARM ASSY, PINCH PRESS	
854	3-725-829-01	WASHER, STOPPER	
855	3-945-730-01	SLEEVE, EJECT	
856	3-945-706-01	LEVER, EJECT	
857	3-945-729-01	SPRING, COMPRESSION	
858	X-3941-258-1	GEAR ASSY, CHANGE	
859	3-944-598-01	BELT, RELAY	
860	3-945-896-01	PULLEY, RELAY	
861	X-3941-260-1	SLIDER ASSY, W	
862	3-945-828-02	CAM	
863	X-3941-258-1	ARM ASSY, GL	
864	3-713-788-71	SCREW (BRZZS)	
865	A-7040-303-A	CHASSIS ASSY, MECHANICAL	
866	3-947-608-01	SCREW (BH, 4X2.5)	
867	3-945-722-01	METALHEED, GEAR	
868	X-3941-257-1	ARM ASSY, FF	
869	3-945-697-01	GEAR (B), L	
870	3-945-700-01	GEAR (A), L	
871	1-541-648-12	FP-444 FLEXIBLE BOARD	
872	1-681-254-13	CONNECTOR, TRANSLATION 10P	
873	3-945-798-01	SCREW (BH, 4X3)	
874	1-541-639-13	FP-442 FLEXIBLE BORD	
875	1-545-211-11	FP-575 FLEXIBLE BORD	
S001	1-572-896-11	SWITCH, ROTARY (ENCODER)	
S005	1-570-771-21	SWITCH (C DOWN)	

5-2. ELECTRICAL PARTS LIST

NOTE:

The components identified by mark ⚠ or dotted line with mark ⚠ are critical for safety.
Replace only with part number specified.

Les composants identifiés par une marque ⚠ sont critiques pour la sécurité.
Ne les remplacer que par une piéce portant le numéro spécifié.

When indicating parts by reference number, please include the board name.

- Due to standardization, replacements in the parts list may be different from the parts specified in the diagrams or the components used on the set.
- -XX, -X mean standardized parts, so they may have some difference from the original one.
- RESISTORS
  All resistors are in ohms
  METAL: Metal-film resistor
  METAL OXIDE: Metal Oxide-film resistor
  F : nonflammable
- Hardware (# mark) list is given in the last of this parts list.
- Canadian model is abbreviated as CND.
- Items marked "*" are not stocked since they are seldom required for routine service. Some delay should be anticipated when ordering these items.
- SEMICONDUCTORS
  In each case, u: μ , for example:
  uA...: μA..., uPA...: μPA...,
  uPB...: μPB..., uPC...: μPC...,
  uPD...: μPD...
- CAPACITORS
  uF : μF
- COILS
  uH : μH

Ref. No.	Part No.	Description			Remark
*	A-7063-958-A	AU-165 BOARD, COMPLETE			
		**********			
		(TR72/TR80/TR400/TR430/TR750)			
		(Ref. No. 10,000 Series)			
		< CAPACITOR >			
C1302	1-162-970-11	CERAMIC CHIP	0.01uF	10%	25V
C1303	1-164-004-11	CERAMIC CHIP	0.1uF	10%	25V
C1304	1-135-181-21	TANTALUM CHIP	4.7uF	20%	6.3V
C1305	1-164-004-11	CERAMIC CHIP	0.1uF	10%	25V
C1306	1-126-205-11	ELECT CHIP	47uF	20%	6.3V
C1307	1-126-205-11	ELECT CHIP	47uF	20%	6.3V
C1308	1-135-181-21	TANTALUM CHIP	4.7uF	20%	6.3V
C1309	1-126-205-11	ELECT CHIP	47uF	20%	6.3V
C1310	1-126-205-11	ELECT CHIP	47uF	20%	6.3V
C1311	1-126-205-11	ELECT CHIP	47uF	20%	6.3V
C1312	1-126-205-11	ELECT CHIP	47uF	20%	6.3V
C1313	1-162-953-11	CERAMIC CHIP	100PF	5%	50V
C1314	1-162-953-11	CERAMIC CHIP	100PF	5%	50V
C1315	1-126-209-11	ELECT	100uF	20%	4V
C1316	1-135-259-11	TANTAL. CHIP	10uF	20%	6.3V
C1318	1-164-004-11	CERAMIC CHIP	0.1uF	10%	25V
C1319	1-162-953-11	CERAMIC CHIP	100PF	5%	50V
C1321	1-135-181-21	TANTALUM CHIP	4.7uF	20%	6.3V
C1323	1-164-004-11	CERAMIC CHIP	0.1uF	10%	25V
C1326	1-135-181-21	TANTALUM CHIP	4.7uF	20%	6.3V
C1327	1-135-181-21	TANTALUM CHIP	4.7uF	20%	6.3V
C1328	1-135-091-21	TANTAL. CHIP	1uF	20%	16V
C1329	1-135-091-21	TANTAL. CHIP	1uF	20%	16V
C1330	1-135-259-11	TANTAL. CHIP	10uF	20%	6.3V
C1331	1-135-259-11	TANTAL. CHIP	10uF	20%	6.3V
C1332	1-135-181-21	TANTALUM CHIP	4.7uF	20%	6.3V
C1333	1-135-181-21	TANTALUM CHIP	4.7uF	20%	6.3V
C1334	1-162-966-11	CERAMIC CHIP	0.0022uF	10%	50V
C1335	1-162-966-11	CERAMIC CHIP	0.0022uF	10%	50V
C1336	1-135-148-21	TANTAL. CHIP	1.5uF	20%	10V
C1337	1-135-148-21	TANTAL. CHIP	1.5uF	20%	10V
C1338	1-162-966-11	CERAMIC CHIP	0.0022uF	10%	50V
C1339	1-162-966-11	CERAMIC CHIP	0.0022uF	10%	50V
C1340	1-162-966-11	CERAMIC CHIP	0.0022uF	10%	50V
C1341	1-162-966-11	CERAMIC CHIP	0.0022uF	10%	50V
C1343	1-164-004-11	CERAMIC CHIP	0.1uF	10%	25V
C1344	1-164-346-11	CERAMIC CHIP	1uF		16V
C1345	1-162-967-11	CERAMIC CHIP	0.0033uF	10%	50V
C1346	1-162-970-11	CERAMIC CHIP	0.01uF	10%	25V
C1347	1-162-970-11	CERAMIC CHIP	0.01uF	10%	25V
C1348	1-164-004-11	CERAMIC CHIP	0.1uF	10%	25V
C1349	1-162-970-11	CERAMIC CHIP	0.01uF	10%	25V
C1350	1-164-004-11	CERAMIC CHIP	0.1uF	10%	25V
C1352	1-164-004-11	CERAMIC CHIP	0.1uF	10%	25V
C1353	1-164-004-11	CERAMIC CHIP	0.1uF	10%	25V
C1355	1-164-004-11	CERAMIC CHIP	0.1uF	10%	25V
C1356	1-135-259-11	TANTAL. CHIP	10uF	20%	6.3V
C1357	1-135-259-11	TANTAL. CHIP	10uF	20%	6.3V
C1358	1-162-970-11	CERAMIC CHIP	0.01uF	10%	25V
C1359	1-162-970-11	CERAMIC CHIP	0.01uF	10%	25V
C1360	1-162-970-11	CERAMIC CHIP	0.01uF	10%	25V
C1361	1-162-970-11	CERAMIC CHIP	0.01uF	10%	25V
C1362	1-162-969-11	CERAMIC CHIP	0.0068uF	10%	25V
C1363	1-162-970-11	CERAMIC CHIP	0.01uF	10%	25V
C1364	1-162-970-11	CERAMIC CHIP	0.01uF	10%	25V
		< CONNECTOR >			
CN1301	1-691-490-21	CONNECTOR, FFC/FPC 11P			
* CN1302	1-691-933-11	CONNECTOR, BOARD TO BOARD 34P			
		< DIODE >			
D1302	8-719-404-46	DIODE	MA110		
D1303	8-719-045-87	DIODE	MA4Z082WA-TX		
D1304	8-719-045-87	DIODE	MA4Z082WA-TX		
		< FILTER >			
FL402	1-236-838-21	FILTER, BAND PASS (1.7MHz)			
FL1302	1-236-837-21	FILTER, BAND PASS (1.5MHz)			
		< IC >			
IC402	8-759-234-77	IC	TC4S66F		
IC1301	8-759-159-94	IC	LA7491W-TBM		
		< TRANSISTOR >			
Q1301	8-729-230-63	TRANSISTOR	2SC4116-YG		
Q1302	8-729-230-63	TRANSISTOR	2SC4116-YG		
Q1303	8-729-403-35	TRANSISTOR	UN5113		
Q1305	8-729-230-63	TRANSISTOR	2SC4116-YG		
Q1306	8-729-230-63	TRANSISTOR	2SC4116-YG		

5-2. ELECTRICAL PARTS LIST

NOTE:

The components identified by mark ⚠ or dotted line with mark ⚠ are critical for safety.
Replace only with part number specified.

Les composants identifiés par une marque ⚠ sont critiques pour la sécurité.
Ne les remplacer que par une pièce portant le numéro spécifié.

When indicating parts by reference number, please include the board name.

- Due to standardization, replacements in the parts list may be different from the parts specified in the diagrams or the components used on the set.
- ·XX, ·X mean standardized parts, so they may have some difference from the original one.
- RESISTORS
  All resistors are in ohms
  METAL: Metal-film resistor
  METAL OXIDE: Metal Oxide-film resistor
  F : nonflammable
- Hardware (# mark) list is given in the last of this parts list.
- Canadian model is abbreviated as CND.
- Items marked "*" are not stocked since they are seldom required for routine service. Some delay should be anticipated when ordering these items.
- SEMICONDUCTORS
  In each case, μ, for example:
  uA... : μA..., uPA... : μPA...,
  uPB... : μPB..., uPC... : μPC...,
  uPD... : μPD...
- CAPACITORS
  uF : μF
- COILS
  uH : μH

Ref. No.	Part No.	Description			Remark
*	A-7083-958-A	AU-165 BOARD, COMPLETE (TR72/TR80/TR40R/TR450/TR750) (Ref. No. 10,000 Series)			
		< CAPACITOR >			
C1302	1-162-970-11	CERAMIC CHIP	0.01uF	10%	25V
C1303	1-164-004-11	CERAMIC CHIP	0.1uF	10%	25V
C1304	1-135-181-21	TANTALUM CHIP	4.7uF	20%	6.3V
C1305	1-164-004-11	CERAMIC CHIP	0.1uF	10%	25V
C1306	1-126-205-11	ELECT CHIP	47uF	20%	6.3V
C1307	1-126-205-11	ELECT CHIP	47uF	20%	6.3V
C1308	1-135-181-21	TANTALUM CHIP	4.7uF	20%	6.3V
C1309	1-126-205-11	ELECT CHIP	47uF	20%	6.3V
C1310	1-126-205-11	ELECT CHIP	47uF	20%	6.3V
C1311	1-126-205-11	ELECT CHIP	47uF	20%	6.3V
C1312	1-126-205-11	ELECT CHIP	47uF	20%	6.3V
C1313	1-162-959-11	CERAMIC CHIP	100PF	5%	50V
C1314	1-162-959-11	CERAMIC CHIP	100PF	5%	50V
C1315	1-126-208-11	ELECT	100uF	20%	4V
C1316	1-135-258-11	TANTAL. CHIP	10uF	20%	6.3V
C1318	1-164-004-11	CERAMIC CHIP	0.1uF	10%	25V
C1319	1-162-959-11	CERAMIC CHIP	100PF	5%	50V
C1321	1-135-181-21	TANTALUM CHIP	4.7uF	20%	6.3V
C1322	1-164-004-11	CERAMIC CHIP	0.1uF	10%	25V
C1326	1-135-181-21	TANTALUM CHIP	4.7uF	20%	6.3V
C1327	1-135-181-21	TANTALUM CHIP	4.7uF	20%	6.3V
C1328	1-135-091-21	TANTAL. CHIP	1uF	20%	16V
C1329	1-135-091-21	TANTAL. CHIP	1uF	20%	16V
C1330	1-135-259-11	TANTAL. CHIP	10uF	20%	6.3V
C1331	1-135-259-11	TANTAL. CHIP	10uF	20%	6.3V
C1332	1-135-181-21	TANTALUM CHIP	4.7uF	20%	6.3V
C1333	1-135-181-21	TANTALUM CHIP	4.7uF	20%	6.3V
C1334	1-162-966-11	CERAMIC CHIP	0.0022uF	10%	50V
C1335	1-162-966-11	CERAMIC CHIP	0.0022uF	10%	50V
C1336	1-135-148-21	TANTAL. CHIP	1.5uF	20%	10V
C1337	1-135-148-21	TANTAL. CHIP	1.5uF	20%	10V
C1338	1-162-966-11	CERAMIC CHIP	0.0022uF	10%	50V
C1339	1-162-966-11	CERAMIC CHIP	0.0022uF	10%	50V
C1340	1-162-966-11	CERAMIC CHIP	0.0022uF	10%	50V
C1341	1-162-966-11	CERAMIC CHIP	0.0022uF	10%	50V
C1343	1-164-004-11	CERAMIC CHIP	0.1uF	10%	25V
C1344	1-164-846-11	CERAMIC CHIP	1uF		16V
C1345	1-162-967-11	CERAMIC CHIP	0.0033uF	10%	50V
C1346	1-162-970-11	CERAMIC CHIP	0.01uF	10%	25V
C1347	1-162-970-11	CERAMIC CHIP	0.01uF	10%	25V
C1348	1-164-004-11	CERAMIC CHIP	0.1uF	10%	25V
C1349	1-162-970-11	CERAMIC CHIP	0.01uF	10%	25V
C1350	1-164-004-11	CERAMIC CHIP	0.1uF	10%	25V
C1352	1-164-004-11	CERAMIC CHIP	0.1uF	10%	25V
C1353	1-164-004-11	CERAMIC CHIP	0.1uF	10%	25V
C1355	1-164-004-11	CERAMIC CHIP	0.1uF	10%	25V
C1356	1-135-269-11	TANTAL. CHIP	10uF	20%	6.3V
C1357	1-135-269-11	TANTAL. CHIP	10uF	20%	6.3V
C1358	1-162-970-11	CERAMIC CHIP	0.01uF	10%	25V
C1359	1-162-970-11	CERAMIC CHIP	0.01uF	10%	25V
C1360	1-162-970-11	CERAMIC CHIP	0.01uF	10%	25V
C1361	1-162-970-11	CERAMIC CHIP	0.01uF	10%	25V
C1362	1-163-969-11	CERAMIC CHIP	0.0068uF	10%	25V
C1363	1-162-970-11	CERAMIC CHIP	0.01uF	10%	25V
C1364	1-162-970-11	CERAMIC CHIP	0.01uF	10%	25V
		< CONNECTOR >			
CN1321	1-691-490-21	CONNECTOR, FPC/FFC 11P			
* CN1358	1-691-833-11	CONNECTOR, BOARD TO BOARD 54P			
		< DIODE >			
D1302	8-719-404-46	DIODE	MA110		
D1303	8-719-045-87	DIODE	MA4ZD82WA-TX		
D1304	8-719-045-87	DIODE	MA4ZD82WA-TX		
		< FILTER >			
FL402	1-236-838-21	FILTER, BAND PASS (1.7MHz)			
FL1302	1-236-837-21	FILTER, BAND PASS (1.5MHz)			
		< IC >			
IC402	8-759-234-77	IC	TC4SHEF		
IC1301	8-759-159-94	IC	LA7491N-TEM		
		< TRANSISTOR >			
Q1301	8-729-230-68	TRANSISTOR	2SC4116-YG		
Q1302	8-729-230-68	TRANSISTOR	2SC4116-YG		
Q1304	8-729-403-85	TRANSISTOR	DTC114		
Q1305	8-729-230-68	TRANSISTOR	2SC4116-YG		
Q1306	8-729-230-68	TRANSISTOR	2SC4116-YG		

Ref. No.	Part No.	Description				Remark
Q1311	8-729-230-63	TRANSISTOR	2SC4116-YG			
Q1312	8-729-402-42	TRANSISTOR	UN5213			
Q1313	8-729-403-35	TRANSISTOR	UN5113			
Q1315	8-729-402-42	TRANSISTOR	UN5213			
Q1316	8-729-230-63	TRANSISTOR	2SC4116-YG			
Q1317	8-729-230-63	TRANSISTOR	2SC4116-YG			
Q1318	8-729-402-81	TRANSISTOR	XN4501			
Q1319	8-729-402-81	TRANSISTOR	XN4501			
Q1320	8-729-230-63	TRANSISTOR	2SC4116-YG			
Q1321	8-729-420-12	TRANSISTOR	XN4213			
Q1322	8-729-420-12	TRANSISTOR	XN4213			
		< RESISTOR >				
R1301	1-216-823-11	METAL CHIP	1.5K	5%	1/16W	
R1302	1-216-841-11	METAL CHIP	47K	5%	1/16W	
R1303	1-216-831-11	METAL CHIP	6.8K	5%	1/16W	
R1304	1-216-810-11	METAL CHIP	120	5%	1/16W	
R1305	1-216-810-11	METAL CHIP	120	5%	1/16W	
R1306	1-216-817-11	METAL CHIP	470	5%	1/16W	
R1307	1-216-817-11	METAL CHIP	470	5%	1/16W	
R1308	1-216-833-11	METAL CHIP	10K	5%	1/16W	
R1309	1-216-833-11	METAL CHIP	10K	5%	1/16W	
R1312	1-216-831-11	METAL CHIP	6.8K	5%	1/16W	
R1316	1-216-839-11	METAL CHIP	33K	5%	1/16W	
R1317	1-216-833-11	METAL CHIP	10K	5%	1/16W	
R1318	1-216-833-11	METAL CHIP	10K	5%	1/16W	
R1321	1-216-829-11	METAL CHIP	4.7K	5%	1/16W	
R1322	1-216-829-11	METAL CHIP	4.7K	5%	1/16W	
R1323	1-216-823-11	METAL CHIP	1.5K	5%	1/16W	
R1324	1-216-841-11	METAL CHIP	47K	5%	1/16W	
R1325	1-216-841-11	METAL CHIP	47K	5%	1/16W	
R1330	1-216-833-11	METAL CHIP	10K	5%	1/16W	
R1331	1-216-833-11	METAL CHIP	10K	5%	1/16W	
R1334	1-216-839-11	METAL CHIP	33K	5%	1/16W	
R1335	1-216-839-11	METAL CHIP	33K	5%	1/16W	
R1336	1-216-841-11	METAL CHIP	47K	5%	1/16W	
R1337	1-216-839-11	METAL CHIP	33K	5%	1/16W	
R1338	1-216-863-11	METAL GLAZE	3.3M	5%	1/16W	
R1340	1-216-833-11	METAL CHIP	10K	5%	1/16W	
R1341	1-216-863-11	METAL GLAZE	3.3M	5%	1/16W	
R1342	1-216-821-11	METAL CHIP	1K	5%	1/16W	
R1346	1-216-864-11	METAL CHIP	0	5%	1/16W	
R1347	1-216-864-11	METAL CHIP	0	5%	1/16W	
R1348	1-216-847-11	METAL CHIP	150K	5%	1/16W	
R1349	1-216-827-11	METAL CHIP	3.3K	5%	1/16W	
R1350	1-216-832-11	METAL CHIP	8.2K	5%	1/16W	
R1351	1-216-841-11	METAL CHIP	47K	5%	1/16W	
R1352	1-216-864-11	METAL CHIP	0	5%	1/16W	
R1353	1-216-817-11	METAL CHIP	470	5%	1/16W	
R1354	1-216-817-11	METAL CHIP	470	5%	1/16W	
R1355	1-216-833-11	METAL CHIP	10K	5%	1/16W	
R1356	1-216-833-11	METAL CHIP	10K	5%	1/16W	
R1357	1-216-827-11	METAL CHIP	3.3K	5%	1/16W	
R1358	1-216-825-11	METAL CHIP	2.2K	5%	1/16W	
R1359	1-216-826-11	METAL CHIP	2.7K	5%	1/16W	
R1360	1-216-827-11	METAL CHIP	3.3K	5%	1/16W	
R1361	1-216-836-11	METAL CHIP	18K	5%	1/16W	
R1362	1-216-837-11	METAL CHIP	22K	5%	1/16W	
R1363	1-216-825-11	METAL CHIP	2.2K	5%	1/16W	
R1364	1-216-826-11	METAL CHIP	2.7K	5%	1/16W	
R1365	1-216-821-11	METAL CHIP	1K	5%	1/16W	
R1366	1-216-821-11	METAL CHIP	1K	5%	1/16W	
R1367	1-216-821-11	METAL CHIP	1K	5%	1/16W	
R1368	1-216-821-11	METAL CHIP	1K	5%	1/16W	
R1369	1-216-825-11	METAL CHIP	2.2K	5%	1/16W	
R1370	1-216-837-11	METAL CHIP	22K	5%	1/16W	
R1371	1-216-836-11	METAL CHIP	18K	5%	1/16W	
R1372	1-216-837-11	METAL CHIP	22K	5%	1/16W	
R1373	1-216-841-11	METAL CHIP	47K	5%	1/16W	
R1375	1-216-829-11	METAL CHIP	4.7K	5%	1/16W	
R1376	1-216-841-11	METAL CHIP	47K	5%	1/16W	
R1381	1-216-864-11	METAL CHIP	0	5%	1/16W	

****

* A-7063-952-A AU-169 BOARD, COMPLETE
****
(TR42/TR70/TR82/TR550)
(Ref. No. 5,000 Series)

< CAPACITOR >

C402	1-165-176-11	CERAMIC CHIP	0.047uF	10%	16V
C403	1-164-004-11	CERAMIC CHIP	0.1uF	10%	25V
C404	1-164-004-11	CERAMIC CHIP	0.1uF	10%	25V
C405	1-164-677-11	CERAMIC CHIP	0.033uF	10%	16V
C407	1-162-957-11	CERAMIC CHIP	220PF	5%	50V
C408	1-164-232-11	CERAMIC CHIP	0.01uF		50V
C409	1-162-970-11	CERAMIC CHIP	0.01uF	10%	25V
C411	1-126-205-11	ELECT CHIP	47uF	20%	6.3V
C412	1-126-205-11	ELECT CHIP	47uF	20%	6.3V
C413	1-126-209-11	ELECT	100uF	20%	4V
C414	1-128-006-11	ELECT CHIP	4.7uF	20%	25V
C415	1-128-004-11	ELECT CHIP	10uF	20%	16V
C416	1-162-951-11	CERAMIC CHIP	68PF	5%	50V
C418	1-164-004-11	CERAMIC CHIP	0.1uF	10%	25V
C419	1-162-967-11	CERAMIC CHIP	0.0033uF	10%	50V
C421	1-162-974-11	CERAMIC CHIP	0.01uF		50V
C422	1-164-674-11	CERAMIC CHIP	1800PF	5%	16V
C423	1-164-471-11	CERAMIC CHIP	680PF	5%	50V
C424	1-162-949-11	CERAMIC CHIP	47PF	5%	50V
C425	1-164-346-11	CERAMIC CHIP	1uF		16V

Ref. No.	Part No.	Description				Remark
Q1311	8-729-230-63	TRANSISTOR	2SC4116-YG			
Q1312	8-729-402-42	TRANSISTOR	UN5213			
Q1313	8-729-403-35	TRANSISTOR	UN5113			
Q1315	8-729-402-42	TRANSISTOR	UN5213			
Q1316	8-729-230-63	TRANSISTOR	2SC4116-YG			
Q1317	8-729-230-63	TRANSISTOR	2SC4116-YG			
Q1318	8-729-403-81	TRANSISTOR	XN4501			
Q1319	8-729-403-81	TRANSISTOR	XN4501			
Q1320	8-729-230-63	TRANSISTOR	2SC4116-YG			
Q1321	8-729-420-12	TRANSISTOR	XN4216			
Q1322	8-729-420-13	TRANSISTOR	XN4215			

< RESISTOR >

Ref. No.	Part No.	Description				Remark
R1301	1-216-823-11	METAL CHIP	1.5K	5%	1/16W	
R1302	1-216-841-11	METAL CHIP	47K	5%	1/16W	
R1303	1-216-831-11	METAL CHIP	6.8K	5%	1/16W	
R1304	1-216-810-11	METAL CHIP	120	5%	1/16W	
R1305	1-216-810-11	METAL CHIP	120	5%	1/16W	
R1306	1-216-817-11	METAL CHIP	470	5%	1/16W	
R1307	1-216-817-11	METAL CHIP	470	5%	1/16W	
R1308	1-216-833-11	METAL CHIP	10K	5%	1/16W	
R1309	1-216-833-11	METAL CHIP	10K	5%	1/16W	
R1312	1-216-831-11	METAL CHIP	6.8K	5%	1/16W	
R1316	1-216-839-11	METAL CHIP	33K	5%	1/16W	
R1317	1-216-833-11	METAL CHIP	10K	5%	1/16W	
R1318	1-216-833-11	METAL CHIP	10K	5%	1/16W	
R1321	1-216-829-11	METAL CHIP	4.7K	5%	1/16W	
R1322	1-216-829-11	METAL CHIP	4.7K	5%	1/16W	
R1323	1-216-823-11	METAL CHIP	1.5K	5%	1/16W	
R1324	1-216-841-11	METAL CHIP	47K	5%	1/16W	
R1325	1-216-841-11	METAL CHIP	47K	5%	1/16W	
R1330	1-216-833-11	METAL CHIP	10K	5%	1/16W	
R1331	1-216-833-11	METAL CHIP	10K	5%	1/16W	
R1334	1-216-839-11	METAL CHIP	33K	5%	1/16W	
R1335	1-216-839-11	METAL CHIP	33K	5%	1/16W	
R1336	1-216-841-11	METAL CHIP	47K	5%	1/16W	
R1337	1-216-839-11	METAL CHIP	33K	5%	1/16W	
R1338	1-216-853-11	METAL GLAZE	3.3M	5%	1/16W	
R1340	1-216-833-11	METAL CHIP	10K	5%	1/16W	
R1341	1-216-853-11	METAL GLAZE	3.3M	5%	1/16W	
R1342	1-216-821-11	METAL CHIP	1K	5%	1/16W	
R1346	1-216-864-11	METAL CHIP	0	5%	1/16W	
R1347	1-216-864-11	METAL CHIP	0	5%	1/16W	
R1348	1-216-847-11	METAL CHIP	150K	5%	1/16W	
R1349	1-216-827-11	METAL CHIP	3.3K	5%	1/16W	
R1350	1-216-832-11	METAL CHIP	8.2K	5%	1/16W	
R1351	1-216-841-11	METAL CHIP	47K	5%	1/16W	
R1352	1-216-864-11	METAL CHIP	0	5%	1/16W	
R1353	1-216-817-11	METAL CHIP	470	5%	1/16W	
R1354	1-216-817-11	METAL CHIP	470	5%	1/16W	
R1355	1-216-833-11	METAL CHIP	10K	5%	1/16W	
R1356	1-216-833-11	METAL CHIP	10K	5%	1/16W	
R1357	1-216-827-11	METAL CHIP	3.3K	5%	1/16W	
R1358	1-216-825-11	METAL CHIP	2.2K	5%	1/16W	
R1359	1-216-826-11	METAL CHIP	2.7K	5%	1/16W	
R1360	1-216-827-11	METAL CHIP	3.3K	5%	1/16W	
R1361	1-216-836-11	METAL CHIP	18K	5%	1/16W	
R1362	1-216-837-11	METAL CHIP	22K	5%	1/16W	
R1363	1-216-825-11	METAL CHIP	2.2K	5%	1/16W	
R1364	1-216-826-11	METAL CHIP	2.7K	5%	1/16W	
R1365	1-216-821-11	METAL CHIP	1K	5%	1/16W	
R1366	1-216-821-11	METAL CHIP	1K	5%	1/16W	
R1367	1-216-821-11	METAL CHIP	1K	5%	1/16W	
R1368	1-216-821-11	METAL CHIP	1K	5%	1/16W	
R1369	1-216-825-11	METAL CHIP	2.2K	5%	1/16W	
R1370	1-216-837-11	METAL CHIP	22K	5%	1/16W	
R1371	1-216-836-11	METAL CHIP	18K	5%	1/16W	
R1372	1-216-837-11	METAL CHIP	22K	5%	1/16W	
R1373	1-216-841-11	METAL CHIP	47K	5%	1/16W	
R1375	1-216-829-11	METAL CHIP	4.7K	5%	1/16W	
R1376	1-216-841-11	METAL CHIP	47K	5%	1/16W	
R1381	1-216-864-11	METAL CHIP	0	5%	1/16W	

****

* A-7063-962-A AU-169 BOARD, COMPLETE

****

(TR42/TR70/TR82/TR550)
(Ref. No. 5,000 Series)

< CAPACITOR >

Ref. No.	Part No.	Description				Remark
C402	1-165-176-11	CERAMIC CHIP	0.047uF	10%	16V	
C403	1-164-004-11	CERAMIC CHIP	0.1uF	10%	25V	
C404	1-164-004-11	CERAMIC CHIP	0.1uF	10%	25V	
C405	1-164-677-11	CERAMIC CHIP	0.033uF	10%	16V	
C407	1-162-957-11	CERAMIC CHIP	220PF	5%	50V	
C408	1-164-232-11	CERAMIC CHIP	0.01uF		50V	
C409	1-162-970-11	CERAMIC CHIP	0.01uF	10%	25V	
C411	1-126-205-11	ELECT CHIP	47uF	20%	6.3V	
C412	1-126-206-11	ELECT CHIP	47uF	20%	6.3V	
C413	1-126-209-11	ELECT	100uF	20%	4V	
C414	1-128-006-11	ELECT CHIP	4.7uF	20%	25V	
C415	1-128-004-11	ELECT CHIP	10uF	20%	16V	
C416	1-162-951-11	CERAMIC CHIP	68PF	5%	50V	
C418	1-164-004-11	CERAMIC CHIP	0.1uF	10%	25V	
C419	1-162-967-11	CERAMIC CHIP	0.0033uF	10%	50V	
C421	1-162-974-11	CERAMIC CHIP	0.01uF		50V	
C422	1-164-874-11	CERAMIC CHIP	1800PF	5%	16V	
C423	1-164-471-11	CERAMIC CHIP	680PF	5%	50V	
C424	1-162-949-11	CERAMIC CHIP	47PF	5%	50V	
C425	1-164-346-11	CERAMIC CHIP	1uF		16V	

Ref. No.	Part No.	Description			Remark
C426	1-162-957-11	CERAMIC CHIP	220PF	5%	50V
C428	1-128-006-11	ELECT CHIP	4.7uF	20%	25V
C429	1-128-013-11	ELECT CHIP	1uF	20%	50V
C430	1-128-004-11	ELECT CHIP	10uF	20%	16V
C431	1-162-969-11	CERAMIC CHIP	0.0068uF	10%	25V
C432	1-164-674-11	CERAMIC CHIP	1800PF	5%	16V
C433	1-164-346-11	CERAMIC CHIP	1uF		16V
C434	1-128-003-11	ELECT CHIP	22uF	20%	4V
C435	1-162-966-11	CERAMIC CHIP	0.0022uF	10%	50V
C436	1-126-205-11	ELECT CHIP	47uF	20%	6.3V
C437	1-126-205-11	ELECT CHIP	47uF	20%	6.3V
C438	1-164-004-11	CERAMIC CHIP	0.1uF	10%	25V
C439	1-128-004-11	ELECT CHIP	10uF	20%	16V
C440	1-162-974-11	CERAMIC CHIP	0.01uF		50V
C441	1-126-205-11	ELECT CHIP	47uF	20%	6.3V
C442	1-162-974-11	CERAMIC CHIP	0.01uF		50V
		< CONNECTOR >			
CN401	1-691-516-11	CONNECTOR, BOARD TO BOARD 24P			
CN402	1-691-487-21	CONNECTOR, FFC/FPC 8P			
		< DIODE >			
D402	8-719-045-87	DIODE MA4Z082WA-TX			
		< IC >			
IC401	8-759-823-19	IC CXA1488RR			
		< COIL >			
L401	1-412-954-11	INDUCTOR 18uH			
		< TRANSISTOR >			
Q402	8-729-230-63	TRANSISTOR 2SC4116			
Q403	8-729-230-63	TRANSISTOR 2SC4116			
Q404	8-729-402-81	TRANSISTOR XN4501			
Q405	8-729-402-42	TRANSISTOR UN5213			
Q406	8-729-403-35	TRANSISTOR UN5113			
		< RESISTOR >			
R401	1-216-849-11	METAL CHIP	220K	5%	1/16W
R402	1-216-864-11	METAL CHIP	0	5%	1/16W
R403	1-216-859-11	METAL GLAZE	1.5M	5%	1/16W
R404	1-216-851-11	METAL CHIP	330K	5%	1/16W
R407	1-216-837-11	METAL CHIP	22K	5%	1/16W
R409	1-216-833-11	METAL CHIP	10K	5%	1/16W
R410	1-216-840-11	METAL CHIP	39K	5%	1/16W
R411	1-216-833-11	METAL CHIP	10K	5%	1/16W
R412	1-216-821-11	METAL CHIP	1K	5%	1/16W
R413	1-216-835-11	METAL CHIP	15K	5%	1/16W
R415	1-216-849-11	METAL CHIP	220K	5%	1/16W
R416	1-216-829-11	METAL CHIP	4.7K	5%	1/16W
R417	1-216-829-11	METAL CHIP	4.7K	5%	1/16W
R418	1-216-851-11	METAL CHIP	330K	5%	1/16W
R419	1-216-829-11	METAL CHIP	4.7K	5%	1/16W
R420	1-216-832-11	METAL CHIP	8.2K	5%	1/16W
R421	1-216-864-11	METAL CHIP	0	5%	1/16W
R423	1-216-839-11	METAL CHIP	33K	5%	1/16W
R424	1-216-833-11	METAL CHIP	10K	5%	1/16W
R425	1-216-810-11	METAL CHIP	120	5%	1/16W
R427	1-216-817-11	METAL CHIP	470	5%	1/16W
R428	1-216-833-11	METAL CHIP	10K	5%	1/16W
R429	1-216-827-11	METAL CHIP	3.3K	5%	1/16W
R430	1-216-841-11	METAL CHIP	47K	5%	1/16W
R431	1-216-823-11	METAL CHIP	1.5K	5%	1/16W
R432	1-216-825-11	METAL CHIP	2.2K	5%	1/16W
R433	1-216-817-11	METAL CHIP	470	5%	1/16W
R434	1-216-821-11	METAL CHIP	1K	5%	1/16W
R435	1-216-836-11	METAL CHIP	18K	5%	1/16W
R436	1-216-837-11	METAL CHIP	22K	5%	1/16W

****

* A-7063-960-A DD-60 BOARD, COMPLETE
****
(TR72/TR400/TR430/TR750)

* A-7066-009-A DD-60 BOARD, COMPLETE (TR80)
****

* A-7063-954-A DD-66 BOARD, COMPLETE (TR42/TR82/TR550)
****

* A-7066-006-A DD-66 BOARD, COMPLETE (TR70)
****
(Ref. No. 9,000 Series)

< CAPACITOR >

C901	1-163-989-11	CERAMIC CHIP	0.033uF	10%	25V
C902	1-164-004-11	CERAMIC CHIP	0.1uF	10%	25V
C903	1-163-121-00	CERAMIC CHIP	150PF	5%	50V
C904	1-163-121-00	CERAMIC CHIP	150PF	5%	50V
C906	1-164-245-11	CERAMIC CHIP	0.015uF	10%	25V
C907	1-162-963-11	CERAMIC CHIP	680PF	10%	50V
C908	1-162-963-11	CERAMIC CHIP	680PF	10%	50V
C909	1-162-963-11	CERAMIC CHIP	680PF	10%	50V
C910	1-162-964-11	CERAMIC CHIP	0.001uF	10%	50V
C911	1-162-963-11	CERAMIC CHIP	680PF	10%	50V
C912	1-128-530-11	ELECT CHIP	33uF	20%	10V
C913	1-128-004-11	ELECT CHIP	10uF	20%	16V
C914	1-128-004-11	ELECT CHIP	10uF	20%	16V
C915	1-165-178-11	CERAMIC CHIP	6.8uF		16V
C916	1-128-004-11	ELECT CHIP	10uF	20%	16V
C917	1-165-178-11	CERAMIC CHIP	6.8uF		16V

Ref. No.	Part No.	Description			Remark
C428	1-162-957-11	CERAMIC CHIP	22PF	5%	50V
C429	1-126-009-11	ELECT CHIP	4.7uF	20%	25V
C429	1-126-018-11	ELECT CHIP	1uF	20%	50V
C430	1-123-004-11	ELECT CHIP	10uF	20%	16V
C431	1-162-969-11	CERAMIC CHIP	0.0068uF	10%	25V
C432	1-164-674-11	CERAMIC CHIP	1800PF	5%	16V
C433	1-164-346-11	CERAMIC CHIP	1uF		16V
C434	1-123-003-11	ELECT CHIP	22uF	20%	4V
C435	1-163-968-11	CERAMIC CHIP	0.0022uF	10%	50V
C436	1-126-205-11	ELECT CHIP	47uF	20%	6.3V
C437	1-126-206-11	ELECT CHIP	47uF	20%	6.3V
C438	1-164-004-11	CERAMIC CHIP	0.1uF	10%	25V
C439	1-123-004-11	ELECT CHIP	10uF	20%	16V
C440	1-162-974-11	CERAMIC CHIP	0.01uF		50V
C441	1-126-205-11	ELECT CHIP	47uF	20%	6.3V
C442	1-162-974-11	CERAMIC CHIP	0.01uF		50V
		< CONNECTOR >			
CN401	1-691-516-11	CONNECTOR, BOARD TO BOARD 24P			
CN402	1-691-487-21	CONNECTOR, FPC/FFC 8P			
		< DIODE >			
D402	8-719-045-87	DIODE MA4200SWA-TX			
		< IC >			
IC401	8-759-833-19	IC CXA1438BR			
		< COIL >			
L401	1-412-064-11	INDUCTOR 12uH			
		< TRANSISTOR >			
Q402	8-729-230-63	TRANSISTOR 2SC4118			
Q403	8-729-230-63	TRANSISTOR 2SC4118			
Q404	8-729-403-81	TRANSISTOR XN4521			
Q405	8-729-402-42	TRANSISTOR UN5211			
Q406	8-729-403-35	TRANSISTOR UN5113			
		< RESISTOR >			
R401	1-216-849-11	METAL CHIP	220K	5%	1/16W
R402	1-216-864-11	METAL CHIP	0	5%	1/16W
R403	1-216-859-11	METAL GLAZE	1.5M	5%	1/16W
R404	1-216-851-11	METAL CHIP	330K	5%	1/16W
R407	1-216-837-11	METAL CHIP	22K	5%	1/16W
R409	1-216-833-11	METAL CHIP	10K	5%	1/16W
R410	1-216-840-11	METAL CHIP	39K	5%	1/16W
R411	1-216-833-11	METAL CHIP	10K	5%	1/16W
R412	1-216-821-11	METAL CHIP	1K	5%	1/16W
R413	1-216-835-11	METAL CHIP	15K	5%	1/16W
R415	1-216-849-11	METAL CHIP	220K	5%	1/16W
R416	1-216-829-11	METAL CHIP	4.7K	5%	1/16W
R417	1-216-829-11	METAL CHIP	4.7K	5%	1/16W
R418	1-216-851-11	METAL CHIP	330K	5%	1/16W
R419	1-216-829-11	METAL CHIP	4.7K	5%	1/16W
R420	1-216-833-11	METAL CHIP	8.2K	5%	1/16W
R421	1-216-864-11	METAL CHIP	0	5%	1/16W
R423	1-216-838-11	METAL CHIP	22K	5%	1/16W
R424	1-216-833-11	METAL CHIP	10K	5%	1/16W
R425	1-216-810-11	METAL CHIP	180	5%	1/16W
R427	1-216-817-11	METAL CHIP	470	5%	1/16W
R428	1-216-835-11	METAL CHIP	15K	5%	1/16W
R429	1-216-837-11	METAL CHIP	2.2K	5%	1/16W
R430	1-216-841-11	METAL CHIP	47K	5%	1/16W
R431	1-216-825-11	METAL CHIP	1.5K	5%	1/16W
R432	1-216-825-11	METAL CHIP	1.5K	5%	1/16W
R433	1-216-817-11	METAL CHIP	470	5%	1/16W
R434	1-216-821-11	METAL CHIP	1K	5%	1/16W
R435	1-216-835-11	METAL CHIP	15K	5%	1/16W
R436	1-216-837-11	METAL CHIP	22K	5%	1/16W

++

*	A-7068-980-A	DD-60 BOARD, COMPLETE	
		**********	
			(TR72/TR400/TR430/TR760)
*	A-7068-009-A	DD-60 BOARD, COMPLETE (TR80)	
		**********	
*	A-7068-964-A	DD-60 BOARD, COMPLETE (TR42/TR82/TR660)	
		**********	
*	A-7066-006-A	DD-66 BOARD, COMPLETE (TR70)	
		**********	
			(Ref. No. 9,000 Series)

< CAPACITOR >

C901	1-163-989-11	CERAMIC CHIP	0.033uF	10%	25V
C902	1-164-004-11	CERAMIC CHIP	0.1uF	10%	25V
C903	1-163-121-00	CERAMIC CHIP	150PF	5%	50V
C904	1-163-121-00	CERAMIC CHIP	150PF	5%	50V
C905	1-164-245-11	CERAMIC CHIP	0.015uF	10%	25V
C907	1-162-963-11	CERAMIC CHIP	680PF	10%	50V
C908	1-162-963-11	CERAMIC CHIP	680PF	10%	50V
C909	1-162-963-11	CERAMIC CHIP	680PF	10%	50V
C910	1-162-964-11	CERAMIC CHIP	0.001uF	10%	50V
C911	1-162-963-11	CERAMIC CHIP	680PF	10%	50V
C912	1-123-830-11	ELECT CHIP	33uF	20%	10V
C913	1-123-004-11	ELECT CHIP	10uF	20%	16V
C914	1-123-004-11	ELECT CHIP	10uF	20%	16V
C915	1-165-178-11	CERAMIC CHIP	6.8uF		16V
C916	1-123-004-11	ELECT CHIP	10uF	20%	16V
C917	1-165-178-11	CERAMIC CHIP	6.8uF		16V

Ref. No.	Part No.	Description			Remark
C918	1-165-178-11	CERAMIC CHIP	6.8uF		16V
C920	1-165-178-11	CERAMIC CHIP	6.8uF		16V
C921	1-165-178-11	CERAMIC CHIP	6.8uF		16V
C923	1-165-178-11	CERAMIC CHIP	6.8uF		16V
C924	1-165-178-11	CERAMIC CHIP	6.8uF		16V
C925	1-164-337-11	CERAMIC CHIP	2.2uF		16V
C926	1-164-337-11	CERAMIC CHIP	2.2uF		16V
C927	1-165-178-11	CERAMIC CHIP	6.8uF		16V
C928	1-165-178-11	CERAMIC CHIP	6.8uF		16V
C929	1-135-216-11	TANTALUM CHIP	10uF	20%	10V
C930	1-107-418-11	ELECT CHIP	10uF	20%	35V
C931	1-128-004-11	ELECT CHIP	10uF	20%	16V
C932	1-128-004-11	ELECT CHIP	10uF	20%	16V
C934	1-128-004-11	ELECT CHIP	10uF	20%	16V
C935	1-128-004-11	ELECT CHIP	10uF	20%	16V
C936	1-128-004-11	ELECT CHIP	10uF	20%	16V
C937	1-128-004-11	ELECT CHIP	10uF	20%	16V
C938	1-128-004-11	ELECT CHIP	10uF	20%	16V
C939	1-163-023-00	CERAMIC CHIP	0.015uF	5%	50V
C940	1-163-023-00	CERAMIC CHIP	0.015uF	5%	50V
C941	1-163-019-00	CERAMIC CHIP	0.0068uF	10%	50V
C942	1-163-009-11	CERAMIC CHIP	0.001uF	10%	50V
C943	1-163-019-00	CERAMIC CHIP	0.0068uF	10%	50V
C944	1-164-161-11	CERAMIC CHIP	0.0022uF	10%	100V
C945	1-128-530-11	ELECT CHIP	33uF	20%	10V
C950	1-128-004-11	ELECT CHIP	10uF	20%	16V

< CONNECTOR >

CN901	1-695-324-11	CONNECTOR, BOARD TO BOARD 42P

< DIODE >

D900	8-719-045-87	DIODE MA4Z082WA
D901	8-719-027-77	DIODE MA796
D902	8-719-045-87	DIODE MA4Z082WA (TR72/TR80/TR400/TR430/TR750)
D909	8-719-404-49	DIODE MA111
D910	8-719-404-49	DIODE MA111

< FUSE >

⚠F450	1-576-213-11	FUSE, CHIP (1.6A 125V)
⚠F451	1-576-213-11	FUSE, CHIP (1.6A 125V)
⚠F452	1-576-213-11	FUSE, CHIP (1.6A 125V)

< IC >

IC901	8-759-249-14	IC MB3799-02PFV-GBND-ER

< JACK >

J901	1-537-281-41	TERMINAL BOARD (BATTERY)
J902	1-565-276-21	JACK, ULTRA SMALL 1P (REMOTE)
J903	1-568-027-11	JACK, SMALL TYPE 1P (EARPHONE) (TR42/TR70/TR82/TR550)
J903	1-569-809-11	JACK (SMALL TYPE) (HEADPHONES) (TR72/TR80/TR400/TR430/TR750)

< COIL >

L901	1-424-653-11	COIL, CHOKE 10uH
L902	1-424-653-11	COIL, CHOKE 10uH
L903	1-424-653-11	COIL, CHOKE 10uH
L904	1-409-556-11	COIL, CHOKE 47uH
L905	1-424-674-11	COIL, CHOKE 22uH
L906	1-409-556-11	COIL, CHOKE 47uH
L907	1-424-674-11	COIL, CHOKE 22uH
L908	1-424-674-11	COIL, CHOKE 22uH
L909	1-412-056-11	INDUCTOR CHIP 4.7uH
L910	1-412-056-11	INDUCTOR CHIP 4.7uH
L911	1-412-056-11	INDUCTOR CHIP 4.7uH
L912	1-412-056-11	INDUCTOR CHIP 4.7uH
L913	1-412-056-11	INDUCTOR CHIP 4.7uH
L914	1-412-064-11	INDUCTOR CHIP 100uH
L915	1-412-064-11	INDUCTOR CHIP 100uH
L916	1-412-056-11	INDUCTOR CHIP 4.7uH
L917	1-412-056-11	INDUCTOR CHIP 4.7uH

< TRANSISTOR >

Q900	8-729-421-90	TRANSISTOR XN4113 (TR70/TR80)
Q901	8-729-420-12	TRANSISTOR XN4213
Q902	8-729-804-41	TRANSISTOR 2SB1122
Q903	8-729-823-82	TRANSISTOR FP101
Q904	8-729-823-84	TRANSISTOR FP102
Q905	8-729-823-82	TRANSISTOR FP101
Q906	8-729-823-82	TRANSISTOR FP101
Q907	8-729-823-82	TRANSISTOR FP101
Q908	8-729-420-12	TRANSISTOR XN4213 (TR70/TR80)
Q909	8-729-805-25	TRANSISTOR 2SB1121
Q910	8-729-429-32	TRANSISTOR UN9210-QRS (TR70/TR80)
Q911	8-729-402-42	TRANSISTOR UN5213
Q912	8-729-420-24	TRANSISTOR 2SB1218A
Q914	8-729-402-42	TRANSISTOR UN5213
Q915	8-729-402-42	TRANSISTOR UN5213

< RESISTOR >

R901	1-218-872-11	METAL CHIP	11K	0.50%	1/16W
R902	1-216-833-11	METAL CHIP	10K	5%	1/16W
R903	1-216-827-11	METAL CHIP	3.3K	5%	1/16W
R904	1-216-827-11	METAL CHIP	3.3K	5%	1/16W
R905	1-216-836-11	METAL CHIP	18K	5%	1/16W
R906	1-216-827-11	METAL CHIP	3.3K	5%	1/16W
R907	1-216-035-00	METAL CHIP	270	5%	1/10W
R908	1-216-834-11	METAL CHIP	12K	5%	1/16W
R909	1-216-031-00	METAL CHIP	180	5%	1/10W

The components identified by mark ⚠ or dotted line with mark ⚠ are critical for safety. Replace only with part number specified.	Les composants identifiés par une marque ⚠ sont critiques pour la sécurité. Ne les remplacer que par une piéce portant le numéro spécifié.

Ref. No.	Part No.	Description			Remark
C818	1-165-178-11	CERAMIC CHIP	6.8pF		16V
C820	1-165-178-11	CERAMIC CHIP	6.8pF		16V
C821	1-165-178-11	CERAMIC CHIP	6.8pF		16V
C823	1-165-178-11	CERAMIC CHIP	6.8pF		16V
C824	1-165-178-11	CERAMIC CHIP	6.8pF		16V
C825	1-164-837-11	CERAMIC CHIP	2.2pF		16V
C826	1-164-837-11	CERAMIC CHIP	2.2pF		16V
C827	1-165-178-11	CERAMIC CHIP	6.8pF		16V
C828	1-165-178-11	CERAMIC CHIP	6.8pF		16V
C829	1-135-216-11	TANTALUM CHIP	10uF	20%	10V
C830	1-107-418-11	ELECT CHIP	10uF	20%	35V
C831	1-128-004-11	ELECT CHIP	10uF	20%	16V
C832	1-128-004-11	ELECT CHIP	10uF	20%	16V
C834	1-128-004-11	ELECT CHIP	10uF	20%	16V
C835	1-128-004-11	ELECT CHIP	10uF	20%	16V
C836	1-128-004-11	ELECT CHIP	10uF	20%	16V
C837	1-128-004-11	ELECT CHIP	10uF	20%	16V
C838	1-128-004-11	ELECT CHIP	10uF	20%	16V
C839	1-163-023-00	CERAMIC CHIP	0.015uF	5%	50V
C840	1-163-023-00	CERAMIC CHIP	0.015uF	5%	50V
C841	1-163-019-00	CERAMIC CHIP	0.0068uF	10%	50V
C842	1-163-009-11	CERAMIC CHIP	0.001uF	10%	50V
C843	1-163-019-00	CERAMIC CHIP	0.0068uF	10%	50V
C844	1-164-161-11	CERAMIC CHIP	0.022uF	10%	100V
C845	1-128-530-11	ELECT CHIP	33uF	20%	10V
C850	1-128-004-11	ELECT CHIP	10uF	20%	16V
		< CONNECTOR >			
CN801	1-696-324-11	CONNECTOR, BOARD TO BOARD 42P			
		< DIODE >			
D800	8-719-045-87	DIODE	MA4ZD82WA		
D801	8-719-027-77	DIODE	MA796		
D802	8-719-045-87	DIODE	MA4ZD82WA		
					(TR72/TR80/TR400/TR430/TR750)
D809	8-719-404-49	DIODE	MA111		
D810	8-719-404-49	DIODE	MA111		
		< FUSE >			
⚠F450	1-576-213-11	FUSE, CHIP (1.6A 125V)			
⚠F451	1-576-213-11	FUSE, CHIP (1.6A 125V)			
⚠F453	1-576-213-11	FUSE, CHIP (1.6A 125V)			
		< IC >			
IC901	8-759-249-14	IC	MB3789-02PFV-GEND-ER		
		< JACK >			
J801	1-537-881-41	TERMINAL BOARD (BATTERY)			
J802	1-565-878-21	JACK, ULTRA SMALL 1P (REMOTE)			

Ref. No.	Part No.	Description			Remark
J803	1-566-027-11	JACK, SMALL TYPE 1P (HEADPHONE)			
					(TR43/TR70/TR82/TR550)
J903	1-569-809-11	JACK (SMALL TYPE) (HEADPHONES)			
					(TR72/TR80/TR400/TR430/TR750)
		< COIL >			
L801	1-424-653-11	COIL, CHOKE 10uH			
L802	1-424-653-11	COIL, CHOKE 10uH			
L803	1-424-653-11	COIL, CHOKE 10uH			
L804	1-409-558-11	COIL, CHOKE 47uH			
L805	1-424-874-11	COIL, CHOKE 22uH			
L806	1-409-558-11	COIL, CHOKE 47uH			
L807	1-424-874-11	COIL, CHOKE 22uH			
L808	1-424-874-11	COIL, CHOKE 22uH			
L808	1-412-058-11	INDUCTOR CHIP 4.7uH			
L810	1-412-058-11	INDUCTOR CHIP 4.7uH			
L811	1-412-058-11	INDUCTOR CHIP 4.7uH			
L812	1-412-058-11	INDUCTOR CHIP 4.7uH			
L813	1-412-059-11	INDUCTOR CHIP 4.7uH			
L814	1-412-064-11	INDUCTOR CHIP 100uH			
L815	1-412-064-11	INDUCTOR CHIP 100uH			
L816	1-412-058-11	INDUCTOR CHIP 4.7uH			
L817	1-412-058-11	INDUCTOR CHIP 4.7uH			
		< TRANSISTOR >			
Q800	8-729-421-90	TRANSISTOR	XN4113		(TR70/TR80)
Q801	8-729-420-12	TRANSISTOR	XN4113		
Q802	8-729-804-41	TRANSISTOR	2SB1132		
Q803	8-729-823-82	TRANSISTOR	FP101		
Q804	8-729-823-84	TRANSISTOR	FP102		
Q805	8-729-823-82	TRANSISTOR	FP101		
Q806	8-729-823-82	TRANSISTOR	FP101		
Q807	8-729-823-82	TRANSISTOR	FP101		
Q808	8-729-420-12	TRANSISTOR	XN4113		(TR70/TR80)
Q809	8-729-605-25	TRANSISTOR	2SB1121		
Q810	8-729-439-52	TRANSISTOR	HN9210-QRS		(TR70/TR80)
Q811	8-729-402-42	TRANSISTOR	UN5213		
Q812	8-729-420-24	TRANSISTOR	2SB1218A		
Q814	8-729-402-43	TRANSISTOR	UN5213		
Q815	8-729-402-43	TRANSISTOR	UN5213		
		< RESISTOR >			
R801	1-216-872-11	METAL CHIP	11K	0.50%	1/16W
R802	1-216-833-11	METAL CHIP	10K	5%	1/16W
R803	1-216-837-11	METAL CHIP	3.3K	5%	1/16W
R804	1-216-837-11	METAL CHIP	3.3K	5%	1/16W
R805	1-216-838-11	METAL CHIP	18K	5%	1/16W
R806	1-216-827-11	METAL CHIP	8.2K	5%	1/16W
R807	1-216-035-00	METAL CHIP	270	5%	1/10W
R808	1-216-834-11	METAL CHIP	12K	5%	1/16W
R809	1-216-031-00	METAL CHIP	180	5%	1/10W

The components identified by mark ⚠ or dotted line with mark ⚠ are critical for safety. Replace only with part number specified.	Les composants identifiés par une marque ⚠ sont critiques pour la sécurité. Ne les remplacer que par une pièce portant le numéro spécifié.

Ref. No.	Part No.	Description				Remark
R910	1-216-029-00	METAL CHIP	150	5%	1/10W	
R911	1-216-029-00	METAL CHIP	150	5%	1/10W	
R912	1-216-029-00	METAL CHIP	150	5%	1/10W	
R913	1-216-041-00	METAL CHIP	470	5%	1/10W	
R915	1-216-864-11	METAL CHIP	0	5%	1/16W	
R918	1-216-819-11	METAL CHIP	680	5%	1/16W	
R919	1-216-836-11	METAL CHIP	18K	5%	1/16W	
R920	1-216-841-11	METAL CHIP	47K	5%	1/16W	
R921	1-412-052-21	INDUCTOR CHIP 1uH				
R922	1-216-833-11	METAL CHIP	10K	5%	1/16W	
R923	1-412-052-21	INDUCTOR CHIP 1uH				
R924	1-412-979-21	INDUCTOR 1uH				
R925	1-216-825-11	METAL CHIP	2.2K	5%	1/16W	
R926	1-216-841-11	METAL CHIP	47K	5%	1/16W	
R931	1-216-864-11	METAL CHIP	0	5%	1/16W	
R932	1-412-979-21	INDUCTOR 1uH				
R933	1-412-979-21	INDUCTOR 1uH				(TR72/TR80/TR400/TR430/TR750)
R934	1-216-864-11	METAL CHIP	0	5%	1/16W	
R936	1-412-979-21	INDUCTOR	1uH			
R937	1-216-864-11	METAL CHIP	0	5%	1/16W	(TR42/TR72/TR82/TR400/TR430/TR550/TR750)
R938	1-216-864-11	METAL CHIP	0	5%	1/16W	(TR42/TR72/TR82/TR400/TR430/TR550/TR750)
R939	1-216-864-11	METAL CHIP	0	5%	1/16W	(TR70/TR80)
R940	1-216-864-11	METAL CHIP	0	5%	1/16W	(TR42/TR72/TR82/TR400/TR430/TR550/TR750)
R941	1-218-849-11	METAL CHIP	1.2K	0.50%	1/16W	
R942	1-216-864-11	METAL CHIP	0	5%	1/16W	
R943	1-216-864-11	METAL CHIP	0	5%	1/16W	(TR70/TR80)
R944	1-216-864-11	METAL CHIP	0	5%	1/16W	(TR42/TR72/TR82/TR400/TR430/TR550/TR750)
R945	1-218-847-11	METAL CHIP	1K	0.50%	1/16W	
R946	1-216-841-11	METAL CHIP	47K	5%	1/16W	(TR70/TR80)
R947	1-216-828-11	METAL CHIP	3.9K	5%	1/16W	(TR70/TR80)
R948	1-216-837-11	METAL CHIP	22K	5%	1/16W	(TR70/TR80)
R949	1-216-841-11	METAL CHIP	47K	5%	1/16W	(TR70/TR80)
		< TRANSFORMER >				
T901	1-426-730-11	TRANSFORMER, CONVERTER				

****

Ref. No.	Part No.	Description				Remark
*	1-651-890-11	FP-49 FLEXIBLE BOARD				
		**********				(TR82/TR400/TR550/TR750) (Ref. No. 3,000 Series)
		< SENSOR >				
SE691	1-810-024-31	SENSOR, ANGULAR VELOCITY				
SE692	1-810-024-41	SENSOR, ANGULAR VELOCITY				

****

Ref. No.	Part No.	Description				Remark
*	A-7072-004-A	FP-89 (CD) BOARD, COMPLETE				
		**********				(TR82/TR400/TR550/TR750)
*	A-7072-005-A	FP-89 (CD) BOARD, COMPLETE				
		**********				(TR42/TR70/TR72/TR80/TR430) (Ref. No. 3,000 Series)
		< CAPACITOR >				
C691	1-135-214-21	TANTAL. CHIP	4.7uF	20%	20V	
C692	1-135-210-11	TANTALUM CHIP	4.7uF	20%	10V	
C694	1-164-346-11	CERAMIC CHIP	1uF		16V	
C695	1-164-156-11	CERAMIC CHIP	0.1uF		25V	
C696	1-104-908-11	TANTAL. CHIP	47uF	20%	4V	
		< IC >				
IC691	A-7030-368-A	CCD BLOCK ASSY (AUTO) (054 SERVICE) (CCD IMAGER) (TR42/TR70/TR72/TR80/TR430)				
IC691	A-7030-373-A	CCD BLOCK ASSY (AUTO) (059V SERVICE) (CCD IMAGER) (TR82/TR400/TR550/TR750)				
		< COIL >				
L691	1-412-963-11	INDUCTOR 100uH				
		< TRANSISTOR >				
Q691	8-729-232-86	TRANSISTOR	2SK1875-BL/V			
Q692	8-729-117-73	TRANSISTOR	2SC4178-F14			
		< RESISTOR >				
R691	1-216-295-00	METAL CHIP	0	5%	1/10W	
R692	1-216-829-11	METAL CHIP	4.7K	5%	1/16W	
R693	1-216-839-11	METAL CHIP	33K	5%	1/16W	(TR42/TR70/TR72/TR80/TR430)
R693	1-216-840-11	METAL CHIP	39K	5%	1/16W	(TR82/TR400/TR550/TR750)
R694	1-216-819-11	METAL CHIP	680	5%	1/16W	(TR42/TR70/TR72/TR80/TR430)
R694	1-216-820-11	METAL CHIP	820	5%	1/16W	(TR82/TR400/TR550/TR750)
R695	1-216-845-11	METAL CHIP	100K	5%	1/16W	(TR82/TR400/TR550/TR750)

Be sure to read "Note on the CCD Imager replacement" on page 4-6 when changing the CCD imager.

Ref. No.	Part No.	Description				Remark
R910	1-216-029-00	METAL CHIP	150	5%	1/10W	
R911	1-216-029-00	METAL CHIP	150	5%	1/10W	
R912	1-216-029-00	METAL CHIP	150	5%	1/10W	
R913	1-216-041-00	METAL CHIP	470	5%	1/10W	
R915	1-216-864-11	METAL CHIP	0	5%	1/16W	
R916	1-216-819-11	METAL CHIP	680	5%	1/16W	
R919	1-216-836-11	METAL CHIP	10K	5%	1/16W	
R920	1-216-841-11	METAL CHIP	47K	5%	1/16W	
R921	1-412-052-21	INDUCTOR CHIP 1uH				
R922	1-216-833-11	METAL CHIP	15K	5%	1/16W	
R923	1-412-052-21	INDUCTOR CHIP 1uH				
R924	1-412-979-21	INDUCTOR 1uH				
R925	1-216-825-11	METAL CHIP	2.2K	5%	1/16W	
R926	1-216-841-11	METAL CHIP	47K	5%	1/16W	
R931	1-216-864-11	METAL CHIP	0	5%	1/16W	
R932	1-412-979-21	INDUCTOR 1uH				
R933	1-412-979-21	INDUCTOR 1uH				(TR72/TR84/TR400/TR430/TR750)
R934	1-216-864-11	METAL CHIP	0	5%	1/16W	
R936	1-412-979-21	INDUCTOR	1uH			
R937	1-216-864-11	METAL CHIP	0	5%	1/16W	(TR42/TR72/TR82/TR400/TR430/TR550/TR750)
R938	1-216-864-11	METAL CHIP	0	5%	1/16W	(TR42/TR72/TR82/TR400/TR430/TR550/TR750)
R939	1-216-864-11	METAL CHIP	0	5%	1/16W	(TR70/TR80)
R940	1-216-864-11	METAL CHIP	0	5%	1/16W	(TR42/TR72/TR82/TR400/TR430/TR550/TR750)
R941	1-218-849-11	METAL CHIP	1.8K	0.50%	1/16W	
R942	1-216-864-11	METAL CHIP	0	5%	1/16W	
R943	1-216-864-11	METAL CHIP	0	5%	1/16W	(TR70/TR80)
R944	1-216-864-11	METAL CHIP	0	5%	1/16W	(TR42/TR72/TR82/TR400/TR430/TR550/TR750)
R945	1-218-847-11	METAL CHIP	1K	0.50%	1/16W	
R946	1-216-841-11	METAL CHIP	47K	5%	1/16W	(TR70/TR80)
R947	1-218-828-11	METAL CHIP	3.9K	5%	1/16W	(TR70/TR80)
R948	1-216-837-11	METAL CHIP	22K	5%	1/16W	(TR70/TR80)
R949	1-216-841-11	METAL CHIP	47K	5%	1/16W	(TR70/TR80)
		< TRANSFORMER >				
T901	1-426-730-11	TRANSFORMER, CONVERTER				

****

Ref. No.	Part No.	Description				Remark
*	1-651-880-11	FP-49 FLEXIBLE BOARD				
		**********				(TR82/TR400/TR550/TR750) (Ref. No. 8,000 Series)
		< SENSOR >				
SM801	1-810-024-81	SENSOR, ANGULAR VELOCITY				
SM802	1-810-024-41	SENSOR, ANGULAR VELOCITY				

****

Ref. No.	Part No.	Description				Remark
*	A-7072-004-A	FP-89 (CD) BOARD, COMPLETE				
		**********				(TR82/TR400/TR550/TR750)
*	A-7072-005-A	FP-89 (CD) BOARD, COMPLETE				
		**********				(TR42/TR70/TR72/TR80/TR430) (Ref. No. 3,000 Series)
		< CAPACITOR >				
C801	1-135-214-21	TANTAL CHIP	4.7uF	20%	20V	
C802	1-135-210-11	TANTALUM CHIP	4.7uF	20%	10V	
C804	1-164-246-11	CERAMIC CHIP	1uF		16V	
C805	1-164-158-11	CERAMIC CHIP	0.1uF		25V	
C806	1-104-903-11	TANTAL CHIP	47uF	20%	4V	
		< IC >				
IC501	A-7030-969-A	CCD BLOCK ASSY (AUTO)(054 SERVICE) (CCD IMAGER)(TR42/TR70/TR72/TR80/TR430)				
IC601	A-7030-978-A	CCD BLOCK ASSY (AUTO)(059V SERVICE) (CCD IMAGER)(TR82/TR400/TR550/TR750)				
		< COIL >				
L801	1-412-988-11	INDUCTOR 100uH				
		< TRANSISTOR >				
Q801	8-729-232-86	TRANSISTOR	2SK1875-BL/Y			
Q802	8-729-117-73	TRANSISTOR	2SC4176-F14			
		< RESISTOR >				
R501	1-216-295-00	METAL CHIP	0	5%	1/10W	
R502	1-216-829-11	METAL CHIP	4.7K	5%	1/16W	
R503	1-216-839-11	METAL CHIP	33K	5%	1/16W	(TR42/TR70/TR72/TR80/TR430)
R503	1-216-840-11	METAL CHIP	39K	5%	1/16W	(TR82/TR400/TR550/TR750)
R504	1-216-819-11	METAL CHIP	680	5%	1/16W	(TR42/TR70/TR72/TR80/TR430)
R504	1-216-820-11	METAL CHIP	820	5%	1/16W	(TR82/TR400/TR550/TR750)
R506	1-216-845-11	METAL CHIP	100K	5%	1/16W	(TR82/TR400/TR550/TR750)

Be sure to read "Note on the CCD imager replacement" on page 4-8 when changing the CCD imager.

Ref. No.	Part No.	Description				Remark
R695	1-216-849-11	METAL CHIP	220K	5%	1/16W	
			(TR42/TR70/TR72/TR80/TR430)			
R696	1-216-809-11	METAL CHIP	100	5%	1/16W	
R697	1-216-833-11	METAL CHIP	10K	5%	1/16W	

****

* A-7066-078-A HE-14 BOARD, COMPLETE (TR400/TR750)
****
(Ref. No. 20,000 Series)

< CAPACITOR >

Ref. No.	Part No.	Description				Remark
C1101	1-162-917-11	CERAMIC CHIP	15PF	5%	50V	
C1102	1-162-918-11	CERAMIC CHIP	18PF	5%	50V	
C1103	1-162-917-11	CERAMIC CHIP	15PF	5%	50V	
C1104	1-162-918-11	CERAMIC CHIP	18PF	5%	50V	
C1106	1-162-919-11	CERAMIC CHIP	22PF	5%	50V	
C1107	1-162-975-11	CERAMIC CHIP	24PF	5%	50V	
C1108	1-162-923-11	CERAMIC CHIP	47PF	5%	50V	
C1109	1-162-928-11	CERAMIC CHIP	120PF	5%	50V	
C1110	1-162-910-11	CERAMIC CHIP	5PF	0.25PF	50V	
C1111	1-162-974-11	CERAMIC CHIP	0.01uF		50V	
C1112	1-162-970-11	CERAMIC CHIP	0.01uF	10%	25V	
C1113	1-164-005-11	CERAMIC CHIP	0.47uF		25V	
C1114	1-162-970-11	CERAMIC CHIP	0.01uF	10%	25V	
C1115	1-162-970-11	CERAMIC CHIP	0.01uF	10%	25V	
C1116	1-162-970-11	CERAMIC CHIP	0.01uF	10%	25V	
C1117	1-162-970-11	CERAMIC CHIP	0.01uF	10%	25V	
C1118	1-162-970-11	CERAMIC CHIP	0.01uF	10%	25V	
C1119	1-162-919-11	CERAMIC CHIP	22PF	5%	50V	
C1121	1-162-970-11	CERAMIC CHIP	0.01uF	10%	25V	
C1122	1-164-218-11	CERAMIC CHIP	180PF	0.25PF	50V	
C1123	1-164-005-11	CERAMIC CHIP	0.47uF		25V	
C1124	1-162-925-11	CERAMIC CHIP	68PF	5%	50V	
C1125	1-162-970-11	CERAMIC CHIP	0.01uF	10%	25V	
C1126	1-162-925-11	CERAMIC CHIP	68PF	5%	50V	
C1127	1-162-910-11	CERAMIC CHIP	5PF	0.25PF	50V	
C1128	1-162-970-11	CERAMIC CHIP	0.01uF	10%	25V	
C1129	1-162-925-11	CERAMIC CHIP	68PF	5%	50V	
C1130	1-162-974-11	CERAMIC CHIP	0.01uF		50V	
C1131	1-162-974-11	CERAMIC CHIP	0.01uF		50V	
C1132	1-162-970-11	CERAMIC CHIP	0.01uF	10%	25V	
C1133	1-162-919-11	CERAMIC CHIP	22PF	5%	50V	
C1134	1-162-974-11	CERAMIC CHIP	0.01uF		50V	
C1135	1-162-970-11	CERAMIC CHIP	0.01uF	10%	25V	
C1136	1-135-259-11	TANTAL. CHIP	10uF	20%	6.3V	
C1137	1-162-974-11	CERAMIC CHIP	0.01uF		50V	
C1138	1-162-970-11	CERAMIC CHIP	0.01uF	10%	25V	
C1140	1-162-974-11	CERAMIC CHIP	0.01uF		50V	
C1141	1-162-974-11	CERAMIC CHIP	0.01uF		50V	
C1142	1-164-392-11	CERAMIC CHIP	390PF	5%	50V	
C1143	1-162-912-11	CERAMIC CHIP	7PF	0.5PF	50V	
C1144	1-162-918-11	CERAMIC CHIP	18PF	5%	50V	
C1146	1-135-259-11	TANTAL. CHIP	10uF	20%	6.3V	
C1150	1-162-913-11	CERAMIC CHIP	8PF	0.5PF	50V	
C1151	1-162-917-11	CERAMIC CHIP	15PF	5%	50V	
C1152	1-162-970-11	CERAMIC CHIP	0.01uF	10%	25V	
C1155	1-135-259-11	TANTAL. CHIP	10uF	20%	6.3V	
C1156	1-164-360-11	CERAMIC CHIP	0.1uF		16V	
C1157	1-135-259-11	TANTAL. CHIP	10uF	20%	6.3V	
C1158	1-162-922-11	CERAMIC CHIP	39PF	5%	50V	
C1160	1-164-360-11	CERAMIC CHIP	0.1uF		16V	
C1161	1-164-218-11	CERAMIC CHIP	180PF	0.25PF	50V	
C1162	1-162-949-11	CERAMIC CHIP	47PF	5%	50V	
C1163	1-162-941-11	CERAMIC CHIP	10PF	0.5PF	50V	
C1164	1-135-259-11	TANTAL. CHIP	10uF	20%	6.3V	
C1165	1-135-181-21	TANTALUM CHIP	4.7uF	20%	6.3V	
C1166	1-162-957-11	CERAMIC CHIP	220PF	5%	50V	
C1167	1-135-259-11	TANTAL. CHIP	10uF	20%	6.3V	
C1168	1-162-959-11	CERAMIC CHIP	330PF	5%	50V	
C1169	1-164-155-11	CERAMIC CHIP	75PF	5%	50V	
C1171	1-162-974-11	CERAMIC CHIP	0.01uF		50V	
C1173	1-162-952-11	CERAMIC CHIP	82PF	5%	50V	
C1175	1-162-955-11	CERAMIC CHIP	150PF	5%	50V	
C1176	1-162-949-11	CERAMIC CHIP	47PF	5%	50V	
C1178	1-162-957-11	CERAMIC CHIP	220PF	5%	50V	
C1179	1-162-943-11	CERAMIC CHIP	15PF	5%	50V	
C1181	1-164-218-11	CERAMIC CHIP	180PF	0.25PF	50V	
C1182	1-162-955-11	CERAMIC CHIP	150PF	5%	50V	
C1183	1-135-259-11	TANTAL. CHIP	10uF	20%	6.3V	
C1184	1-135-259-11	TANTAL. CHIP	10uF	20%	6.3V	
C1185	1-164-149-11	CERAMIC CHIP	36PF	5%	50V	
C1188	1-135-259-11	TANTAL. CHIP	10uF	20%	6.3V	
C1189	1-135-259-11	TANTAL. CHIP	10uF	20%	6.3V	
C1192	1-164-360-11	CERAMIC CHIP	0.1uF		16V	
C1193	1-164-218-11	CERAMIC CHIP	180PF	0.25PF	50V	

< CONNECTOR >

Ref. No.	Part No.	Description	Remark
* CN1101	1-573-341-11	CONNECTOR, BOARD TO BOARD 26P	

< DIODE >

Ref. No.	Part No.	Description	Remark
D1101	8-719-404-49	DIODE MA111	
D1102	8-719-027-48	DIODE MA142WA	
D1103	8-719-027-48	DIODE MA142WA	
D1105	8-719-404-49	DIODE MA111	

< FILTER >

Ref. No.	Part No.	Description	Remark
FL1101	1-236-775-11	FILTER, LOW PASS (DEM)	
FL1102	1-239-112-21	FILTER, LOW PASS (Y)	

< IC >

Ref. No.	Part No.	Description	Remark
IC1101	8-752-058-02	IC CXA1509AR	

Ref. No.	Part No.	Description			Remark
R896	1-216-849-11	METAL CHIP	220K	5%	1/16W
		(TR62/TR70/TR72/TR80/TR420)			
R898	1-216-809-11	METAL CHIP	100	5%	1/16W
R897	1-216-833-11	METAL CHIP	10K	5%	1/16W

****

* A-7066-078-A HE-14 BOARD, COMPLETE (TR400/TR760)

****

(Ref. No. 20,000 Series)

< CAPACITOR >

Ref. No.	Part No.	Description			Remark
C1101	1-162-917-11	CERAMIC CHIP	15PF	5%	50V
C1102	1-162-918-11	CERAMIC CHIP	18PF	5%	50V
C1103	1-162-917-11	CERAMIC CHIP	15PF	5%	50V
C1104	1-162-918-11	CERAMIC CHIP	18PF	5%	50V
C1106	1-162-919-11	CERAMIC CHIP	22PF	5%	50V
C1107	1-162-975-11	CERAMIC CHIP	24PF	5%	50V
C1108	1-162-923-11	CERAMIC CHIP	47PF	5%	50V
C1109	1-162-928-11	CERAMIC CHIP	120PF	5%	50V
C1110	1-162-910-11	CERAMIC CHIP	5PF	0.25PF	50V
C1111	1-162-974-11	CERAMIC CHIP	0.01uF		50V
C1112	1-162-970-11	CERAMIC CHIP	0.01uF	10%	25V
C1113	1-164-005-11	CERAMIC CHIP	0.47uF		25V
C1114	1-162-970-11	CERAMIC CHIP	0.01uF	10%	25V
C1115	1-162-970-11	CERAMIC CHIP	0.01uF	10%	25V
C1116	1-162-970-11	CERAMIC CHIP	0.01uF	10%	25V
C1117	1-162-970-11	CERAMIC CHIP	0.01uF	10%	25V
C1118	1-162-970-11	CERAMIC CHIP	0.01uF	10%	25V
C1119	1-162-919-11	CERAMIC CHIP	22PF	5%	50V
C1121	1-162-970-11	CERAMIC CHIP	0.01uF	10%	25V
C1122	1-164-218-11	CERAMIC CHIP	180PF	0.25PF	50V
C1123	1-164-005-11	CERAMIC CHIP	0.47uF		25V
C1124	1-162-925-11	CERAMIC CHIP	68PF	5%	50V
C1125	1-162-970-11	CERAMIC CHIP	0.01uF	10%	25V
C1126	1-162-925-11	CERAMIC CHIP	68PF	5%	50V
C1127	1-162-910-11	CERAMIC CHIP	5PF	0.25PF	50V
C1128	1-162-970-11	CERAMIC CHIP	0.01uF	10%	25V
C1129	1-162-925-11	CERAMIC CHIP	68PF	5%	50V
C1130	1-162-974-11	CERAMIC CHIP	0.01uF		50V
C1131	1-162-974-11	CERAMIC CHIP	0.01uF		50V
C1132	1-162-970-11	CERAMIC CHIP	0.01uF	10%	25V
C1133	1-162-919-11	CERAMIC CHIP	22PF	5%	50V
C1134	1-162-974-11	CERAMIC CHIP	0.01uF		50V
C1135	1-162-970-11	CERAMIC CHIP	0.01uF	10%	25V
C1136	1-135-259-11	TANTAL. CHIP	10uF	20%	6.3V
C1137	1-162-974-11	CERAMIC CHIP	0.01uF		50V
C1138	1-162-970-11	CERAMIC CHIP	0.01uF	10%	25V
C1140	1-162-974-11	CERAMIC CHIP	0.01uF		50V
C1141	1-162-974-11	CERAMIC CHIP	0.01uF		50V
C1142	1-164-868-11	CERAMIC CHIP	390PF	5%	50V
C1143	1-162-912-11	CERAMIC CHIP	7PF	0.5PF	50V
C1144	1-162-918-11	CERAMIC CHIP	18PF	5%	50V
C1146	1-135-259-11	TANTAL. CHIP	10uF	20%	6.3V
C1150	1-162-913-11	CERAMIC CHIP	8PF	0.5PF	50V
C1151	1-162-917-11	CERAMIC CHIP	15PF	5%	50V
C1153	1-162-970-11	CERAMIC CHIP	0.01uF	10%	25V
C1155	1-135-259-11	TANTAL. CHIP	10uF	20%	6.3V
C1156	1-164-360-11	CERAMIC CHIP	0.1uF		16V
C1157	1-135-259-11	TANTAL. CHIP	10uF	20%	6.3V
C1158	1-162-922-11	CERAMIC CHIP	39PF	5%	50V.
C1160	1-164-360-11	CERAMIC CHIP	0.1uF		16V
C1161	1-164-218-11	CERAMIC CHIP	180PF	0.25PF	50V
C1162	1-162-949-11	CERAMIC CHIP	47PF	5%	50V
C1163	1-162-941-11	CERAMIC CHIP	10PF	0.5PF	50V
C1164	1-135-259-11	TANTAL. CHIP	10uF	20%	6.3V
C1165	1-135-181-21	TANTALUM CHIP	4.7uF	20%	6.3V
C1166	1-162-967-11	CERAMIC CHIP	220PF	5%	50V
C1167	1-135-259-11	TANTAL. CHIP	10uF	20%	6.3V
C1168	1-162-969-11	CERAMIC CHIP	330PF	5%	50V
C1169	1-164-155-11	CERAMIC CHIP	75PF	5%	50V
C1171	1-162-974-11	CERAMIC CHIP	0.01uF		50V
C1173	1-162-958-11	CERAMIC CHIP	82PF	5%	50V
C1175	1-162-965-11	CERAMIC CHIP	150PF	5%	50V
C1176	1-162-949-11	CERAMIC CHIP	47PF	5%	50V
C1178	1-162-967-11	CERAMIC CHIP	220PF	5%	50V
C1179	1-162-943-11	CERAMIC CHIP	15PF	5%	50V
C1181	1-164-218-11	CERAMIC CHIP	180PF	0.25PF	50V
C1182	1-162-965-11	CERAMIC CHIP	150PF	5%	50V
C1183	1-135-259-11	TANTAL. CHIP	10uF	20%	6.3V
C1184	1-135-259-11	TANTAL. CHIP	10uF	20%	6.3V
C1185	1-164-149-11	CERAMIC CHIP	36PF	5%	50V
C1188	1-135-259-11	TANTAL. CHIP	10uF	20%	6.3V
C1189	1-135-259-11	TANTAL. CHIP	10uF	20%	6.3V
C1192	1-164-360-11	CERAMIC CHIP	0.1uF		16V
C1193	1-164-218-11	CERAMIC CHIP	180PF	0.25PF	50V

< CONNECTOR >

* CN1101 1-573-241-11 CONNECTOR, BOARD TO BOARD 30P

< DIODE >

Ref. No.	Part No.	Description	
D1101	8-719-404-49	DIODE	MA111
D1102	8-719-027-48	DIODE	MA142WA
D1103	8-719-027-48	DIODE	MA142WA
D1105	8-719-404-49	DIODE	MA111

< FILTER >

Ref. No.	Part No.	Description
FL1101	1-236-715-11	FILTER, LOW PASS (CHR)
FL1102	1-239-118-21	FILTER, LOW PASS (Y)

< IC >

Ref. No.	Part No.	Description	
IC1101	8-752-058-08	IC	CXA1509AR

Ref. No.	Part No.	Description	Remark
IC1102	8-759-070-51	IC SN74HCU04ADB	
		< COIL >	
L1101	1-412-956-21	INDUCTOR 27uH	
L1102	1-412-954-11	INDUCTOR 18uH	
L1103	1-412-947-11	INDUCTOR 4.7uH	
L1104	1-412-959-11	INDUCTOR 47uH	
L1105	1-412-954-11	INDUCTOR 18uH	
L1106	1-412-945-11	INDUCTOR 3.3uH	
L1108	1-412-954-11	INDUCTOR 18uH	
L1109	1-412-948-11	INDUCTOR 5.6uH	
L1110	1-412-956-21	INDUCTOR 27uH	
L1111	1-410-655-31	INDUCTOR CHIP 120uH	
L1112	1-412-058-11	INDUCTOR CHIP 10uH	
L1113	1-412-058-11	INDUCTOR CHIP 10uH	
L1114	1-412-957-11	INDUCTOR 33uH	
L1115	1-412-952-11	INDUCTOR 12uH	
L1116	1-412-948-11	INDUCTOR 5.6uH	
L1118	1-412-953-11	INDUCTOR 15uH	
L1119	1-412-949-21	INDUCTOR 6.8uH	
L1121	1-412-947-11	INDUCTOR 4.7uH	
L1122	1-412-954-11	INDUCTOR 18uH	
L1123	1-412-949-21	INDUCTOR 6.8uH	
L1124	1-412-960-21	INDUCTOR 56uH	
		< TRANSISTOR >	
Q1102	8-729-402-42	TRANSISTOR UN5213	
Q1103	8-729-012-50	TRANSISTOR 2SC4400	
Q1107	8-729-402-42	TRANSISTOR UN5213	
Q1110	8-729-120-28	TRANSISTOR 2SC1623	
Q1111	8-729-420-24	TRANSISTOR 2SB1218A	
Q1113	8-729-012-50	TRANSISTOR 2SC4400	
Q1114	8-729-402-81	TRANSISTOR XN4501	
Q1115	8-729-012-50	TRANSISTOR 2SC4400	
Q1117	8-729-230-63	TRANSISTOR 2SC4116	
Q1118	8-729-230-63	TRANSISTOR 2SC4116	
Q1119	8-729-402-42	TRANSISTOR UN5213	
Q1120	8-729-403-35	TRANSISTOR UN5113	
Q1121	8-729-420-24	TRANSISTOR 2SB1218A	
Q1123	8-729-012-50	TRANSISTOR 2SC4400	
Q1125	8-729-420-24	TRANSISTOR 2SB1218A	
Q1126	8-729-012-50	TRANSISTOR 2SC4400	
Q1127	8-729-403-35	TRANSISTOR UN5113	
Q1128	8-729-230-63	TRANSISTOR 2SC4116	
Q1129	8-729-012-50	TRANSISTOR 2SC4400	
Q1131	8-729-824-02	TRANSISTOR 2SA1838	
Q1132	8-729-012-50	TRANSISTOR 2SC4400	
Q1133	8-729-012-50	TRANSISTOR 2SC4400	
Q1134	8-729-402-42	TRANSISTOR UN5213	
Q1137	8-729-230-63	TRANSISTOR 2SC4116	

Ref. No.	Part No.	Description	Remark
Q1138	8-729-420-24	TRANSISTOR 2SB1218A	
		< RESISTOR >	
R1101	1-216-821-11	METAL CHIP 1K 5% 1/16W	
R1102	1-216-821-11	METAL CHIP 1K 5% 1/16W	
R1103	1-216-820-11	METAL CHIP 820 5% 1/16W	
R1104	1-216-819-11	METAL CHIP 680 5% 1/16W	
R1105	1-216-817-11	METAL CHIP 470 5% 1/16W	
R1106	1-216-809-11	METAL CHIP 100 5% 1/16W	
R1107	1-216-815-11	METAL CHIP 330 5% 1/16W	
R1108	1-216-813-11	METAL CHIP 220 5% 1/16W	
R1109	1-216-813-11	METAL CHIP 220 5% 1/16W	
R1111	1-216-837-11	METAL CHIP 22K 5% 1/16W	
R1112	1-216-837-11	METAL CHIP 22K 5% 1/16W	
R1113	1-216-821-11	METAL CHIP 1K 5% 1/16W	
R1114	1-216-821-11	METAL CHIP 1K 5% 1/16W	
R1115	1-216-821-11	METAL CHIP 1K 5% 1/16W	
R1116	1-216-833-11	METAL CHIP 10K 5% 1/16W	
R1118	1-216-829-11	METAL CHIP 4.7K 5% 1/16W	
R1119	1-216-816-11	METAL CHIP 390 5% 1/16W	
R1120	1-216-827-11	METAL CHIP 3.3K 5% 1/16W	
R1123	1-216-827-11	METAL CHIP 3.3K 5% 1/16W	
R1124	1-216-826-11	METAL CHIP 2.7K 5% 1/16W	
R1125	1-216-840-11	METAL CHIP 39K 5% 1/16W	
R1127	1-216-841-11	METAL CHIP 47K 5% 1/16W	
R1128	1-216-833-11	METAL CHIP 10K 5% 1/16W	
R1130	1-216-821-11	METAL CHIP 1K 5% 1/16W	
R1131	1-216-821-11	METAL CHIP 1K 5% 1/16W	
R1132	1-216-820-11	METAL CHIP 820 5% 1/16W	
R1134	1-216-820-11	METAL CHIP 820 5% 1/16W	
R1135	1-216-814-11	METAL CHIP 270 5% 1/16W	
R1136	1-216-821-11	METAL CHIP 1K 5% 1/16W	
R1138	1-216-821-11	METAL CHIP 1K 5% 1/16W	
R1139	1-216-821-11	METAL CHIP 1K 5% 1/16W	
R1148	1-216-837-11	METAL CHIP 22K 5% 1/16W	
R1149	1-216-838-11	METAL CHIP 27K 5% 1/16W	
R1151	1-216-826-11	METAL CHIP 2.7K 5% 1/16W	
R1152	1-216-833-11	METAL CHIP 10K 5% 1/16W	
R1153	1-216-818-11	METAL CHIP 560 5% 1/16W	
R1154	1-216-821-11	METAL CHIP 1K 5% 1/16W	
R1155	1-216-817-11	METAL CHIP 470 5% 1/16W	
R1156	1-216-825-11	METAL CHIP 2.2K 5% 1/16W	
R1157	1-216-829-11	METAL CHIP 4.7K 5% 1/16W	
R1158	1-216-825-11	METAL CHIP 2.2K 5% 1/16W	
R1159	1-216-829-11	METAL CHIP 4.7K 5% 1/16W	
R1160	1-216-820-11	METAL CHIP 820 5% 1/16W	
R1161	1-216-819-11	METAL CHIP 680 5% 1/16W	
R1162	1-216-845-11	METAL CHIP 100K 5% 1/16W	
R1163	1-216-817-11	METAL CHIP 470 5% 1/16W	
R1164	1-216-829-11	METAL CHIP 4.7K 5% 1/16W	

Ref. No.	Part No.	Description	Remark
IC1102	8-759-070-61	IC SM74HC04AOB	
		< COIL >	
L1101	1-412-956-21	INDUCTOR 27nH	
L1102	1-412-954-11	INDUCTOR 18nH	
L1103	1-412-947-11	INDUCTOR 4.7nH	
L1104	1-412-959-11	INDUCTOR 47nH	
L1105	1-412-954-11	INDUCTOR 18nH	
L1106	1-412-945-11	INDUCTOR 3.9nH	
L1108	1-412-954-11	INDUCTOR 18nH	
L1109	1-412-948-11	INDUCTOR 5.6nH	
L1110	1-412-956-21	INDUCTOR 27nH	
L1111	1-410-655-31	INDUCTOR CHIP 120nH	
L1112	1-412-958-11	INDUCTOR CHIP 10nH	
L1113	1-412-958-11	INDUCTOR CHIP 10nH	
L1114	1-412-957-11	INDUCTOR 39nH	
L1115	1-412-952-11	INDUCTOR 12nH	
L1116	1-412-948-11	INDUCTOR 5.6nH	
L1118	1-412-953-11	INDUCTOR 15nH	
L1119	1-412-949-21	INDUCTOR 6.8nH	
L1121	1-412-947-11	INDUCTOR 4.7nH	
L1122	1-412-954-11	INDUCTOR 18nH	
L1123	1-412-949-21	INDUCTOR 6.8nH	
L1124	1-412-960-21	INDUCTOR 56nH	
		< TRANSISTOR >	
Q1102	8-729-402-42	TRANSISTOR UN5213	
Q1103	8-729-012-50	TRANSISTOR 2SC4400	
Q1107	8-729-402-42	TRANSISTOR UN5213	
Q1110	8-729-120-28	TRANSISTOR 2SC1623	
Q1111	8-729-420-24	TRANSISTOR 2SB1218A	
Q1113	8-729-012-50	TRANSISTOR 2SC4400	
Q1114	8-729-402-81	TRANSISTOR XN4501	
Q1115	8-729-012-50	TRANSISTOR 2SC4400	
Q1117	8-729-230-83	TRANSISTOR 2SC4116	
Q1118	8-729-230-83	TRANSISTOR 2SC4116	
Q1119	8-729-402-42	TRANSISTOR UN5213	
Q1120	8-729-403-35	TRANSISTOR UN5118	
Q1121	8-729-420-24	TRANSISTOR 2SB1218A	
Q1122	8-729-012-50	TRANSISTOR 2SC4400	
Q1125	8-729-420-24	TRANSISTOR 2SB1218A	
Q1126	8-729-012-50	TRANSISTOR 2SC4400	
Q1127	8-729-403-35	TRANSISTOR UN5118	
Q1128	8-729-230-83	TRANSISTOR 2SC4116	
Q1129	8-729-012-50	TRANSISTOR 2SC4400	
Q1131	8-729-834-02	TRANSISTOR 2SA1838	
Q1132	8-729-012-50	TRANSISTOR 2SC4400	
Q1133	8-729-012-50	TRANSISTOR 2SC4400	
Q1134	8-729-402-42	TRANSISTOR UN5213	
Q1137	8-729-230-83	TRANSISTOR 2SC4116	
Q1138	8-729-420-24	TRANSISTOR 2SB1218A	
		< RESISTOR >	
R1101	1-216-821-11	METAL CHIP 1K 5% 1/16W	
R1102	1-216-821-11	METAL CHIP 1K 5% 1/16W	
R1103	1-216-820-11	METAL CHIP 680 5% 1/16W	
R1104	1-216-819-11	METAL CHIP 680 5% 1/16W	
R1105	1-216-817-11	METAL CHIP 470 5% 1/16W	
R1106	1-216-809-11	METAL CHIP 100 5% 1/16W	
R1107	1-216-815-11	METAL CHIP 330 5% 1/16W	
R1108	1-216-813-11	METAL CHIP 220 5% 1/16W	
R1109	1-216-813-11	METAL CHIP 220 5% 1/16W	
R1111	1-216-837-11	METAL CHIP 22K 5% 1/16W	
R1112	1-216-837-11	METAL CHIP 22K 5% 1/16W	
R1113	1-216-821-11	METAL CHIP 1K 5% 1/16W	
R1114	1-216-821-11	METAL CHIP 1K 5% 1/16W	
R1115	1-216-821-11	METAL CHIP 1K 5% 1/16W	
R1116	1-216-833-11	METAL CHIP 10K 5% 1/16W	
R1118	1-216-829-11	METAL CHIP 4.7K 5% 1/16W	
R1119	1-216-816-11	METAL CHIP 390 5% 1/16W	
R1120	1-216-827-11	METAL CHIP 3.3K 5% 1/16W	
R1123	1-216-827-11	METAL CHIP 3.3K 5% 1/16W	
R1124	1-216-830-11	METAL CHIP 2.7K 5% 1/16W	
R1125	1-216-840-11	METAL CHIP 39K 5% 1/16W	
R1127	1-216-841-11	METAL CHIP 47K 5% 1/16W	
R1128	1-216-833-11	METAL CHIP 10K 5% 1/16W	
R1130	1-216-821-11	METAL CHIP 1K 5% 1/16W	
R1131	1-216-821-11	METAL CHIP 1K 5% 1/16W	
R1132	1-216-820-11	METAL CHIP 680 5% 1/16W	
R1134	1-216-820-11	METAL CHIP 680 5% 1/16W	
R1135	1-216-814-11	METAL CHIP 270 5% 1/16W	
R1136	1-216-821-11	METAL CHIP 1K 5% 1/16W	
R1138	1-216-821-11	METAL CHIP 1K 5% 1/16W	
R1139	1-216-821-11	METAL CHIP 1K 5% 1/16W	
R1140	1-216-837-11	METAL CHIP 22K 5% 1/16W	
R1149	1-216-838-11	METAL CHIP 27K 5% 1/16W	
R1151	1-216-826-11	METAL CHIP 2.7K 5% 1/16W	
R1152	1-216-833-11	METAL CHIP 10K 5% 1/16W	
R1153	1-216-818-11	METAL CHIP 560 5% 1/16W	
R1154	1-216-821-11	METAL CHIP 1K 5% 1/16W	
R1155	1-216-817-11	METAL CHIP 470 5% 1/16W	
R1156	1-216-835-11	METAL CHIP 15K 5% 1/16W	
R1157	1-216-829-11	METAL CHIP 4.7K 5% 1/16W	
R1158	1-216-826-11	METAL CHIP 2.2K 5% 1/16W	
R1159	1-216-829-11	METAL CHIP 4.7K 5% 1/16W	
R1160	1-216-820-11	METAL CHIP 680 5% 1/16W	
R1161	1-216-819-11	METAL CHIP 680 5% 1/16W	
R1162	1-216-845-11	METAL CHIP 100K 5% 1/16W	
R1163	1-216-817-11	METAL CHIP 470 5% 1/16W	
R1164	1-216-829-11	METAL CHIP 4.7K 5% 1/16W	

Ref.No.	Part No.	Description				Remark
R1165	1-216-814-11	METAL CHIP	270	5%	1/16W	
R1166	1-216-815-11	METAL CHIP	330	5%	1/16W	
R1167	1-216-864-11	METAL CHIP	0	5%	1/16W	
R1168	1-216-826-11	METAL CHIP	2.7K	5%	1/16W	
R1169	1-216-836-11	METAL CHIP	18K	5%	1/16W	
R1170	1-216-839-11	METAL CHIP	33K	5%	1/16W	
R1171	1-216-842-11	METAL CHIP	56K	5%	1/16W	
R1172	1-216-837-11	METAL CHIP	22K	5%	1/16W	
R1173	1-216-837-11	METAL CHIP	22K	5%	1/16W	
R1174	1-216-813-11	METAL CHIP	220	5%	1/16W	
R1175	1-216-813-11	METAL CHIP	220	5%	1/16W	
R1176	1-216-821-11	METAL CHIP	1K	5%	1/16W	
R1177	1-216-814-11	METAL CHIP	270	5%	1/16W	
R1178	1-216-828-11	METAL CHIP	3.9K	5%	1/16W	
R1179	1-216-833-11	METAL CHIP	10K	5%	1/16W	
R1180	1-216-864-11	METAL CHIP	0	5%	1/16W	
R1182	1-216-825-11	METAL CHIP	2.2K	5%	1/16W	
R1183	1-216-811-11	METAL CHIP	150	5%	1/16W	
R1184	1-216-819-11	METAL CHIP	680	5%	1/16W	
R1186	1-216-817-11	METAL CHIP	470	5%	1/16W	
R1187	1-216-815-11	METAL CHIP	330	5%	1/16W	
R1188	1-216-820-11	METAL CHIP	820	5%	1/16W	
R1189	1-216-864-11	METAL CHIP	0	5%	1/16W	
R1190	1-216-816-11	METAL CHIP	390	5%	1/16W	
R1191	1-216-829-11	METAL CHIP	4.7K	5%	1/16W	
R1194	1-216-819-11	METAL CHIP	680	5%	1/16W	
R1196	1-216-833-11	METAL CHIP	10K	5%	1/16W	
R1197	1-216-833-11	METAL CHIP	10K	5%	1/16W	
R1198	1-216-819-11	METAL CHIP	680	5%	1/16W	
R1199	1-216-819-11	METAL CHIP	680	5%	1/16W	
R1202	1-216-811-11	METAL CHIP	150	5%	1/16W	
R1203	1-216-833-11	METAL CHIP	10K	5%	1/16W	
R1204	1-216-815-11	METAL CHIP	330	5%	1/16W	
R1205	1-216-817-11	METAL CHIP	470	5%	1/16W	
R1206	1-216-817-11	METAL CHIP	470	5%	1/16W	
R1207	1-216-815-11	METAL CHIP	330	5%	1/16W	
R1209	1-216-864-11	METAL CHIP	0	5%	1/16W	
R1210	1-216-831-11	METAL CHIP	6.8K	5%	1/16W	
R1214	1-216-820-11	METAL CHIP	820	5%	1/16W	
R1215	1-216-819-11	METAL CHIP	680	5%	1/16W	
R1216	1-216-827-11	METAL CHIP	3.3K	5%	1/16W	
R1217	1-216-827-11	METAL CHIP	3.3K	5%	1/16W	
R1218	1-216-817-11	METAL CHIP	470	5%	1/16W	
R1219	1-216-817-11	METAL CHIP	470	5%	1/16W	
R1220	1-216-864-11	METAL CHIP	0	5%	1/16W	
R1221	1-216-864-11	METAL CHIP	0	5%	1/16W	
R1223	1-216-864-11	METAL CHIP	0	5%	1/16W	
R1226	1-216-864-11	METAL CHIP	0	5%	1/16W	

****

Ref.No.	Part No.	Description	Remark
*	A-7056-012-A	LB-35 BOARD, COMPLETE (TR70/80)	
		**********	
		(Ref. No. 4,000 Series)	
		< CONNECTOR >	
CN801	1-573-812-11	CONNECTOR, BOARD TO BOARD 12P	
		< DIODE >	
D801	8-719-037-83	DIODE LN1371G-(TR)	

****

		LS-33 BOARD	
		**********	
		< DIODE >	
D001	8-719-989-52	DIODE GL4600S	
		< HALL >	
H001	8-719-987-62	DIODE LT140SAZ	
H002	8-719-987-62	DIODE LT140SAZ	
		< TRANSISTOR >	
Q001	8-729-012-46	TRANSISTOR PT4600FS	
Q002	8-729-012-46	TRANSISTOR PT4600FS	
		< RESISTOR >	
R003	1-216-033-00	METAL CHIP 220 5% 1/10W	
R004	1-216-033-00	METAL CHIP 220 5% 1/10W	
R010	1-216-033-00	METAL CHIP 220 5% 1/10W	
R011	1-216-033-00	METAL CHIP 220 5% 1/10W	
		< SWITCH >	
S002	1-572-987-11	SWITCH, PUSH (3 KEY)	

****

*	A-7063-962-A	MA-179 BOARD, COMPLETE	
		**********	
		(TR72/TR80/TR400/TR430/TR750)	
		(Ref. No. 7,000 Series)	
		< CAPACITOR >	
C001	1-164-343-11	CERAMIC CHIP 0.056uF 10% 25V	
C003	1-163-037-11	CERAMIC CHIP 0.022uF 10% 25V	
C005	1-163-023-00	CERAMIC CHIP 0.015uF 5% 50V	
C006	1-163-037-11	CERAMIC CHIP 0.022uF 10% 25V	
C007	1-164-360-11	CERAMIC CHIP 0.1uF 16V	
C008	1-163-037-11	CERAMIC CHIP 0.022uF 10% 25V	
C009	1-164-004-11	CERAMIC CHIP 0.1uF 10% 25V	
C010	1-135-091-21	TANTAL. CHIP 1uF 20% 16V	

Ref. No.	Part No.	Description				Remark
R1165	1-216-814-11	METAL CHIP	270	5%	1/16W	
R1166	1-216-815-11	METAL CHIP	330	5%	1/16W	
R1167	1-216-864-11	METAL CHIP	0	5%	1/16W	
R1168	1-216-828-11	METAL CHIP	2.7K	5%	1/16W	
R1169	1-216-836-11	METAL CHIP	18K	5%	1/16W	
R1170	1-216-839-11	METAL CHIP	33K	5%	1/16W	
R1171	1-216-842-11	METAL CHIP	56K	5%	1/16W	
R1172	1-216-837-11	METAL CHIP	22K	5%	1/16W	
R1173	1-216-837-11	METAL CHIP	22K	5%	1/16W	
R1174	1-216-818-11	METAL CHIP	220	5%	1/16W	
R1175	1-216-818-11	METAL CHIP	220	5%	1/16W	
R1176	1-216-821-11	METAL CHIP	1K	5%	1/16W	
R1177	1-216-814-11	METAL CHIP	270	5%	1/16W	
R1178	1-216-828-11	METAL CHIP	2.9K	5%	1/16W	
R1179	1-216-833-11	METAL CHIP	10K	5%	1/16W	
R1180	1-216-864-11	METAL CHIP	0	5%	1/16W	
R1183	1-216-825-11	METAL CHIP	2.2K	5%	1/16W	
R1183	1-216-811-11	METAL CHIP	150	5%	1/16W	
R1184	1-216-819-11	METAL CHIP	680	5%	1/16W	
R1186	1-216-817-11	METAL CHIP	470	5%	1/16W	
R1187	1-216-815-11	METAL CHIP	330	5%	1/16W	
R1188	1-216-820-11	METAL CHIP	820	5%	1/16W	
R1189	1-216-864-11	METAL CHIP	0	5%	1/16W	
R1190	1-216-816-11	METAL CHIP	390	5%	1/16W	
R1191	1-216-829-11	METAL CHIP	4.7K	5%	1/16W	
R1194	1-216-819-11	METAL CHIP	680	5%	1/16W	
R1196	1-216-833-11	METAL CHIP	10K	5%	1/16W	
R1197	1-216-833-11	METAL CHIP	10K	5%	1/16W	
R1198	1-216-819-11	METAL CHIP	680	5%	1/16W	
R1199	1-216-818-11	METAL CHIP	680	5%	1/16W	
R1202	1-216-811-11	METAL CHIP	150	5%	1/16W	
R1203	1-216-833-11	METAL CHIP	10K	5%	1/16W	
R1204	1-216-815-11	METAL CHIP	330	5%	1/16W	
R1205	1-216-817-11	METAL CHIP	470	5%	1/16W	
R1206	1-216-817-11	METAL CHIP	470	5%	1/16W	
R1207	1-216-815-11	METAL CHIP	330	5%	1/16W	
R1209	1-216-864-11	METAL CHIP	0	5%	1/16W	
R1210	1-216-831-11	METAL CHIP	6.8K	5%	1/16W	
R1214	1-216-820-11	METAL CHIP	820	5%	1/16W	
R1215	1-216-819-11	METAL CHIP	680	5%	1/16W	
R1216	1-216-827-11	METAL CHIP	3.3K	5%	1/16W	
R1217	1-216-827-11	METAL CHIP	3.3K	5%	1/16W	
R1218	1-216-817-11	METAL CHIP	470	5%	1/16W	
R1219	1-216-817-11	METAL CHIP	470	5%	1/16W	
R1220	1-216-864-11	METAL CHIP	0	5%	1/16W	
R1221	1-216-864-11	METAL CHIP	0	5%	1/16W	
R1223	1-216-864-11	METAL CHIP	0	5%	1/16W	
R1224	1-216-864-11	METAL CHIP	0	5%	1/16W	

Ref. No.	Part No.	Description				Remark
*	A-7058-012-A	LB-35 BOARD, COMPLETE (TK70/80)				
		**********				
						(Ref. No. 4,000 Series)
		< CONNECTOR >				
CN801	1-573-812-11	CONNECTOR, BOARD TO BOARD 12P				
		< DIODE >				
D801	8-719-037-81	DIODE LN1371G-(TX)				
**********						
		LS-33 BOARD				
		**********				
		< DIODE >				
D001	8-719-989-63	DIODE GL4500S				
		< HALL >				
H001	8-719-987-81	DIODE LT140SAZ				
H002	8-719-987-81	DIODE LT140SAZ				
		< TRANSISTOR >				
Q001	8-729-012-46	TRANSISTOR PT4500FS				
Q002	8-729-012-46	TRANSISTOR PT4500FS				
		< RESISTOR >				
R003	1-216-033-00	METAL CHIP	220	5%	1/10W	
R004	1-216-033-00	METAL CHIP	220	5%	1/10W	
R210	1-216-033-00	METAL CHIP	220	5%	1/10W	
R211	1-216-033-00	METAL CHIP	220	5%	1/10W	
		< SWITCH >				
S002	1-572-287-11	SWITCH, PUSH (8 KEY)				
**********						
*	A-7088-862-A	MA-179 BOARD, COMPLETE				
		**********				
		(TX7X/TX80/TX400/TX430/TX750)				
						(Ref. No. 7,000 Series)
		< CAPACITOR >				
C001	1-164-843-11	CERAMIC CHIP	0.056uF	10%	25V	
C003	1-163-037-11	CERAMIC CHIP	0.022uF	10%	25V	
C005	1-163-023-00	CERAMIC CHIP	0.015uF	5%	50V	
C006	1-163-037-11	CERAMIC CHIP	0.022uF	10%	25V	
C007	1-164-960-11	CERAMIC CHIP	0.1uF		16V	
C008	1-163-037-11	CERAMIC CHIP	0.022uF	10%	25V	
C009	1-164-004-11	CERAMIC CHIP	0.1uF	10%	25V	
C010	1-135-061-21	TANTAL, CHIP	1uF	20%	16V	

Ref. No.	Part No.	Description			Remark
C011	1-164-232-11	CERAMIC CHIP	0.01uF		50V
C012	1-163-037-11	CERAMIC CHIP	0.022uF	10%	25V
C013	1-162-953-11	CERAMIC CHIP	100PF	5%	50V
C014	1-162-953-11	CERAMIC CHIP	100PF	5%	50V
C015	1-162-966-11	CERAMIC CHIP	0.0022uF	10%	50V
C019	1-164-232-11	CERAMIC CHIP	0.01uF		50V
C020	1-163-037-11	CERAMIC CHIP	0.022uF	10%	25V
C021	1-126-205-11	ELECT CHIP	47uF	20%	6.3V
C022	1-164-004-11	CERAMIC CHIP	0.1uF	10%	25V
C023	1-135-091-21	TANTAL. CHIP	1uF	20%	16V
C024	1-163-037-11	CERAMIC CHIP	0.022uF	10%	25V
C025	1-163-023-00	CERAMIC CHIP	0.015uF	5%	50V
C026	1-163-037-11	CERAMIC CHIP	0.022uF	10%	25V
C027	1-163-037-11	CERAMIC CHIP	0.022uF	10%	25V
C030	1-164-343-11	CERAMIC CHIP	0.056uF	10%	25V
C043	1-128-004-11	ELECT CHIP	10uF	20%	16V

< CONNECTOR >

CN001	1-691-490-21	CONNECTOR, FFC/FPC 11P
CN002	1-580-057-11	PIN, CONNECTOR 4P
CN003	1-580-057-11	PIN, CONNECTOR 4P

< DIODE >

D001	8-719-404-46	DIODE	MA110
D002	8-719-404-46	DIODE	MA110
D004	8-719-404-19	DIODE	LN1251C (TALLY)

< IC >

IC001	8-759-084-53	IC	CXA1618AN-E2
IC002	8-749-923-29	IC	RS-20E-T

< JACK >

J001	1-691-737-11	JACK (SMALL TYPE)(EXT MIC)

< COIL >

L001	1-412-939-11	INDUCTOR 1uH
L002	1-412-939-11	INDUCTOR 1uH
L003	1-412-939-11	INDUCTOR 1uH

< TRANSISTOR >

Q001	8-729-230-63	TRANSISTOR	2SC4116-YG
Q003	8-729-402-42	TRANSISTOR	UN5213

< RESISTOR >

Ref. No.	Part No.	Description			Remark
R003	1-216-829-11	METAL CHIP	4.7K	5%	1/16W
R004	1-216-833-11	METAL CHIP	10K	5%	1/16W
R005	1-216-821-11	METAL CHIP	1K	5%	1/16W
R006	1-216-813-11	METAL CHIP	220	5%	1/16W
R007	1-216-834-11	METAL CHIP	12K	5%	1/16W
R008	1-216-834-11	METAL CHIP	12K	5%	1/16W
R009	1-216-835-11	METAL CHIP	15K	5%	1/16W
R010	1-216-833-11	METAL CHIP	10K	5%	1/16W
R011	1-216-825-11	METAL CHIP	2.2K	5%	1/16W
R012	1-216-839-11	METAL CHIP	33K	5%	1/16W
R013	1-216-831-11	METAL CHIP	6.8K	5%	1/16W
R014	1-216-831-11	METAL CHIP	6.8K	5%	1/16W
R015	1-216-839-11	METAL CHIP	33K	5%	1/16W
R016	1-216-833-11	METAL CHIP	10K	5%	1/16W
R017	1-216-835-11	METAL CHIP	15K	5%	1/16W
R018	1-216-834-11	METAL CHIP	12K	5%	1/16W
R019	1-216-834-11	METAL CHIP	12K	5%	1/16W
R020	1-216-825-11	METAL CHIP	2.2K	5%	1/16W
R022	1-216-829-11	METAL CHIP	4.7K	5%	1/16W
R023	1-216-833-11	METAL CHIP	10K	5%	1/16W
R024	1-216-821-11	METAL CHIP	1K	5%	1/16W
R025	1-216-864-11	METAL CHIP	0	5%	1/16W
R027	1-216-864-11	METAL CHIP	0	5%	1/16W
R036	1-216-864-11	METAL CHIP	0	5%	1/16W
R037	1-216-839-11	METAL CHIP	33K	5%	1/16W
R039	1-216-824-11	METAL CHIP	1.8K	5%	1/16W
R043	1-216-815-11	METAL CHIP	330	5%	1/16W

****

* A-7063-956-A MA-199 BOARD, COMPLETE
****
(TR42/TR70/TR82/TR550)
(Ref. No. 5,000 Series)

< CAPACITOR >

Ref. No.	Part No.	Description			Remark
C014	1-162-953-11	CERAMIC CHIP	100PF	5%	50V
C015	1-162-966-11	CERAMIC CHIP	0.0022uF	10%	50V
C032	1-164-346-11	CERAMIC CHIP	1uF		16V
C033	1-162-953-11	CERAMIC CHIP	100PF	5%	50V
C034	1-162-974-11	CERAMIC CHIP	0.01uF		50V
C035	1-162-587-11	CERAMIC CHIP	0.039uF	10%	25V
C036	1-164-004-11	CERAMIC CHIP	0.1uF	10%	25V
C037	1-164-346-11	CERAMIC CHIP	1uF		16V
C040	1-126-205-11	ELECT CHIP	47uF	20%	6.3V
C041	1-164-345-11	CERAMIC CHIP	0.082uF	10%	25V
C043	1-128-004-11	ELECT CHIP	10uF	20%	16V

< CONNECTOR >

CN001	1-691-487-21	CONNECTOR, FFC/FPC 8P
CN003	1-580-057-11	PIN, CONNECTOR 4P

< DIODE >

D001	8-719-404-49	DIODE	MA111
D002	8-719-404-49	DIODE	MA111
D004	8-719-404-19	DIODE	LN1251C (TALLY)

Ref. No.	Part No.	Description			Remark
C011	1-164-232-11	CERAMIC CHIP	0.01uF		50V
C012	1-163-037-11	CERAMIC CHIP	0.022uF	10%	25V
C013	1-162-953-11	CERAMIC CHIP	100PF	5%	50V
C014	1-162-953-11	CERAMIC CHIP	100PF	5%	50V
C015	1-162-966-11	CERAMIC CHIP	0.0022uF	10%	50V
C019	1-164-232-11	CERAMIC CHIP	0.01uF		50V
C020	1-163-037-11	CERAMIC CHIP	0.022uF	10%	25V
C021	1-126-206-11	ELECT CHIP	47uF	20%	6.3V
C022	1-164-004-11	CERAMIC CHIP	0.1uF	10%	25V
C023	1-165-031-21	TANTAL. CHIP	1uF	20%	16V
C024	1-163-037-11	CERAMIC CHIP	0.022uF	10%	25V
C025	1-163-023-00	CERAMIC CHIP	0.015uF	5%	50V
C026	1-163-037-11	CERAMIC CHIP	0.022uF	10%	25V
C027	1-163-037-11	CERAMIC CHIP	0.022uF	10%	25V
C030	1-164-348-11	CERAMIC CHIP	0.056uF	10%	25V
C048	1-126-004-11	ELECT CHIP	10uF	20%	16V

< CONNECTOR >

Ref. No.	Part No.	Description
CN001	1-691-490-21	CONNECTOR, FFC/FPC 11P
CN002	1-580-057-11	PIN, CONNECTOR 4P
CN003	1-580-057-11	PIN, CONNECTOR 4P

< DIODE >

Ref. No.	Part No.	Description	
D001	8-719-404-46	DIODE	MA110
D002	8-719-404-46	DIODE	MA110
D004	8-719-404-19	DIODE	LN1251C (TALLY)

< IC >

Ref. No.	Part No.	Description	
IC001	8-759-084-52	IC	CXA1618AN-E2
IC002	8-749-923-28	IC	RS-3KB-T

< JACK >

Ref. No.	Part No.	Description
J001	1-691-727-11	JACK (SMALL TYPE)(EXT MIC)

< COIL >

Ref. No.	Part No.	Description
L001	1-412-030-11	INDUCTOR 1uH
L002	1-412-030-11	INDUCTOR 1uH
L003	1-412-030-11	INDUCTOR 1uH

< TRANSISTOR >

Ref. No.	Part No.	Description	
Q001	8-729-234-63	TRANSISTOR	2SC4116-YG
Q002	8-729-420-42	TRANSISTOR	UN5213

< RESISTOR >

Ref. No.	Part No.	Description			Remark
R003	1-216-829-11	METAL CHIP	4.7K	5%	1/16W
R004	1-216-833-11	METAL CHIP	10K	5%	1/16W
R005	1-216-821-11	METAL CHIP	1K	5%	1/16W
R006	1-216-813-11	METAL CHIP	220	5%	1/16W
R007	1-216-834-11	METAL CHIP	12K	5%	1/16W
R008	1-216-834-11	METAL CHIP	12K	5%	1/16W
R009	1-216-835-11	METAL CHIP	15K	5%	1/16W
R010	1-216-833-11	METAL CHIP	10K	5%	1/16W
R011	1-216-825-11	METAL CHIP	2.2K	5%	1/16W
R012	1-216-839-11	METAL CHIP	33K	5%	1/16W
R013	1-216-831-11	METAL CHIP	6.8K	5%	1/16W
R014	1-216-831-11	METAL CHIP	6.8K	5%	1/16W
R015	1-216-839-11	METAL CHIP	33K	5%	1/16W
R016	1-216-833-11	METAL CHIP	10K	5%	1/16W
R017	1-216-835-11	METAL CHIP	15K	5%	1/16W
R018	1-216-834-11	METAL CHIP	12K	5%	1/16W
R019	1-216-834-11	METAL CHIP	12K	5%	1/16W
R020	1-216-825-11	METAL CHIP	2.2K	5%	1/16W
R022	1-216-829-11	METAL CHIP	4.7K	5%	1/16W
R023	1-216-833-11	METAL CHIP	10K	5%	1/16W
R024	1-216-821-11	METAL CHIP	1K	5%	1/16W
R025	1-216-864-11	METAL CHIP	0	5%	1/16W
R027	1-216-864-11	METAL CHIP	0	5%	1/16W
R030	1-216-864-11	METAL CHIP	0	5%	1/16W
R037	1-216-839-11	METAL CHIP	33K	5%	1/16W
R038	1-216-824-11	METAL CHIP	1.8K	5%	1/16W
R043	1-216-815-11	METAL CHIP	330	5%	1/16W

****

* A-7063-258-A MA-199 BOARD, COMPLETE
****
(TR42/TR70/TR82/TR550)
(Ref. No. 5,000 Series)

< CAPACITOR >

Ref. No.	Part No.	Description			Remark
C014	1-162-953-11	CERAMIC CHIP	100PF	5%	50V
C015	1-162-966-11	CERAMIC CHIP	0.0022uF	10%	50V
C032	1-164-346-11	CERAMIC CHIP	1uF		16V
C033	1-162-953-11	CERAMIC CHIP	100PF	5%	50V
C034	1-162-974-11	CERAMIC CHIP	0.01uF		50V
C035	1-163-407-11	CERAMIC CHIP	0.039uF	10%	25V
C036	1-164-004-11	CERAMIC CHIP	0.1uF	10%	25V
C037	1-164-346-11	CERAMIC CHIP	1uF		16V
C040	1-126-205-11	ELECT CHIP	47uF	20%	6.3V
C041	1-164-345-11	CERAMIC CHIP	0.033uF	10%	25V
C048	1-126-004-11	ELECT CHIP	10uF	20%	16V

< CONNECTOR >

Ref. No.	Part No.	Description
CN001	1-691-487-21	CONNECTOR, FFC/FPC 8P
CN003	1-580-057-11	PIN, CONNECTOR 4P

< DIODE >

Ref. No.	Part No.	Description	
D001	8-719-404-49	DIODE	MA111
D002	8-719-404-49	DIODE	MA111
D004	8-719-404-19	DIODE	LN1251C (TALLY)

Ref. No.	Part No.	Description				Remark
		< IC >				
IC002	8-749-923-29	IC RS-20ET				
IC003	8-759-822-37	IC LA7293M-TE				
		< COIL >				
L002	1-412-939-11	INDUCTOR 1uH				
L003	1-412-939-11	INDUCTOR 1uH				
		< JACK >				
J001	1-568-027-11	JACK, SMALL TYPE 1P (EXT MIC)				
		< TRANSISTOR >				
Q002	8-729-402-63	TRANSISTOR 2SB1218A-Q				
		< RESISTOR >				
R027	1-216-864-11	METAL CHIP	0	5%	1/16W	
R028	1-216-820-11	METAL CHIP	820	5%	1/16W	
R029	1-216-823-11	METAL CHIP	1.5K	5%	1/16W	
R030	1-216-830-11	METAL CHIP	5.6K	5%	1/16W	
R031	1-216-838-11	METAL CHIP	27K	5%	1/16W	
R032	1-216-831-11	METAL CHIP	6.8K	5%	1/16W	
R033	1-216-838-11	METAL CHIP	27K	5%	1/16W	
R043	1-216-815-11	METAL CHIP	330	5%	1/16W	
R044	1-216-853-11	METAL CHIP	470K	5%	1/16W	

****

* A-7072-000-A SL-38 BOARD, COMPLETE

****

(Ref. No. 4,000 Series)

Ref. No.	Part No.	Description				Remark
		< CAPACITOR >				
C543	1-135-259-11	TANTAL. CHIP	10uF	20%	6.3V	
C544	1-135-211-11	TANTAL. CHIP	6.8uF	20%	6.3V	
C545	1-135-211-11	TANTAL. CHIP	6.8uF	20%	6.3V	
C546	1-164-232-11	CERAMIC CHIP	0.01uF		50V	
C547	1-164-232-11	CERAMIC CHIP	0.01uF		50V	
C551	1-164-232-11	CERAMIC CHIP	0.01uF		50V	
C553	1-164-361-11	CERAMIC CHIP	0.047uF		16V	
C554	1-135-215-21	TANTAL. CHIP	6.8uF	20%	16V	
C555	1-162-970-11	CERAMIC CHIP	0.01uF	10%	25V	
C556	1-162-974-11	CERAMIC CHIP	0.01uF		50V	
C557	1-135-149-21	TANTALUM CHIP	2.2uF	20%	10V	
C558	1-164-489-11	CERAMIC CHIP	0.22uF	10%	16V	
		< CONNECTOR >				
CN500	1-691-473-21	CONNECTOR, FFC/FPC 7P				
CN501	1-691-472-21	CONNECTOR, FFC/FPC 6P				
CN502	1-691-482-21	CONNECTOR, FFC/FPC 15P				
		< IC >				
IC507	8-759-165-47	IC MPC1780VFUEB				
		< COIL >				
L505	1-414-078-11	INDUCTOR 10uH				
		< TRANSISTOR >				
Q560	8-729-805-25	TRANSISTOR 2SB1121				
Q561	8-729-425-50	TRANSISTOR 2SB1462Q				
Q562	8-729-402-81	TRANSISTOR XN4501				
		< RESISTOR >				
R562	1-218-879-11	METAL CHIP	22K	0.50%	1/16W	
R563	1-218-879-11	METAL CHIP	22K	0.50%	1/16W	
R564	1-216-864-11	METAL CHIP	0	5%	1/16W	
R565	1-216-833-11	METAL CHIP	10K	5%	1/16W	
R566	1-218-857-11	METAL CHIP	2.7K	0.50%	1/16W	
R567	1-216-295-00	METAL CHIP	0	5%	1/10W	
R568	1-216-168-00	METAL GLAZE	56	5%	1/8W	
R569	1-218-879-11	METAL CHIP	22K	0.50%	1/16W	
R570	1-216-827-11	METAL CHIP	3.3K	5%	1/16W	
R571	1-218-879-11	METAL CHIP	22K	0.50%	1/16W	
R572	1-216-841-11	METAL CHIP	47K	5%	1/16W	
R590	1-216-833-11	METAL CHIP	10K	5%	1/16W	
R591	1-216-832-11	METAL CHIP	8.2K	5%	1/16W	
		< FLEXIBLE BOARD >				
W500	1-651-889-11	FP-48 FLEXIBLE BOARD				
W501	1-642-186-11	FP-437 FLEXIBLE BOARD				

****

Ref. No.	Part No.	Description	Remark
		< IC >	
IC003	8-749-921-29	IC HD-200T	
IC005	8-759-833-87	IC LA7283M-TE	
		< COIL >	
L002	1-412-838-11	INDUCTOR 1uH	
L005	1-412-839-11	INDUCTOR 1uH	
		< JACK >	
J001	1-562-887-11	JACK, SMALL TYPE 1P (EXT MIC)	
		< TRANSISTOR >	
Q002	8-729-402-63	TRANSISTOR 2SB1218A-Q	
		< RESISTOR >	
R027	1-216-864-11	METAL CHIP 0 5% 1/16W	
R028	1-216-820-11	METAL CHIP 820 5% 1/16W	
R029	1-216-823-11	METAL CHIP 1.5K 5% 1/16W	
R030	1-216-830-11	METAL CHIP 5.6K 5% 1/16W	
R031	1-216-838-11	METAL CHIP 27K 5% 1/16W	
R032	1-216-831-11	METAL CHIP 6.8K 5% 1/16W	
R033	1-216-838-11	METAL CHIP 27K 5% 1/16W	
R043	1-216-815-11	METAL CHIP 330 5% 1/16W	
R044	1-216-853-11	METAL CHIP 470K 5% 1/16W	

\##

Ref. No.	Part No.	Description	Remark
*	A-7012-030-A	SL-38 BOARD, COMPLETE ******************** (Ref. No. 4,000 Series)	
		< CAPACITOR >	
C543	1-135-259-11	TANTAL. CHIP 10uF 20% 6.3V	
C544	1-135-311-11	TANTAL. CHIP 4.7uF 20% 6.3V	
C545	1-135-311-11	TANTAL. CHIP 4.7uF 20% 6.3V	
C546	1-164-232-11	CERAMIC CHIP 0.01uF 50V	
C547	1-164-232-11	CERAMIC CHIP 0.01uF 50V	
C551	1-164-232-11	CERAMIC CHIP 0.01uF 50V	
C553	1-164-301-11	CERAMIC CHIP 0.047uF 16V	
C554	1-135-215-21	TANTAL. CHIP 6.8uF 20% 16V	
C555	1-163-970-11	CERAMIC CHIP 0.01uF 10% 25V	
C556	1-163-974-11	CERAMIC CHIP 0.01uF 50V	
C557	1-135-149-21	TANTALUM CHIP 2.2uF 20% 10V	
C558	1-164-489-11	CERAMIC CHIP 0.22uF 10% 16V	
		< CONNECTOR >	
CN500	1-691-473-21	CONNECTOR, FFC/FPC 7P	
CN501	1-691-472-21	CONNECTOR, FFC/FPC 6P	
CN502	1-691-483-21	CONNECTOR, FFC/FPC 15P	

Ref. No.	Part No.	Description	Remark
		< IC >	
IC507	8-759-165-47	IC MPC1780VFUEB	
		< COIL >	
L506	1-414-078-11	INDUCTOR 10uH	
		< TRANSISTOR >	
Q560	8-729-806-35	TRANSISTOR 2SB1121	
Q561	8-729-425-60	TRANSISTOR 2SB1462Q	
Q562	8-729-402-81	TRANSISTOR XN4501	
		< RESISTOR >	
R562	1-218-879-11	METAL CHIP 22K 0.50% 1/16W	
R563	1-218-879-11	METAL CHIP 22K 0.50% 1/16W	
R564	1-216-864-11	METAL CHIP 0 5% 1/16W	
R565	1-216-833-11	METAL CHIP 10K 5% 1/16W	
R566	1-218-857-11	METAL CHIP 2.7K 0.50% 1/16W	
R567	1-216-295-00	METAL CHIP 0 5% 1/10W	
R568	1-216-188-00	METAL GLAZE 56 5% 1/8W	
R569	1-218-878-11	METAL CHIP 22K 0.50% 1/16W	
R570	1-216-827-11	METAL CHIP 3.3K 5% 1/16W	
R571	1-218-879-11	METAL CHIP 33K 0.50% 1/16W	
R572	1-216-841-11	METAL CHIP 47K 5% 1/16W	
R590	1-216-833-11	METAL CHIP 10K 5% 1/16W	
R591	1-216-832-11	METAL CHIP 8.2K 5% 1/16W	
		< FLEXIBLE BOARD >	
W500	1-651-889-11	FP-48 FLEXIBLE BOARD	
W501	1-642-186-11	FP-417 FLEXIBLE BOARD	

\##

Ref. No.	Part No.	Description			Remark
*	A-7063-961-A	VC-138 BOARD, COMPLETE (TR72/430)			
		**********			
*	A-7066-018-A	VC-138 BOARD, COMPLETE (TR80)			
		**********			
*	A-7066-080-A	VC-138 BOARD, COMPLETE (TR400/TR750)			
		**********			
*	A-7063-955-A	VC-145 BOARD, COMPLETE (TR82)			
		**********			
*	A-7066-007-A	VC-145 BOARD, COMPLETE (TR70)			
		**********			
*	A-7066-084-A	VC-145 BOARD, COMPLETE (TR42)			
		**********			
*	A-7066-088-A	VC-145 BOARD, COMPLETE (TR550)			
		**********			
		(Ref. No. 1,000 Series)			
		< CAPACITOR >			
C604	1-164-360-11	CERAMIC CHIP	0.1uF		16V
C605	1-135-181-21	TANTALUM CHIP	4.7uF	20%	6.3V
C606	1-135-259-11	TANTAL. CHIP	10uF	20%	6.3V
C607	1-162-974-11	CERAMIC CHIP	0.01uF		50V
C608	1-104-847-11	TANTAL. CHIP	22uF	20%	4V
		(TR42/TR72/TR82/TR430/TR550)			
C609	1-135-259-11	TANTAL. CHIP	10uF	20%	6.3V
C610	1-164-360-11	CERAMIC CHIP	0.1uF		16V
C611	1-164-360-11	CERAMIC CHIP	0.1uF		16V
		(TR42/TR72/TR82/TR430/TR550)			
C613	1-162-974-11	CERAMIC CHIP	0.01uF		50V
		(TR42/TR72/TR82/TR430/TR550)			
C614	1-162-974-11	CERAMIC CHIP	0.01uF		50V
		(TR42/TR72/TR82/TR430/TR550)			
C616	1-135-091-21	TANTAL. CHIP	1uF	20%	16V
C617	1-164-004-11	CERAMIC CHIP	0.1uF	10%	25V
C618	1-165-176-11	CERAMIC CHIP	0.047uF	10%	16V
C619	1-164-360-11	CERAMIC CHIP	0.1uF		16V
C620	1-164-360-11	CERAMIC CHIP	0.1uF		16V
C621	1-162-974-11	CERAMIC CHIP	0.01uF		50V
C622	1-164-360-11	CERAMIC CHIP	0.1uF		16V
C623	1-164-360-11	CERAMIC CHIP	0.1uF		16V
C624	1-162-974-11	CERAMIC CHIP	0.01uF		50V
C627	1-162-946-11	CERAMIC CHIP	27PF	5%	50V
C628	1-162-974-11	CERAMIC CHIP	0.01uF		50V
C629	1-162-974-11	CERAMIC CHIP	0.01uF		50V
C630	1-162-946-11	CERAMIC CHIP	27PF	5%	50V
C631	1-135-181-21	TANTALUM CHIP	4.7uF	20%	6.3V
C632	1-162-974-11	CERAMIC CHIP	0.01uF		50V
C633	1-162-946-11	CERAMIC CHIP	27PF	5%	50V
		(TR82/TR400/TR550/TR750)			
C633	1-162-947-11	CERAMIC CHIP	33PF	5%	50V
		(TR42/TR70/TR72/TR80/TR430)			
C634	1-135-181-21	TANTALUM CHIP	4.7uF	20%	6.3V
C635	1-135-259-11	TANTAL. CHIP	10uF	20%	6.3V
		(TR82/TR400/TR550/TR750)			
C636	1-164-360-11	CERAMIC CHIP	0.1uF		16V
		(TR82/TR400/TR550/TR750)			
C637	1-164-360-11	CERAMIC CHIP	0.1uF		16V
C638	1-162-974-11	CERAMIC CHIP	0.01uF		50V
C639	1-135-181-21	TANTALUM CHIP	4.7uF	20%	6.3V
C699	1-162-954-11	CERAMIC CHIP	120PF	5%	50V
		(TR82/TR400/TR550/TR750)			
C701	1-163-059-91	CERAMIC CHIP	0.01uF	10%	50V
C702	1-162-638-11	CERAMIC CHIP	1uF		16V
C703	1-164-360-11	CERAMIC CHIP	0.1uF		16V
C704	1-164-360-11	CERAMIC CHIP	0.1uF		16V
C705	1-135-145-11	TANTALUM CHIP	0.47uF	10%	35V
C706	1-164-360-11	CERAMIC CHIP	0.1uF		16V
C708	1-164-360-11	CERAMIC CHIP	0.1uF		16V
C709	1-135-214-21	TANTAL. CHIP	4.7uF	20%	20V
C710	1-162-971-11	CERAMIC CHIP	0.001uF		50V
C711	1-162-971-11	CERAMIC CHIP	0.001uF		50V
C712	1-164-360-11	CERAMIC CHIP	0.1uF		16V
C713	1-107-685-11	TANTAL. CHIP	15uF	20%	6.3V
C714	1-135-259-11	TANTAL. CHIP	10uF	20%	6.3V
C715	1-162-974-11	CERAMIC CHIP	0.01uF		50V
C716	1-164-360-11	CERAMIC CHIP	0.1uF		16V
C717	1-162-974-11	CERAMIC CHIP	0.01uF		50V
C718	1-162-637-11	CERAMIC CHIP	0.47uF		16V
C719	1-162-971-11	CERAMIC CHIP	0.001uF		50V
C720	1-162-974-11	CERAMIC CHIP	0.01uF		50V
C721	1-162-916-11	CERAMIC CHIP	12PF	5%	50V
C722	1-135-181-21	TANTALUM CHIP	4.7uF	20%	6.3V
C724	1-162-925-11	CERAMIC CHIP	68PF	5%	50V
		(TR42/TR70/TR72/TR80/TR430)			
C724	1-162-949-11	CERAMIC CHIP	47PF	5%	50V
		(TR82/TR400/TR550/TR750)			
C725	1-162-974-11	CERAMIC CHIP	0.01uF		50V
C726	1-135-259-11	TANTAL. CHIP	10uF	20%	6.3V
C727	1-162-974-11	CERAMIC CHIP	0.01uF		50V
C728	1-162-974-11	CERAMIC CHIP	0.01uF		50V
C729	1-162-974-11	CERAMIC CHIP	0.01uF		50V
C730	1-163-077-00	CERAMIC CHIP	0.1uF	10%	25V
		(TR82/TR400/TR550/TR750)			
C730	1-164-298-11	CERAMIC CHIP	0.15uF	10%	25V
		(TR42/TR70/TR72/TR80/TR430)			
C731	1-135-091-21	TANTAL. CHIP	1uF	20%	16V
C732	1-135-181-21	TANTALUM CHIP	4.7uF	20%	6.3V
C733	1-135-181-21	TANTALUM CHIP	4.7uF	20%	6.3V
C734	1-135-091-21	TANTAL. CHIP	1uF	20%	16V
C735	1-162-974-11	CERAMIC CHIP	0.01uF		50V
C737	1-162-946-11	CERAMIC CHIP	27PF	5%	50V

Ref.No.	Part No.	Description	Remark
*	A-7053-961-A	VC-138 BOARD, COMPLETE (TR72/430) **********	
*	A-7066-012-A	VC-138 BOARD, COMPLETE (TR60) **********	
*	A-7068-080-A	VC-138 BOARD, COMPLETE (TR400/TR750) **********	
*	A-7069-955-A	VC-145 BOARD, COMPLETE (TR82) **********	
*	A-7066-007-A	VC-145 BOARD, COMPLETE (TR70) **********	
*	A-7066-084-A	VC-145 BOARD, COMPLETE (TR43) **********	
*	A-7068-048-A	VC-145 BOARD, COMPLETE (TR550) **********	
			(Ref. No. 1,000 Series)
		< CAPACITOR >	
C804	1-164-360-11	CERAMIC CHIP 0.1uF	16V
C805	1-135-181-21	TANTALUM CHIP 4.7uF 20%	6.3V
C806	1-135-259-11	TANTAL. CHIP 10uF 20%	6.3V
C807	1-162-974-11	CERAMIC CHIP 0.01uF	50V
C808	1-104-847-11	TANTAL. CHIP 22uF 20%	4V
			(TR42/TR72/TR82/TR430/TR550)
C809	1-135-259-11	TANTAL. CHIP 10uF 20%	6.3V
C810	1-164-360-11	CERAMIC CHIP 0.1uF	16V
C811	1-164-360-11	CERAMIC CHIP 0.1uF	16V
			(TR42/TR72/TR82/TR430/TR550)
C813	1-162-974-11	CERAMIC CHIP 0.01uF	50V
			(TR42/TR72/TR82/TR430/TR550)
C814	1-162-974-11	CERAMIC CHIP 0.01uF	50V
			(TR42/TR72/TR82/TR430/TR550)
C816	1-135-091-21	TANTAL. CHIP 1uF 20%	16V
C817	1-164-004-11	CERAMIC CHIP 0.1uF 10%	25V
C818	1-165-176-11	CERAMIC CHIP 0.047uF 10%	16V
C819	1-164-360-11	CERAMIC CHIP 0.1uF	16V
C820	1-164-360-11	CERAMIC CHIP 0.1uF	16V
C821	1-162-974-11	CERAMIC CHIP 0.01uF	50V
C822	1-164-180-11	CERAMIC CHIP 0.1uF	16V
C823	1-164-180-11	CERAMIC CHIP 0.1uF	16V
C824	1-162-974-11	CERAMIC CHIP 0.01uF	50V
C827	1-162-946-11	CERAMIC CHIP 27PF 5%	50V
C828	1-162-974-11	CERAMIC CHIP 0.01uF	50V
C829	1-162-974-11	CERAMIC CHIP 0.01uF	50V
C830	1-162-946-11	CERAMIC CHIP 27PF 5%	50V
C831	1-135-181-21	TANTALUM CHIP 4.7uF 20%	6.3V
C832	1-162-974-11	CERAMIC CHIP 0.01uF	50V
C833	1-162-946-11	CERAMIC CHIP 27PF 5%	50V
			(TR82/TR400/TR550/TR750)

Ref.No.	Part No.	Description	Remark
C833	1-162-947-11	CERAMIC CHIP 33PF 5%	50V
			(TR42/TR70/TR72/TR80/TR430)
C834	1-135-181-21	TANTALUM CHIP 4.7uF 20%	6.3V
C835	1-135-259-11	TANTAL. CHIP 10uF 20%	6.3V
			(TR82/TR400/TR550/TR750)
C836	1-164-360-11	CERAMIC CHIP 0.1uF	16V
			(TR82/TR400/TR550/TR750)
C837	1-164-360-11	CERAMIC CHIP 0.1uF	16V
C838	1-162-974-11	CERAMIC CHIP 0.01uF	50V
C839	1-135-181-21	TANTALUM CHIP 4.7uF 20%	6.3V
C899	1-162-954-11	CERAMIC CHIP 150PF 5%	50V
			(TR82/TR400/TR550/TR750)
C701	1-163-038-91	CERAMIC CHIP 0.01uF 10%	50V
C702	1-162-838-11	CERAMIC CHIP 1uF	16V
C703	1-164-360-11	CERAMIC CHIP 0.1uF	16V
C704	1-164-360-11	CERAMIC CHIP 0.1uF	16V
C705	1-135-145-11	TANTALUM CHIP 0.47uF 10%	35V
C706	1-164-360-11	CERAMIC CHIP 0.1uF	16V
C708	1-164-360-11	CERAMIC CHIP 0.1uF	16V
C709	1-135-214-21	TANTAL. CHIP 4.7uF 20%	25V
C710	1-162-971-11	CERAMIC CHIP 0.001uF	50V
C711	1-162-971-11	CERAMIC CHIP 0.001uF	50V
C712	1-164-363-11	CERAMIC CHIP 0.1uF	16V
C713	1-107-885-11	TANTAL. CHIP 15uF 20%	6.3V
C714	1-135-259-11	TANTAL. CHIP 10uF 20%	6.3V
C715	1-162-974-11	CERAMIC CHIP 0.01uF	50V
C716	1-164-360-11	CERAMIC CHIP 0.1uF	16V
C717	1-162-974-11	CERAMIC CHIP 0.01uF	50V
C718	1-163-037-11	CERAMIC CHIP 0.47uF	16V
C719	1-162-971-11	CERAMIC CHIP 0.001uF	50V
C720	1-162-974-11	CERAMIC CHIP 0.01uF	50V
C721	1-162-916-11	CERAMIC CHIP 12PF 5%	50V
C722	1-135-181-21	TANTALUM CHIP 4.7uF 20%	6.3V
C724	1-162-925-11	CERAMIC CHIP 68PF 5%	50V
			(TR42/TR70/TR72/TR80/TR430)
C724	1-162-949-11	CERAMIC CHIP 47PF 5%	50V
			(TR82/TR400/TR550/TR750)
C725	1-162-974-11	CERAMIC CHIP 0.01uF	50V
C726	1-135-259-11	TANTAL. CHIP 10uF 20%	6.3V
C727	1-162-974-11	CERAMIC CHIP 0.01uF	50V
C728	1-162-974-11	CERAMIC CHIP 0.01uF	50V
C729	1-162-974-11	CERAMIC CHIP 0.01uF	50V
C730	1-163-077-00	CERAMIC CHIP 0.1uF 10%	25V
			(TR82/TR400/TR550/TR750)
C730	1-164-298-11	CERAMIC CHIP 0.15uF 10%	25V
			(TR42/TR70/TR72/TR80/TR430)
C731	1-135-091-21	TANTAL. CHIP 1uF 20%	16V
C732	1-135-181-21	TANTALUM CHIP 4.7uF 20%	6.3V
C733	1-135-181-21	TANTALUM CHIP 4.7uF 20%	6.3V
C734	1-135-091-21	TANTAL. CHIP 1uF 20%	16V
C735	1-162-974-11	CERAMIC CHIP 0.01uF	50V
C737	1-162-946-11	CERAMIC CHIP 27PF 5%	50V

Ref. No.	Part No.	Description	Remark
C739	1-135-181-21	TANTALUM CHIP 4.7uF 20% 6.3V	
C741	1-135-181-21	TANTALUM CHIP 4.7uF 20% 6.3V	
C742	1-164-360-11	CERAMIC CHIP 0.1uF 16V	
C743	1-162-974-11	CERAMIC CHIP 0.01uF 50V	
C744	1-162-974-11	CERAMIC CHIP 0.01uF 50V	
C745	1-162-974-11	CERAMIC CHIP 0.01uF 50V	
C746	1-164-360-11	CERAMIC CHIP 0.1uF 16V	
C747	1-164-360-11	CERAMIC CHIP 0.1uF 16V	
C748	1-164-360-11	CERAMIC CHIP 0.1uF 16V	
C749	1-135-181-21	TANTALUM CHIP 4.7uF 20% 6.3V	
C750	1-162-971-11	CERAMIC CHIP 0.001uF 50V	
C751	1-164-004-11	CERAMIC CHIP 0.1uF 10% 25V	
C752	1-162-971-11	CERAMIC CHIP 0.001uF 50V	
C753	1-162-974-11	CERAMIC CHIP 0.01uF 50V	
C754	1-162-974-11	CERAMIC CHIP 0.01uF 50V	
C755	1-162-974-11	CERAMIC CHIP 0.01uF 50V	
C756	1-104-752-11	TANTAL. CHIP 33uF 20% 6.3V	
C757	1-162-974-11	CERAMIC CHIP 0.01uF 50V	
C771	1-164-245-11	CERAMIC CHIP 0.015uF 10% 25V	(TR82/TR400/TR550/TR750)
C772	1-164-004-11	CERAMIC CHIP 0.1uF 10% 25V	(TR82/TR400/TR550/TR750)
C773	1-164-299-11	CERAMIC CHIP 0.22uF 10% 25V	(TR82/TR400/TR550/TR750)
C774	1-128-257-21	ELECT CHIP 33uF 20% 10V	(TR82/TR400/TR550/TR750)
C775	1-128-257-21	ELECT CHIP 33uF 20% 10V	(TR82/TR400/TR550/TR750)
C776	1-162-953-11	CERAMIC CHIP 100PF 5% 50V	(TR82/TR400/TR550/TR750)
C777	1-162-568-11	CERAMIC CHIP 0.33uF 10% 16V	(TR82/TR400/TR550/TR750)
C778	1-162-953-11	CERAMIC CHIP 100PF 5% 50V	(TR82/TR400/TR550/TR750)
C779	1-162-568-11	CERAMIC CHIP 0.33uF 10% 16V	(TR82/TR400/TR550/TR750)
C780	1-164-360-11	CERAMIC CHIP 0.1uF 16V	(TR82/TR400/TR550/TR750)
C781	1-162-974-11	CERAMIC CHIP 0.01uF 50V	(TR82/TR400/TR550/TR750)
C782	1-135-259-11	TANTAL. CHIP 10uF 20% 6.3V	(TR82/TR400/TR550/TR750)
C783	1-135-259-11	TANTAL. CHIP 10uF 20% 6.3V	(TR82/TR400/TR550/TR750)
C784	1-162-974-11	CERAMIC CHIP 0.01uF 50V	(TR82/TR400/TR550/TR750)
C785	1-162-974-11	CERAMIC CHIP 0.01uF 50V	(TR82/TR400/TR550/TR750)
C786	1-135-259-11	TANTAL. CHIP 10uF 20% 6.3V	(TR82/TR400/TR550/TR750)
C788	1-164-004-11	CERAMIC CHIP 0.1uF 10% 25V	(TR82/TR400/TR550/TR750)
C789	1-164-245-11	CERAMIC CHIP 0.015uF 10% 25V	(TR82/TR400/TR550/TR750)
C790	1-164-299-11	CERAMIC CHIP 0.22uF 10% 25V	(TR82/TR400/TR550/TR750)
C793	1-135-259-11	TANTAL. CHIP 10uF 20% 6.3V	(TR82/TR400/TR550/TR750)
C794	1-164-360-11	CERAMIC CHIP 0.1uF 16V	(TR82/TR400/TR550/TR750)
		< CONNECTOR >	
* CN601	1-764-395-21	CONNECTOR, BOARD TO BOARD 42P	
CN701	1-750-630-11	CONNECTOR, FFC/FPC (ZIF) 16P	
* CN751	1-764-528-11	CONNECTOR, FFC/FPC (ZIF) 21P	
CN775	1-691-487-21	CONNECTOR, FFC/FPC 8P	(TR82/TR400/TR550/TR750)
		< TRIMMER >	
CT701	1-141-356-11	CAP, ADJ	
		< DIODE >	
D701	8-719-404-49	DIODE MA111	
D702	8-719-404-49	DIODE MA111	
D703	8-719-404-49	DIODE MA111	
D705	8-719-404-49	DIODE MA111	
		< FILTER >	
FL601	1-239-352-11	FILTER, LOW PASS	(TR82/TR400/TR550/TR750)
FL601	1-239-766-11	FILTER, LOW PASS	(TR42/TR70/TR72/TR80/TR430)
		< IC >	
IC601	8-759-044-78	IC AK6420F-E1	
IC602	8-759-260-67	IC SC424608MC68HC11MA8FU	(TR42/TR70/TR72/TR80/TR82/TR430)
IC602	8-759-277-18	IC SC424609MC68HC11MA8FU	(TR400/TR550/TR750)
IC603	8-759-064-36	IC MB88346BPFV	
IC604	8-759-710-29	IC NJM2235M	(TR42/TR72/TR82/TR430/TR550)
IC609	8-752-365-71	IC CXD2150R	(TR42/TR70/TR72/TR80/TR82/TR430)
IC609	8-752-369-24	IC CXD2150AR	(TR400/TR550/TR750)
IC610	8-752-365-72	IC CXD2151R	
IC611	8-759-262-36	IC CXD2133BR	
IC613	8-759-247-06	IC CXD2152REL	(TR82/TR400/TR550/TR750)
IC614	8-759-255-09	IC uPD6461GS-802-GLG-E2	
IC701	8-752-355-07	IC CXD1267N	
IC702	8-752-365-73	IC CXD2405R	(TR82/TR400/TR550/TR750)
IC702	8-752-365-74	IC CXD1266R	(TR42/TR70/TR72/TR80/TR430)
IC703	8-752-069-21	IC CXA1690Q	
IC704	8-759-173-24	IC AD875JST-REEL	(TR70/TR72/TR80/TR430)

Ref. No.	Part No.	Description				Remark
C739	1-135-181-21	TANTALUM CHIP	4.7uF	20%	6.3V	
C741	1-135-181-21	TANTALUM CHIP	4.7uF	20%	6.3V	
C742	1-164-360-11	CERAMIC CHIP	0.1uF		16V	
C743	1-162-974-11	CERAMIC CHIP	0.01uF		50V	
C744	1-162-974-11	CERAMIC CHIP	0.01uF		50V	
C745	1-162-974-11	CERAMIC CHIP	0.01uF		50V	
C746	1-164-360-11	CERAMIC CHIP	0.1uF		16V	
C747	1-164-360-11	CERAMIC CHIP	0.1uF		16V	
C748	1-164-360-11	CERAMIC CHIP	0.1uF		16V	
C749	1-135-181-21	TANTALUM CHIP	4.7uF	20%	6.3V	
C750	1-162-971-11	CERAMIC CHIP	0.001uF		50V	
C751	1-164-004-11	CERAMIC CHIP	0.1uF	10%	25V	
C752	1-162-971-11	CERAMIC CHIP	0.001uF		50V	
C753	1-162-974-11	CERAMIC CHIP	0.01uF		50V	
C754	1-162-974-11	CERAMIC CHIP	0.01uF		50V	
C755	1-162-974-11	CERAMIC CHIP	0.01uF		50V	
C756	1-104-752-11	TANTAL. CHIP	33uF	20%	6.3V	
C757	1-162-974-11	CERAMIC CHIP	0.01uF		50V	
C771	1-164-245-11	CERAMIC CHIP	0.015uF	10%	25V	
			(TR82/TR400/TR550/TR750)			
C772	1-164-004-11	CERAMIC CHIP	0.1uF	10%	25V	
			(TR82/TR400/TR550/TR750)			
C773	1-164-299-11	CERAMIC CHIP	0.22uF	10%	25V	
			(TR82/TR400/TR550/TR750)			
C774	1-128-257-21	ELECT CHIP	33uF	20%	10V	
			(TR82/TR400/TR550/TR750)			
C775	1-128-257-21	ELECT CHIP	33uF	20%	10V	
			(TR82/TR400/TR550/TR750)			
C776	1-162-953-11	CERAMIC CHIP	100PF	5%	50V	
			(TR82/TR400/TR550/TR750)			
C777	1-162-948-11	CERAMIC CHIP	0.33uF	10%	16V	
			(TR82/TR400/TR550/TR750)			
C778	1-162-953-11	CERAMIC CHIP	100PF	5%	50V	
			(TR82/TR400/TR550/TR750)			
C779	1-162-948-11	CERAMIC CHIP	0.33uF	10%	16V	
			(TR82/TR400/TR550/TR750)			
C780	1-164-360-11	CERAMIC CHIP	0.1uF		16V	
			(TR82/TR400/TR550/TR750)			
C781	1-162-974-11	CERAMIC CHIP	0.01uF		50V	
			(TR82/TR400/TR550/TR750)			
C783	1-135-259-11	TANTAL. CHIP	10uF	20%	6.3V	
			(TR82/TR400/TR550/TR750)			
C788	1-135-259-11	TANTAL. CHIP	10uF	20%	6.3V	
			(TR82/TR400/TR550/TR750)			
C784	1-162-974-11	CERAMIC CHIP	0.01uF		50V	
			(TR82/TR400/TR550/TR750)			
C785	1-162-974-11	CERAMIC CHIP	0.01uF		50V	
			(TR82/TR400/TR550/TR750)			
C786	1-135-259-11	TANTAL. CHIP	10uF	20%	6.3V	
			(TR82/TR400/TR550/TR750)			
C788	1-164-004-11	CERAMIC CHIP	0.1uF	10%	25V	
			(TR82/TR400/TR550/TR750)			

Ref. No.	Part No.	Description				Remark
C789	1-164-245-11	CERAMIC CHIP			0.015uF	10% 25V
						(TR82/TR400/TR550/TR750)
C790	1-164-299-11	CERAMIC CHIP			0.22uF	10% 25V
						(TR82/TR400/TR550/TR750)
C793	1-135-259-11	TANTAL. CHIP			10uF	20% 6.3V
						(TR82/TR400/TR550/TR750)
C794	1-164-360-11	CERAMIC CHIP			0.1uF	16V
						(TR82/TR400/TR550/TR750)
		< CONNECTOR >				
* CN821	1-764-395-21	CONNECTOR, BOARD TO BOARD 42P				
CN721	1-750-680-11	CONNECTOR, FPC/FFC (ZIF) 16P				
* CN751	1-764-532-11	CONNECTOR, FPC/FFC (ZIF) 21P				
CN775	1-691-487-21	CONNECTOR, FPC/FFC 8P				
						(TR82/TR400/TR550/TR750)
		< TRIMMER >				
CT701	1-141-356-11	CAP, ADJ				
		< DIODE >				
D701	8-719-404-49	DIODE	MA111			
D702	8-719-404-49	DIODE	MA111			
D703	8-719-404-49	DIODE	MA111			
D705	8-719-404-49	DIODE	MA111			
		< FILTER >				
FL801	1-239-552-11	FILTER, LOW PASS				
						(TR82/TR400/TR550/TR750)
FL801	1-239-766-11	FILTER, LOW PASS				
						(TR42/TR70/TR72/TR80/TR430)
		< IC >				
IC801	8-759-044-78	IC	AN8425P-E1			
IC802	8-759-260-67	IC	SC4E4608MC88HC11MA8PU			
						(TR42/TR70/TR72/TR80/TR82/TR430)
IC802	8-759-277-18	IC	SC4E4608MC88HC11MA8PU			
						(TR400/TR550/TR750)
IC803	8-759-064-36	IC	MB88346PFV			
IC804	8-759-710-29	IC	HJM2236M(TR42/TR72/TR82/TR430/TR550)			
IC806	8-752-965-71	IC	CXD2150R			
						(TR42/TR70/TR72/TR80/TR82/TR430)
IC809	8-752-369-84	IC	CXD2150AR (TR400/TR550/TR750)			
IC810	8-752-365-72	IC	CXD2151R			
IC811	8-759-382-98	IC	CXD2138R			
IC813	8-759-247-06	IC	CXD1152BEL (TR82/TR400/TR550/TR750)			
IC814	8-759-255-09	IC	uPD6481GS-802-GAG-E2			
IC701	8-752-325-07	IC	CXD1267N			
IC702	8-752-365-73	IC	CXD2405R (TR82/TR400/TR550/TR750)			
IC703	8-752-365-74	IC	CXD1266R (TR42/TR70/TR72/TR80/TR430)			
IC705	8-752-089-21	IC	CXA1690Q			
IC704	8-759-173-24	IC	AD676JST-REEL (TR70/TR72/TR80/TR430)			

Ref. No.	Part No.	Description	Remark
IC704	8-759-263-29	IC HD49315FEB	(TR42/TR82/TR400/TR550/TR750)
IC705	8-752-365-76	IC CXD2407R	
IC751	8-759-701-24	IC NJM3414M	
IC752	8-759-058-52	IC XRA10324AF	
IC753	8-752-365-65	IC CXD2126N	
IC754	8-759-247-07	IC MPC17A34VMEL	
IC755	8-759-031-58	IC SC7SU04F	
IC772	8-759-234-77	IC TC4S66F	(TR82/TR400/TR550/TR750)
IC773	8-759-234-77	IC TC4S66F	(TR82/TR400/TR550/TR750)
IC774	8-759-058-45	IC NJM3403AV(TE2)	(TR82/TR400/TR550/TR750)
IC775	8-759-080-34	IC TA75W01FU-TE12R	(TR82/TR400/TR550/TR750)
IC776	8-759-248-78	IC MB88102PFV-G-BND-ER	(TR82/TR400/TR550/TR750)
IC777	8-752-850-54	IC CXP87132-010R	(TR82/TR400/TR550/TR750)
		< COIL >	
L601	1-412-058-11	INDUCTOR CHIP 10uH	
L602	1-414-078-11	INDUCTOR 10uH	
L603	1-412-058-11	INDUCTOR CHIP 10uH	
L604	1-414-078-11	INDUCTOR 10uH	
L605	1-410-391-11	INDUCTOR CHIP 68uH	
L606	1-414-078-11	INDUCTOR 10uH	
L607	1-414-078-11	INDUCTOR 10uH	(TR82/TR400/TR550/TR750)
L608	1-412-006-31	INDUCTOR CHIP 10uH	
L609	1-412-979-21	INDUCTOR 1uH	
L610	1-412-979-21	INDUCTOR 1uH	
L611	1-412-052-21	INDUCTOR CHIP 1uH	
L612	1-412-052-21	INDUCTOR CHIP 1uH	
L613	1-412-052-21	INDUCTOR CHIP 1uH	
L614	1-412-052-21	INDUCTOR CHIP 1uH	
L702	1-412-058-11	INDUCTOR CHIP 10uH	
L703	1-412-058-11	INDUCTOR CHIP 10uH	
L704	1-412-058-11	INDUCTOR CHIP 10uH	
L705	1-412-058-11	INDUCTOR CHIP 10uH	
L706	1-412-058-11	INDUCTOR CHIP 10uH	
L751	1-412-062-11	INDUCTOR CHIP 47uH	
L752	1-412-058-11	INDUCTOR CHIP 10uH	
L753	1-412-058-11	INDUCTOR CHIP 10uH	
L775	1-412-058-11	INDUCTOR CHIP 10uH	(TR82/TR400/TR550/TR750)
L777	1-414-078-11	INDUCTOR 10uH	(TR82/TR400/TR550/TR750)
L778	1-414-078-11	INDUCTOR 10uH	(TR82/TR400/TR550/TR750)
		< TRANSISTOR >	
Q604	8-729-010-60	TRANSISTOR MSA1586	
Q605	8-729-010-60	TRANSISTOR MSA1586	
Q606	8-729-010-75	TRANSISTOR MSC4116	
Q607	8-729-010-75	TRANSISTOR MSC4116	

Ref. No.	Part No.	Description	Remark
Q701	8-729-403-27	TRANSISTOR XN4401	
Q751	8-729-010-75	TRANSISTOR MSC4116	
Q752	8-729-015-76	TRANSISTOR UN5211	
		< RESISTOR >	
R601	1-216-851-11	METAL CHIP 330K 5% 1/16W	
R602	1-216-833-11	METAL CHIP 10K 5% 1/16W	
R603	1-216-857-11	METAL CHIP 1M 5% 1/16W	
R604	1-216-833-11	METAL CHIP 10K 5% 1/16W	
R605	1-216-864-11	METAL CHIP 0 5% 1/16W	
R606	1-216-847-11	METAL CHIP 150K 5% 1/16W	(TR42/TR72/TR82/TR430/TR550)
R607	1-216-839-11	METAL CHIP 33K 5% 1/16W	(TR42/TR72/TR82/TR430/TR550)
R608	1-216-864-11	METAL CHIP 0 5% 1/16W	
R609	1-216-838-11	METAL CHIP 27K 5% 1/16W	(TR42/TR72/TR82/TR430/TR550)
R610	1-216-839-11	METAL CHIP 33K 5% 1/16W	(TR42/TR72/TR82/TR430/TR550)
R611	1-216-838-11	METAL CHIP 27K 5% 1/16W	(TR42/TR72/TR82/TR430/TR550)
R612	1-216-825-11	METAL CHIP 2.2K 5% 1/16W	
R613	1-216-825-11	METAL CHIP 2.2K 5% 1/16W	
R614	1-216-825-11	METAL CHIP 2.2K 5% 1/16W	(TR70/TR80/TR400/TR750)
R615	1-216-825-11	METAL CHIP 2.2K 5% 1/16W	(TR70/TR80/TR400/TR750)
R616	1-216-864-11	METAL CHIP 0 5% 1/16W (TR82)	
R619	1-216-803-11	METAL CHIP 33 5% 1/16W	
R620	1-216-841-11	METAL CHIP 47K 5% 1/16W	
R621	1-216-841-11	METAL CHIP 47K 5% 1/16W	
R622	1-216-864-11	METAL CHIP 0 5% 1/16W	(TR70/TR80/TR400/TR750)
R624	1-216-864-11	METAL CHIP 0 5% 1/16W	(TR42/TR70/TR72/TR80/TR400/TR430/TR550/TR750)
R626	1-216-841-11	METAL CHIP 47K 5% 1/16W	
R627	1-216-841-11	METAL CHIP 47K 5% 1/16W	
R628	1-216-834-11	METAL CHIP 12K 5% 1/16W	(TR400/TR550/TR750)
R629	1-216-832-11	METAL CHIP 8.2K 5% 1/16W	(TR400/TR550/TR750)
R629	1-216-841-11	METAL CHIP 47K 5% 1/16W	(TR42/TR70/TR72/TR80/TR82/TR430)
R630	1-216-833-11	METAL CHIP 10K 5% 1/16W	
R631	1-216-864-11	METAL CHIP 0 5% 1/16W	
R634	1-216-821-11	METAL CHIP 1K 5% 1/16W	
R635	1-216-825-11	METAL CHIP 2.2K 5% 1/16W	
R636	1-216-845-11	METAL CHIP 100K 5% 1/16W	
R637	1-216-837-11	METAL CHIP 22K 5% 1/16W	
R638	1-216-839-11	METAL CHIP 33K 5% 1/16W	
R639	1-216-864-11	METAL CHIP 0 5% 1/16W	
R640	1-216-815-11	METAL CHIP 330 5% 1/16W	

Ref. No.	Part No.	Description	Remark
IC704	8-759-883-29	IC KM48315EEB	(TR42/TR72/TR400/TR550/TR750)
IC706	8-759-866-76	IC CXD2407R	
IC761	8-759-701-24	IC HJM3414M	
IC762	8-759-068-52	IC XRA1032AAP	
IC753	8-758-385-85	IC CXD3128R	
IC754	8-759-247-07	IC MPC17A04FWEL	
IC765	8-759-081-68	IC SC7SU04F	
IC772	8-759-284-77	IC TC4S66F	(TR42/TR400/TR550/TR750)
IC773	8-759-284-77	IC TC4S66F	(TR42/TR400/TR550/TR750)
IC774	8-759-068-45	IC HJM3403AF	(TR42) (TR42/TR400/TR550/TR750)
IC775	8-759-080-34	IC TA75W01FU-TE12R	(TR42/TR400/TR550/TR750)
IC776	8-759-248-78	IC MB81C1027PFV-G-BND-ER	(TR42/TR400/TR550/TR750)
IC777	8-759-850-54	IC CXP81188-010R	(TR42/TR400/TR550/TR750)
		< COIL >	
L601	1-412-058-11	INDUCTOR CHIP 10uH	
L602	1-414-078-11	INDUCTOR 10uH	
L603	1-412-058-11	INDUCTOR CHIP 10uH	
L604	1-414-078-11	INDUCTOR 10uH	
L605	1-410-991-11	INDUCTOR CHIP 68uH	
L606	1-414-078-11	INDUCTOR 10uH	
L607	1-414-078-11	INDUCTOR 10uH	(TR42/TR400/TR550/TR750)
L608	1-412-058-81	INDUCTOR CHIP 10uH	
L608	1-412-078-21	INDUCTOR 1uH	
L610	1-412-078-21	INDUCTOR 1uH	
L611	1-412-063-21	INDUCTOR CHIP 1uH	
L612	1-412-063-21	INDUCTOR CHIP 1uH	
L613	1-412-063-21	INDUCTOR CHIP 1uH	
L614	1-412-063-21	INDUCTOR CHIP 1uH	
L702	1-412-068-11	INDUCTOR CHIP 10uH	
L703	1-412-068-11	INDUCTOR CHIP 10uH	
L704	1-412-068-11	INDUCTOR CHIP 10uH	
L705	1-412-068-11	INDUCTOR CHIP 10uH	
L706	1-412-068-11	INDUCTOR CHIP 10uH	
L761	1-412-062-11	INDUCTOR CHIP 47uH	
L762	1-412-058-11	INDUCTOR CHIP 10uH	
L763	1-412-058-11	INDUCTOR CHIP 10uH	
L775	1-412-058-11	INDUCTOR CHIP 10uH	(TR42/TR400/TR550/TR750)
L777	1-414-078-11	INDUCTOR 10uH	(TR42/TR400/TR550/TR750)
L778	1-414-078-11	INDUCTOR 10uH	(TR42/TR400/TR550/TR750)
		< TRANSISTOR >	
Q804	8-729-010-60	TRANSISTOR MSA1586	
Q805	8-729-010-60	TRANSISTOR MSA1586	
Q806	8-729-010-76	TRANSISTOR MSC4116	
Q807	8-729-010-76	TRANSISTOR MSC4116	

Ref. No.	Part No.	Description	Remark
Q701	8-729-403-27	TRANSISTOR XN4401	
Q751	8-729-010-75	TRANSISTOR MSC4116	
Q752	8-729-015-78	TRANSISTOR UN5211	
		< RESISTOR >	
R601	1-216-851-11	METAL CHIP 330K 5% 1/16W	
R602	1-216-888-11	METAL CHIP 10K 5% 1/16W	
R603	1-216-857-11	METAL CHIP 1M 5% 1/16W	
R604	1-216-889-11	METAL CHIP 10K 5% 1/16W	
R605	1-216-864-11	METAL CHIP 0 5% 1/16W	
R606	1-216-847-11	METAL CHIP 150K 5% 1/16W	(TR42/TR72/TR82/TR430/TR550)
R607	1-218-839-11	METAL CHIP 33K 5% 1/16W	(TR42/TR72/TR82/TR430/TR550)
R608	1-216-864-11	METAL CHIP 0 5% 1/16W	
R609	1-216-838-11	METAL CHIP 27K 5% 1/16W	(TR42/TR72/TR82/TR430/TR550)
R610	1-218-839-11	METAL CHIP 33K 5% 1/16W	(TR42/TR72/TR82/TR430/TR550)
R611	1-216-838-11	METAL CHIP 27K 5% 1/16W	(TR42/TR72/TR82/TR430/TR550)
R612	1-216-835-11	METAL CHIP 2.2K 5% 1/16W	
R613	1-216-835-11	METAL CHIP 2.2K 5% 1/16W	
R614	1-216-835-11	METAL CHIP 2.2K 5% 1/16W	(TR70/TR80/TR400/TR750)
R615	1-216-835-11	METAL CHIP 2.2K 5% 1/16W	(TR70/TR80/TR400/TR750)
R616	1-216-864-11	METAL CHIP 0 5% 1/16W (TR82)	
R619	1-216-809-11	METAL CHIP 83 5% 1/16W	
R620	1-216-841-11	METAL CHIP 47K 5% 1/16W	
R621	1-216-841-11	METAL CHIP 47K 5% 1/16W	
R622	1-216-864-11	METAL CHIP 0 5% 1/16W	(TR70/TR80/TR400/TR750)
R624	1-216-854-11	METAL CHIP 0 5% 1/16W	(TR42/TR70/TR72/TR80/TR400/TR550/TR750)
R625	1-216-841-11	METAL CHIP 47K 5% 1/16W	
R627	1-216-841-11	METAL CHIP 47K 5% 1/16W	
R628	1-216-824-11	METAL CHIP 12K 5% 1/16W	(TR400/TR550/TR750)
R629	1-216-835-11	METAL CHIP 2.2K 5% 1/16W	(TR400/TR550/TR750)
R629	1-216-841-11	METAL CHIP 47K 5% 1/16W	(TR42/TR70/TR72/TR80/TR82/TR430)
R630	1-216-833-11	METAL CHIP 10K 5% 1/16W	
R631	1-216-864-11	METAL CHIP 0 5% 1/16W	
R634	1-216-821-11	METAL CHIP 1K 5% 1/16W	
R635	1-216-835-11	METAL CHIP 2.2K 5% 1/16W	
R636	1-216-845-11	METAL CHIP 100K 5% 1/16W	
R637	1-216-837-11	METAL CHIP 22K 5% 1/16W	
R638	1-216-839-11	METAL CHIP 33K 5% 1/16W	
R639	1-216-864-11	METAL CHIP 0 5% 1/16W	
R640	1-216-815-11	METAL CHIP 330 5% 1/16W	

Ref. No.	Part No.	Description				Remark
R643	1-216-833-11	METAL CHIP	10K	5%	1/16W	
R645	1-216-834-11	METAL CHIP	12K	5%	1/16W	
R646	1-216-818-11	METAL CHIP	560	5%	1/16W	
R647	1-216-834-11	METAL CHIP	12K	5%	1/16W	
R648	1-216-818-11	METAL CHIP	560	5%	1/16W	
R649	1-216-841-11	METAL CHIP	47K	5%	1/16W	
R650	1-216-827-11	METAL CHIP	3.3K	5%	1/16W	
R651	1-216-827-11	METAL CHIP	3.3K	5%	1/16W	
R652	1-216-841-11	METAL CHIP	47K	5%	1/16W	
R653	1-216-864-11	METAL CHIP	0	5%	1/16W	
R656	1-216-864-11	METAL CHIP	0	5%	1/16W	(TR42/TR70/TR72/TR80/TR430)
R657	1-216-864-11	METAL CHIP	0	5%	1/16W	(TR82/TR400/TR550/TR750)
R658	1-216-864-11	METAL CHIP	0	5%	1/16W	
R659	1-216-823-11	METAL CHIP	1.5K	5%	1/16W	
R661	1-216-841-11	METAL CHIP	47K	5%	1/16W	
R662	1-216-821-11	METAL CHIP	1K	5%	1/16W	
R663	1-216-825-11	METAL CHIP	2.2K	5%	1/16W	
R664	1-216-821-11	METAL CHIP	1K	5%	1/16W	
R665	1-216-825-11	METAL CHIP	2.2K	5%	1/16W	
R666	1-216-827-11	METAL CHIP	3.3K	5%	1/16W	
R667	1-216-820-11	METAL CHIP	820	5%	1/16W	
R668	1-216-824-11	METAL CHIP	1.8K	5%	1/16W	
R669	1-216-825-11	METAL CHIP	2.2K	5%	1/16W	(TR42/TR72/TR82/TR430/TR550)
R670	1-216-825-11	METAL CHIP	2.2K	5%	1/16W	(TR42/TR72/TR82/TR430/TR550)
R701	1-216-857-11	METAL CHIP	1M	5%	1/16W	
R702	1-216-833-11	METAL CHIP	10K	5%	1/16W	
R703	1-216-845-11	METAL CHIP	100K	5%	1/16W	
R704	1-216-840-11	METAL CHIP	39K	5%	1/16W	(TR42/TR82/TR400/TR550/TR750)
R705	1-216-827-11	METAL CHIP	3.3K	5%	1/16W	
R709	1-216-845-11	METAL CHIP	100K	5%	1/16W	
R710	1-216-864-11	METAL CHIP	0	5%	1/16W	(TR42/TR70/TR72/TR80/TR430)
R711	1-216-864-11	METAL CHIP	0	5%	1/16W	(TR82/TR400/TR550/TR750)
R712	1-216-864-11	METAL CHIP	0	5%	1/16W	(TR42/TR70/TR72/TR80/TR430)
R713	1-216-807-11	METAL CHIP	68	5%	1/16W	
R714	1-216-864-11	METAL CHIP	0	5%	1/16W	
R715	1-216-864-11	METAL CHIP	0	5%	1/16W	(TR82/TR400/TR550/TR750)
R716	1-218-847-11	METAL CHIP	1K	0.50%	1/16W	
R717	1-216-864-11	METAL CHIP	0	5%	1/16W	(TR82/TR400/TR550/TR750)
R718	1-216-807-11	METAL CHIP	68	5%	1/16W	
R719	1-218-876-11	METAL CHIP	16K	0.50%	1/16W	
R720	1-216-841-11	METAL CHIP	47K	5%	1/16W	(TR42)
R720	1-216-843-11	METAL CHIP	68K	5%	1/16W	(TR82/TR400/TR550/TR750)
R720	1-216-844-11	METAL CHIP	82K	5%	1/16W	(TR70/TR72/TR80/TR430)
R721	1-216-864-11	METAL CHIP	0	5%	1/16W	(TR42/TR82/TR400/TR550/TR750)
R722	1-216-864-11	METAL CHIP	0	5%	1/16W	(TR42/TR82/TR400/TR550/TR750)
R723	1-216-864-11	METAL CHIP	0	5%	1/16W	(TR70/TR72/TR80/TR430)
R724	1-216-864-11	METAL CHIP	0	5%	1/16W	(TR42/TR82/TR400/TR550/TR750)
R725	1-216-841-11	METAL CHIP	47K	5%	1/16W	
R739	1-216-864-11	METAL CHIP	0	5%	1/16W	(TR42)
R740	1-216-864-11	METAL CHIP	0	5%	1/16W	(TR70/TR72/TR80/TR82/TR400/TR430/TR550/TR750)
R741	1-218-855-11	METAL CHIP	2.2K	0.50%	1/16W	
R742	1-218-865-11	METAL CHIP	5.6K	0.50%	1/16W	
R743	1-216-833-11	METAL CHIP	10K	5%	1/16W	
R744	1-216-827-11	METAL CHIP	3.3K	5%	1/16W	
R745	1-216-837-11	METAL CHIP	22K	5%	1/16W	
R746	1-216-837-11	METAL CHIP	22K	5%	1/16W	
R747	1-216-820-11	METAL CHIP	820	5%	1/16W	
R748	1-216-828-11	METAL CHIP	3.9K	5%	1/16W	
R749	1-216-851-11	METAL CHIP	330K	5%	1/16W	
R750	1-216-841-11	METAL CHIP	47K	5%	1/16W	
R751	1-216-809-11	METAL CHIP	100	5%	1/16W	
R752	1-216-821-11	METAL CHIP	1K	5%	1/16W	
R753	1-216-845-11	METAL CHIP	100K	5%	1/16W	
R754	1-216-848-11	METAL CHIP	180K	5%	1/16W	
R755	1-216-855-11	METAL CHIP	680K	5%	1/16W	
R756	1-216-848-11	METAL CHIP	180K	5%	1/16W	
R757	1-216-833-11	METAL CHIP	10K	5%	1/16W	
R758	1-216-837-11	METAL CHIP	22K	5%	1/16W	
R759	1-216-837-11	METAL CHIP	22K	5%	1/16W	
R760	1-216-826-11	METAL CHIP	2.7K	5%	1/16W	
R761	1-216-842-11	METAL CHIP	56K	5%	1/16W	
R762	1-216-842-11	METAL CHIP	56K	5%	1/16W	
R764	1-216-828-11	METAL CHIP	3.9K	5%	1/16W	
R765	1-216-833-11	METAL CHIP	10K	5%	1/16W	(TR82/TR400/TR550/TR750)
R766	1-216-835-11	METAL CHIP	15K	5%	1/16W	(TR82/TR400/TR550/TR750)
R767	1-216-850-11	METAL CHIP	270K	5%	1/16W	(TR82/TR400/TR550/TR750)
R768	1-216-833-11	METAL CHIP	10K	5%	1/16W	(TR82/TR400/TR550/TR750)
R769	1-216-850-11	METAL CHIP	270K	5%	1/16W	(TR82/TR400/TR550/TR750)
R770	1-216-835-11	METAL CHIP	15K	5%	1/16W	(TR82/TR400/TR550/TR750)
R771	1-216-803-11	METAL CHIP	33	5%	1/16W	(TR82/TR400/TR550/TR750)

Ref. No.	Part No.	Description				Remark
R644	1-216-833-11	METAL CHIP	10K	5%	1/16W	
R645	1-216-834-11	METAL CHIP	15K	5%	1/16W	
R646	1-216-818-11	METAL CHIP	560	5%	1/16W	
R647	1-216-834-11	METAL CHIP	12K	5%	1/16W	
R648	1-216-818-11	METAL CHIP	560	5%	1/16W	
R649	1-216-841-11	METAL CHIP	47K	5%	1/16W	
R650	1-216-827-11	METAL CHIP	3.3K	5%	1/16W	
R651	1-216-837-11	METAL CHIP	8.2K	5%	1/16W	
R652	1-219-841-11	METAL CHIP	47K	5%	1/16W	
R653	1-216-864-11	METAL CHIP	0	5%	1/16W	
R656	1-216-864-11	METAL CHIP	0	5%	1/16W	(TR42/TR70/TR72/TR80/TR430)
R657	1-216-864-11	METAL CHIP	0	5%	1/16W	(TR82/TR400/TR550/TR750)
R658	1-216-864-11	METAL CHIP	0	5%	1/16W	
R659	1-216-823-11	METAL CHIP	1.5K	5%	1/16W	
R661	1-216-841-11	METAL CHIP	47K	5%	1/16W	
R662	1-216-821-11	METAL CHIP	1K	5%	1/16W	
R663	1-216-825-11	METAL CHIP	2.2K	5%	1/16W	
R664	1-216-821-11	METAL CHIP	1K	5%	1/16W	
R665	1-216-825-11	METAL CHIP	2.2K	5%	1/16W	
R666	1-216-827-11	METAL CHIP	3.3K	5%	1/16W	
R667	1-216-820-11	METAL CHIP	820	5%	1/16W	
R668	1-216-824-11	METAL CHIP	1.8K	5%	1/16W	
R669	1-216-825-11	METAL CHIP	2.2K	5%	1/16W	(TR42/TR72/TR82/TR430/TR550)
R670	1-216-825-11	METAL CHIP	2.2K	5%	1/16W	(TR42/TR72/TR82/TR430/TR550)
R701	1-216-857-11	METAL CHIP	1M	5%	1/16W	
R702	1-216-833-11	METAL CHIP	10K	5%	1/16W	
R703	1-216-845-11	METAL CHIP	100K	5%	1/16W	
R704	1-216-840-11	METAL CHIP	82K	5%	1/16W	(TR42/TR82/TR400/TR550/TR750)
R705	1-216-827-11	METAL CHIP	3.3K	5%	1/16W	
R709	1-216-845-11	METAL CHIP	100K	5%	1/16W	
R710	1-216-864-11	METAL CHIP	0	5%	1/16W	(TR42/TR70/TR72/TR80/TR430)
R711	1-216-864-11	METAL CHIP	0	5%	1/16W	(TR82/TR400/TR550/TR750)
R712	1-216-864-11	METAL CHIP	0	5%	1/16W	(TR42/TR72/TR72/TR80/TR430)
R713	1-216-807-11	METAL CHIP	68	5%	1/16W	
R714	1-216-864-11	METAL CHIP	0	5%	1/16W	
R715	1-216-864-11	METAL CHIP	0	5%	1/16W	(TR82/TR400/TR550/TR750)
R716	1-216-847-11	METAL CHIP	1K	0.50%	1/16W	
R717	1-216-864-11	METAL CHIP	0	5%	1/16W	(TR82/TR400/TR550/TR750)
R718	1-216-807-11	METAL CHIP	68	5%	1/16W	
R719	1-216-876-11	METAL CHIP	16K	0.50%	1/16W	
R720	1-216-841-11	METAL CHIP	47K	5%	1/16W	(TR42)
R720	1-216-843-11	METAL CHIP	68K	5%	1/16W	(TR82/TR400/TR550/TR750)
R720	1-216-844-11	METAL CHIP	82K	5%	1/16W	(TR70/TR72/TR80/TR430)
R721	1-216-864-11	METAL CHIP	0	5%	1/16W	(TR42/TR82/TR400/TR550/TR750)
R722	1-216-864-11	METAL CHIP	0	5%	1/16W	(TR42/TR82/TR400/TR550/TR750)
R723	1-216-864-11	METAL CHIP	0	5%	1/16W	(TR70/TR72/TR80/TR430)
R724	1-216-864-11	METAL CHIP	0	5%	1/16W	(TR42/TR82/TR400/TR550/TR750)
R725	1-216-841-11	METAL CHIP	47K	5%	1/16W	
R726	1-216-864-11	METAL CHIP	0	5%	1/16W	(TR42)
R740	1-216-864-11	METAL CHIP	0	5%	1/16W	(TR70/TR72/TR80/TR82/TR400/TR430/TR550/TR750)
R741	1-216-855-11	METAL CHIP	2.2K	0.50%	1/16W	
R743	1-216-865-11	METAL CHIP	5.6K	0.50%	1/16W	
R743	1-216-833-11	METAL CHIP	10K	5%	1/16W	
R744	1-216-837-11	METAL CHIP	3.3K	5%	1/16W	
R745	1-216-837-11	METAL CHIP	22K	5%	1/16W	
R746	1-216-837-11	METAL CHIP	22K	5%	1/16W	
R747	1-216-820-11	METAL CHIP	820	5%	1/16W	
R748	1-216-828-11	METAL CHIP	3.9K	5%	1/16W	
R749	1-216-851-11	METAL CHIP	390K	5%	1/16W	
R750	1-216-841-11	METAL CHIP	47K	5%	1/16W	
R751	1-216-809-11	METAL CHIP	100	5%	1/16W	
R752	1-216-821-11	METAL CHIP	1K	5%	1/16W	
R753	1-216-845-11	METAL CHIP	100K	5%	1/16W	
R754	1-216-849-11	METAL CHIP	180K	5%	1/16W	
R755	1-216-855-11	METAL CHIP	390K	5%	1/16W	
R756	1-216-849-11	METAL CHIP	180K	5%	1/16W	
R757	1-216-833-11	METAL CHIP	10K	5%	1/16W	
R758	1-216-837-11	METAL CHIP	22K	5%	1/16W	
R759	1-216-837-11	METAL CHIP	22K	5%	1/16W	
R760	1-216-829-11	METAL CHIP	2.7K	5%	1/16W	
R761	1-216-843-11	METAL CHIP	56K	5%	1/16W	
R762	1-216-843-11	METAL CHIP	56K	5%	1/16W	
R764	1-216-828-11	METAL CHIP	3.9K	5%	1/16W	
R765	1-216-833-11	METAL CHIP	10K	5%	1/16W	(TR82/TR400/TR550/TR750)
R766	1-216-835-11	METAL CHIP	15K	5%	1/16W	(TR82/TR400/TR550/TR750)
R767	1-216-850-11	METAL CHIP	270K	5%	1/16W	(TR82/TR400/TR550/TR750)
R768	1-216-833-11	METAL CHIP	10K	5%	1/16W	(TR82/TR400/TR550/TR750)
R769	1-216-850-11	METAL CHIP	270K	5%	1/16W	(TR82/TR400/TR550/TR750)
R770	1-216-835-11	METAL CHIP	15K	5%	1/16W	(TR82/TR400/TR550/TR750)
R771	1-216-809-11	METAL CHIP	33	5%	1/16W	(TR82/TR400/TR550/TR750)

Ref. No.	Part No.	Description	Remark
R772	1-216-837-11	METAL CHIP 22K 5% 1/16W (TR82/TR400/TR550/TR750)	
R773	1-216-837-11	METAL CHIP 22K 5% 1/16W (TR82/TR400/TR550/TR750)	
R774	1-216-837-11	METAL CHIP 22K 5% 1/16W (TR82/TR400/TR550/TR750)	
R775	1-216-837-11	METAL CHIP 22K 5% 1/16W (TR82/TR400/TR550/TR750)	
R776	1-216-837-11	METAL CHIP 22K 5% 1/16W (TR82/TR400/TR550/TR750)	
R777	1-216-837-11	METAL CHIP 22K 5% 1/16W (TR82/TR400/TR550/TR750)	
R778	1-216-833-11	METAL CHIP 10K 5% 1/16W (TR82/TR400/TR550/TR750)	
R779	1-218-911-11	METAL CHIP 470K 0.50% 1/16W (TR82/TR400/TR550/TR750)	
R780	1-218-911-11	METAL CHIP 470K 0.50% 1/16W (TR82/TR400/TR550/TR750)	
R781	1-216-833-11	METAL CHIP 10K 5% 1/16W (TR82/TR400/TR550/TR750)	
R782	1-218-911-11	METAL CHIP 470K 0.50% 1/16W (TR82/TR400/TR550/TR750)	
R783	1-218-911-11	METAL CHIP 470K 0.50% 1/16W (TR82/TR400/TR550/TR750)	
R786	1-216-841-11	METAL CHIP 47K 5% 1/16W (TR82/TR400/TR550/TR750)	
R787	1-216-841-11	METAL CHIP 47K 5% 1/16W (TR82/TR400/TR550/TR750)	
R788	1-216-841-11	METAL CHIP 47K 5% 1/16W (TR82/TR400/TR550/TR750)	
R789	1-216-841-11	METAL CHIP 47K 5% 1/16W (TR82/TR400/TR550/TR750)	
R790	1-216-833-11	METAL CHIP 10K 5% 1/16W (TR82/TR400/TR550/TR750)	
R791	1-216-864-11	METAL CHIP 0 5% 1/16W (TR82/TR400/TR550/TR750)	
R792	1-216-857-11	METAL CHIP 1M 5% 1/16W (TR82/TR400/TR550/TR750)	
R793	1-216-841-11	METAL CHIP 47K 5% 1/16W (TR82/TR400/TR550/TR750)	
		< VIBRATOR >	
X601	1-760-081-21	VIBRATOR, CERAMIC (24MHz)	
X701	1-760-320-11	VIBRATOR, CRYSTAL (28.6363MHz)	
X775	1-579-553-11	VIBRATOR (12MHz) (TR82/TR400/TR550/TR750)	

****

* A-7063-957-A VF-65 BOARD, COMPLETE
****
(TR42/TR72/TR82/TR400/TR430/TR550/TR750)
(Ref. No. 8,000 Series)

Ref. No.	Part No.	Description	Remark
		< CAPACITOR >	
C901	1-124-635-00	ELECT 220uF 20% 6.3V	
C902	1-163-038-11	CERAMIC CHIP 0.1uF 25V	
C903	1-135-091-21	TANTAL. CHIP 1uF 20% 16V	
C904	1-163-011-11	CERAMIC CHIP 0.0015uF 10% 50V	
C905	1-104-753-11	TANTAL. CHIP 47uF 20% 6.3V	
C906	1-162-638-11	CERAMIC CHIP 1uF 16V	
C907	1-137-306-11	FILM CHIP 0.1uF 5% 16V	
C908	1-163-109-00	CERAMIC CHIP 47PF 5% 50V	
C909	1-163-009-11	CERAMIC CHIP 0.001uF 10% 50V	
⚠C910	1-164-758-11	CERAMIC CHIP 0.0039uF 5% 50V	
⚠C911	1-164-715-11	CERAMIC CHIP 0.0068uF 5% 50V	
C912	1-127-532-11	ELECT(SOLID) 47uF 20% 6.3V	
C913	1-124-577-11	ELECT 82uF 20% 10V	
C914	1-128-007-11	ELECT CHIP 2.2uF 20% 35V	
C915	1-163-037-11	CERAMIC CHIP 0.022uF 10% 25V	
C916	1-164-611-11	CERAMIC CHIP 0.001uF 10% 500V	
		< CONNECTOR >	
CN901	1-566-537-11	CONNECTOR, FPC (NON ZIF) 5P	
CN902	1-573-290-11	PIN, CONNECTOR (1.5MM) (SMD) 4P	
		< DIODE >	
D901	8-719-404-19	DIODE LN1251 (TALLY)	
D903	8-719-400-20	DIODE MA152WA	
		< IC >	
IC901	8-759-196-14	IC BA7149F-E2	
		< COIL >	
L901	1-412-031-11	INDUCTOR CHIP 47uH	
L902	1-410-389-31	INDUCTOR CHIP 47uH	
⚠L903	1-402-680-21	COIL, FERRITE (HLC)	
		< TRANSISTOR >	
⚠Q901	8-729-120-28	TRANSISTOR 2SC1623-L5L6	
Q902	8-729-106-68	TRANSISTOR 2SD1615A-GP	
Q903	8-729-216-31	TRANSISTOR 2SA1163-G	
Q904	8-729-120-28	TRANSISTOR 2SC1623-L5L6	
		< RESISTOR >	
R901	1-216-041-00	METAL CHIP 470 5% 1/10W	
R902	1-216-041-00	METAL CHIP 470 5% 1/10W	
R903	1-216-035-00	METAL CHIP 270 5% 1/10W	
⚠R904	1-216-073-00	METAL CHIP 10K 5% 1/10W	
⚠R905	1-216-051-00	METAL CHIP 1.2K 5% 1/10W	
R906	1-216-047-00	METAL CHIP 820 5% 1/10W	
R907	1-216-097-00	METAL CHIP 100K 5% 1/10W	
R908	1-216-111-00	METAL CHIP 390K 5% 1/10W	
R909	1-216-073-00	METAL CHIP 10K 5% 1/10W	
R910	1-216-077-00	METAL CHIP 15K 5% 1/10W	

The components identified by mark ⚠ or dotted line with mark ⚠ are critical for safety. Replace only with part number specified.	Les composants identifiés par une marque ⚠ sont critiques pour la sécurité. Ne les remplacer que par une piéce portant le numéro spécifié.

Ref. No.	Part No.	Description	Remark
R772	1-216-837-11	METAL CHIP 22K 5% 1/16W (TR32/TR400/TR550/TR750)	
R773	1-216-837-11	METAL CHIP 22K 5% 1/16W (TR32/TR400/TR550/TR750)	
R774	1-216-837-11	METAL CHIP 22K 5% 1/16W (TR32/TR400/TR550/TR750)	
R775	1-216-837-11	METAL CHIP 22K 5% 1/16W (TR32/TR400/TR550/TR750)	
R776	1-216-837-11	METAL CHIP 22K 5% 1/16W (TR32/TR400/TR550/TR750)	
R777	1-216-837-11	METAL CHIP 22K 5% 1/16W (TR32/TR400/TR550/TR750)	
R778	1-216-839-11	METAL CHIP 10K 5% 1/16W (TR32/TR400/TR550/TR750)	
R779	1-216-811-11	METAL CHIP 470K 0.50% 1/16W (TR32/TR400/TR550/TR750)	
R780	1-216-811-11	METAL CHIP 470K 0.50% 1/16W (TR32/TR400/TR550/TR750)	
R781	1-216-833-11	METAL CHIP 10K 5% 1/16W (TR32/TR400/TR550/TR750)	
R782	1-216-811-11	METAL CHIP 470K 0.50% 1/16W (TR32/TR400/TR550/TR750)	
R783	1-216-811-11	METAL CHIP 470K 0.50% 1/16W (TR32/TR400/TR550/TR750)	
R786	1-216-841-11	METAL CHIP 47K 5% 1/16W (TR32/TR400/TR550/TR750)	
R787	1-216-841-11	METAL CHIP 47K 5% 1/16W (TR32/TR400/TR550/TR750)	
R788	1-216-841-11	METAL CHIP 47K 5% 1/16W (TR32/TR400/TR550/TR750)	
R789	1-216-841-11	METAL CHIP 47K 5% 1/16W (TR32/TR400/TR550/TR750)	
R790	1-216-838-11	METAL CHIP 10K 5% 1/16W (TR32/TR400/TR550/TR750)	
R791	1-216-864-11	METAL CHIP 0 5% 1/16W (TR32/TR400/TR550/TR750)	
R792	1-216-857-11	METAL CHIP 1M 5% 1/16W (TR32/TR400/TR550/TR750)	
R793	1-216-841-11	METAL CHIP 47K 5% 1/16W (TR32/TR400/TR550/TR750)	
		< VIBRATOR >	
X601	1-760-081-21	VIBRATOR, CERAMIC (2.0MHz)	
X701	1-760-320-11	VIBRATOR, CRYSTAL (38.6868MHz)	
X715	1-579-553-11	VIBRATOR (1MHz) (TR32/TR400/TR550/TR750)	
**********			
*	A-7063-957-A	VF-65 BOARD, COMPLETE ********** (TR42/TR78/TR32/TR400/TR430/TR550/TR750) (Ref. No. 8,000 Series)	
		< CAPACITOR >	
C901	1-124-635-00	ELECT 220uF 20% 6.3V	

Ref. No.	Part No.	Description				Remark
C902	1-163-038-11	CERAMIC CHIP	0.1uF		25V	
C903	1-135-091-21	TANTAL. CHIP	1uF	20%	16V	
C904	1-163-011-11	CERAMIC CHIP	0.0015uF	10%	50V	
C905	1-104-753-11	TANTAL. CHIP	47uF	20%	6.3V	
C906	1-162-638-11	CERAMIC CHIP	1uF		16V	
C907	1-137-308-11	FILM CHIP	0.1uF	5%	16V	
C908	1-163-109-00	CERAMIC CHIP	47PF	5%	50V	
C909	1-163-009-11	CERAMIC CHIP	0.001uF	10%	50V	
⚠C910	1-164-754-11	CERAMIC CHIP	0.0068uF	5%	50V	
⚠C911	1-164-715-11	CERAMIC CHIP	0.0068uF	5%	50V	
C912	1-137-632-11	ELECT(SOLID)	47uF	20%	6.3V	
C913	1-124-577-11	ELECT	22uF	20%	10V	
C914	1-123-007-11	ELECT CHIP	2.2uF	20%	35V	
C915	1-163-037-11	CERAMIC CHIP	0.022uF	10%	25V	
C916	1-164-611-11	CERAMIC CHIP	0.001uF	10%	50CV	
		< CONNECTOR >				
CN601	1-500-537-11	CONNECTOR, FPC (NON ZIF) SP				
CN603	1-573-290-11	PIN CONNECTOR (1.5MM) (SMD)4P				
		< DIODE >				
D901	8-719-404-19	DIODE LR1251 (TALLY)				
D903	8-719-400-20	DIODE MA150WA				
		< IC >				
IC301	8-759-198-14	IC BA7149F-E2				
		< COIL >				
L901	1-418-831-11	INDUCTOR CHIP 47nH				
L902	1-418-989-31	INDUCTOR CHIP 47nH				
⚠L903	1-408-680-21	COIL, FERRITE (HLC)				
		< TRANSISTOR >				
⚠Q801	8-729-120-85	TRANSISTOR 2SC1623-L5L6				
Q802	8-729-106-68	TRANSISTOR 2SD1815A-GP				
Q803	8-729-216-31	TRANSISTOR 2SA1188-G				
Q804	8-729-120-85	TRANSISTOR 2SC1623-L5L6				
		< RESISTOR >				
R901	1-216-041-00	METAL CHIP	470	5%	1/10W	
R902	1-216-041-00	METAL CHIP	470	5%	1/10W	
R903	1-216-035-00	METAL CHIP	270	5%	1/10W	
⚠R904	1-216-073-00	METAL CHIP	10K	5%	1/10W	
⚠R905	1-216-051-00	METAL CHIP	1.2K	5%	1/10W	
R906	1-216-047-00	METAL CHIP	820	5%	1/10W	
R907	1-216-097-00	METAL CHIP	100K	5%	1/10W	
R908	1-216-111-00	METAL CHIP	390K	5%	1/10W	
R909	1-216-073-00	METAL CHIP	10K	5%	1/10W	
R910	1-216-077-00	METAL CHIP	15K	5%	1/10W	

The components identified by mark ⚠ or dotted line with mark ⚠ are critical for safety.
Replace only with part number specified.

Les composants identifiés par une marque ⚠ sont critiques pour la sécurité.
Ne les remplacer que par une pièce portant le numéro spécifié.

Ref. No.	Part No.	Description				Remark
R911	1-216-160-00	METAL GLAZE	27	5%	1/8W	
R912	1-216-121-00	METAL CHIP	1M	5%	1/10W	
R913	1-216-055-00	METAL CHIP	1.8K	5%	1/10W	
R914	1-216-025-00	METAL CHIP	100	5%	1/10W	
R915	1-216-308-00	METAL CHIP	4.7	5%	1/10W	
R916	1-216-683-11	METAL CHIP	22K	0.5%	1/10W	
R917	1-216-693-11	METAL CHIP	56K	0.5%	1/10W	
R918	1-216-069-00	METAL CHIP	6.8K	5%	1/10W	
R919	1-216-689-11	METAL CHIP	39K	0.5%	1/10W	
R920	1-216-689-11	METAL CHIP	39K	0.5%	1/10W	
R921	1-216-311-00	METAL CHIP	6.8	5%	1/10W	
R922	1-216-101-00	METAL CHIP	150K	5%	1/10W	
R923	1-216-121-00	METAL CHIP	1M	5%	1/10W	
R924	1-216-131-11	METAL CHIP	2.7M	5%	1/10W	
R925	1-216-131-11	METAL CHIP	2.7M	5%	1/10W	
R926	1-216-295-00	METAL CHIP	0	5%	1/10W	
R927	1-216-049-00	METAL CHIP	1K	5%	1/10W	
R928	1-216-053-00	METAL CHIP	1.5K	5%	1/10W	
		< VARIABLE RESISTOR >				
RV903	1-238-086-11	RES, ADJ, CERMET	470			
RV904	1-223-566-11	RES, ADJ, METAL GLAZE	1M			
		< TRANSFORMER >				
⚠T901	1-453-124-11	TRANSFORMER ASSY, FLYBACK				
		< THERMISTOR >				
TH901	1-809-350-21	THERMISTOR, NTC (2125)				
		< SOCKET >				
⚠W901	1-540-019-21	SOCKET ASSY, CRT				

****

* A-7066-010-A VF-66 BOARD, COMPLETE (TR70/TR80)
****
(Ref. No. 4,000 Series)

Ref. No.	Part No.	Description				Remark
		< CAPACITOR >				
C851	1-162-967-11	CERAMIC CHIP	0.0033uF	10%	50V	
C852	1-162-974-11	CERAMIC CHIP	0.01uF		50V	
C853	1-104-916-11	TANTAL. CHIP	6.8uF	20%	20V	
C854	1-164-227-11	CERAMIC CHIP	0.022uF	10%	25V	
C855	1-162-974-11	CERAMIC CHIP	0.01uF		50V	
C856	1-135-181-21	TANTALUM CHIP	4.7uF	20%	6.3V	
C857	1-164-676-11	CERAMIC CHIP	2200PF	5%	16V	
C858	1-135-181-21	TANTALUM CHIP	4.7uF	20%	6.3V	
C859	1-164-227-11	CERAMIC CHIP	0.022uF	10%	25V	
C860	1-164-232-11	CERAMIC CHIP	0.01uF		50V	
C861	1-104-917-11	TANTAL. CHIP	15uF	20%	20V	
C862	1-165-178-11	CERAMIC CHIP	6.8uF		16V	
C863	1-163-020-00	CERAMIC CHIP	0.0082uF	10%	50V	
C864	1-163-020-00	CERAMIC CHIP	0.0082uF	10%	50V	
C865	1-162-921-11	CERAMIC CHIP	33PF	5%	50V	
C866	1-162-974-11	CERAMIC CHIP	0.01uF		50V	
C867	1-135-177-21	TANTALUM CHIP	1uF	20%	20V	
C868	1-165-128-11	CERAMIC CHIP	0.22uF		16V	
C869	1-163-020-00	CERAMIC CHIP	0.0082uF	10%	50V	
C870	1-162-974-11	CERAMIC CHIP	0.01uF		50V	
		< CONNECTOR >				
CN851	1-573-354-11	CONNECTOR, FFC/FPC 14P				
CN852	1-573-354-11	CONNECTOR, FFC/FPC 14P				
CN853	1-573-811-11	CONNECTOR, BOARD TO BOARD 12P				
		< DIODE >				
D851	8-719-404-19	DIODE	LN1251C (TALLY)			
D852	8-719-043-70	DIODE	MA6S121			
D853	8-719-802-36	DIODE	1SS250			
		< IC >				
IC851	8-759-097-75	IC	MB3789PFV-G-BND-ER			
IC852	8-759-508-68	IC	XRA10358F-E2			
		< COIL >				
L851	1-412-033-11	INDUCTOR CHIP 220uH				
L852	1-412-029-11	INDUCTOR CHIP 10uH				
L853	1-412-033-11	INDUCTOR CHIP 220uH				
		< TRANSISTOR >				
Q851	8-729-024-60	TRANSISTOR	MTD6N15T4			
Q852	8-729-402-84	TRANSISTOR	XN4601			
Q853	8-729-923-62	TRANSISTOR	DTA123JK			
		< RESISTOR >				
R851	1-216-819-11	METAL CHIP	680	5%	1/16W	
R852	1-216-841-11	METAL CHIP	47K	5%	1/16W	
R853	1-218-899-11	METAL CHIP	150K	0.50%	1/16W	
R854	1-218-901-11	METAL CHIP	180K	0.50%	1/16W	
R855	1-216-840-11	METAL CHIP	39K	5%	1/16W	
R856	1-218-899-11	METAL CHIP	150K	0.50%	1/16W	
R857	1-218-903-11	METAL CHIP	220K	0.50%	1/16W	
R858	1-216-841-11	METAL CHIP	47K	5%	1/16W	
R859	1-216-849-11	METAL CHIP	220K	5%	1/16W	
R860	1-216-843-11	METAL CHIP	68K	5%	1/16W	
R861	1-216-843-11	METAL CHIP	68K	5%	1/16W	
R862	1-216-838-11	METAL CHIP	27K	5%	1/16W	
R863	1-216-847-11	METAL CHIP	150K	5%	1/16W	
R864	1-216-840-11	METAL CHIP	39K	5%	1/16W	
R865	1-216-841-11	METAL CHIP	47K	5%	1/16W	

The components identified by mark ⚠ or dotted line with mark ⚠ are critical for safety. Replace only with part number specified.	Les composants identifiés par une marque ⚠ sont critiques pour la sécurité. Ne les remplacer que par une piéce portant le numéro spécifié.

Ref. No.	Part No.	Description				Remark
R911	1-216-160-00	METAL GLAZE	27	5%	1/8W	
R912	1-216-121-00	METAL CHIP	1M	5%	1/10W	
R913	1-216-055-00	METAL CHIP	1.8K	5%	1/10W	
R914	1-216-025-00	METAL CHIP	100	5%	1/10W	
R915	1-216-304-00	METAL CHIP	4.7	5%	1/10W	
R916	1-216-883-11	METAL CHIP	22K	0.5%	1/10W	
R917	1-216-893-11	METAL CHIP	56K	0.5%	1/10W	
R918	1-216-069-00	METAL CHIP	6.8K	5%	1/10W	
R919	1-216-889-11	METAL CHIP	39K	0.5%	1/10W	
R920	1-216-889-11	METAL CHIP	39K	0.5%	1/10W	
R921	1-216-311-00	METAL CHIP	6.8	5%	1/10W	
R922	1-216-101-00	METAL CHIP	150K	5%	1/10W	
R923	1-216-121-00	METAL CHIP	1K	5%	1/10W	
R924	1-216-131-11	METAL CHIP	2.7K	5%	1/10W	
R925	1-216-181-11	METAL CHIP	2.7K	5%	1/10W	
R926	1-216-295-00	METAL CHIP	0	5%	1/10W	
R927	1-216-049-00	METAL CHIP	1K	5%	1/10W	
R928	1-216-053-00	METAL CHIP	1.5K	5%	1/10W	
		< VARIABLE RESISTOR >				
RV903	1-238-089-11	RES, ADJ, CERMET	470			
RV904	1-223-586-11	RES, ADJ, METAL GLAZE	1M			
		< TRANSFORMER >				
⚠T901	1-453-124-11	TRANSFORMER ASSY, FLYBACK				
		< THERMISTOR >				
TH901	1-809-350-21	THERMISTOR, NTC (2125)				
		< SOCKET >				
⚠J901	1-540-010-21	SOCKET ASSY, CRT				

##

*	A-7056-010-A	VF-66 BOARD, COMPLETE (TR70/TR80) ##################### (Ref. No. 4,000 Series)	

Ref. No.	Part No.	Description				Remark
		< CAPACITOR >				
C851	1-162-967-11	CERAMIC CHIP	0.0033uF	10%	50V	
C852	1-162-974-11	CERAMIC CHIP	0.01uF		50V	
C853	1-104-916-11	TANTAL. CHIP	6.8uF	20%	20V	
C854	1-164-227-11	CERAMIC CHIP	0.022uF	10%	25V	
C855	1-162-974-11	CERAMIC CHIP	0.01uF		50V	
C856	1-135-181-21	TANTALUM CHIP	4.7uF	20%	6.3V	
C857	1-164-676-11	CERAMIC CHIP	2200PF	5%	16V	
C858	1-135-181-21	TANTALUM CHIP	4.7uF	20%	6.3V	
C859	1-164-227-11	CERAMIC CHIP	0.022uF	10%	25V	
C860	1-164-232-11	CERAMIC CHIP	0.01uF		50V	
C861	1-104-917-11	TANTAL. CHIP	15uF	20%	20V	
C862	1-165-176-11	CERAMIC CHIP	6.8uF		16V	
C863	1-163-020-00	CERAMIC CHIP	0.0082uF	10%	50V	
C864	1-163-020-00	CERAMIC CHIP	0.0082uF	10%	50V	
C865	1-162-921-11	CERAMIC CHIP	33PF	5%	50V	
C866	1-162-974-11	CERAMIC CHIP	0.01uF		50V	
C867	1-135-177-21	TANTALUM CHIP	1uF	20%	35V	
C868	1-165-128-11	CERAMIC CHIP	0.22uF		16V	
C869	1-163-037-00	CERAMIC CHIP	0.0082uF	10%	50V	
C870	1-162-974-11	CERAMIC CHIP	0.01uF		50V	
		< CONNECTOR >				
CN851	1-573-364-11	CONNECTOR, FFC/FPC 14P				
CN852	1-573-364-11	CONNECTOR, FFC/FPC 14P				
CN853	1-573-811-11	CONNECTOR, BOARD TO BOARD 12P				
		< DIODE >				
D851	8-719-404-19	DIODE	LN1351C (TALLY)			
D852	8-719-042-70	DIODE	MA8S121			
D853	8-719-802-36	DIODE	1SS250			
		< IC >				
IC851	8-759-097-75	IC	MB3789PFV-G-BND-ER			
IC852	8-759-508-88	IC	XRA10358P-E8			
		< COIL >				
L851	1-412-033-11	INDUCTOR CHIP 220uH				
L852	1-412-020-11	INDUCTOR CHIP 10uH				
L853	1-412-033-11	INDUCTOR CHIP 220uH				
		< TRANSISTOR >				
Q851	8-729-024-60	TRANSISTOR	MTD9N15T4			
Q852	8-729-402-84	TRANSISTOR	XN4601			
Q853	8-729-023-62	TRANSISTOR	DTA123JK			
		< RESISTOR >				
R851	1-218-819-11	METAL CHIP	680	5%	1/16W	
R852	1-216-841-11	METAL CHIP	47K	5%	1/16W	
R853	1-218-899-11	METAL CHIP	150K	0.50%	1/16W	
R854	1-218-901-11	METAL CHIP	180K	0.50%	1/16W	
R855	1-216-840-11	METAL CHIP	39K	5%	1/16W	
R856	1-218-899-11	METAL CHIP	150K	0.50%	1/16W	
R857	1-218-903-11	METAL CHIP	220K	0.50%	1/16W	
R858	1-216-841-11	METAL CHIP	47K	5%	1/16W	
R859	1-216-849-11	METAL CHIP	220K	5%	1/16W	
R860	1-216-843-11	METAL CHIP	68K	5%	1/16W	
R861	1-216-843-11	METAL CHIP	68K	5%	1/16W	
R862	1-216-838-11	METAL CHIP	27K	5%	1/16W	
R863	1-216-847-11	METAL CHIP	150K	5%	1/16W	
R864	1-216-840-11	METAL CHIP	39K	5%	1/16W	
R865	1-216-841-11	METAL CHIP	47K	5%	1/16W	

The components identified by mark ⚠ or dotted line with mark ⚠ are critical for safety. Replace only with part number specified.	Les composants identifiés par une marque ⚠ sont critiques pour la sécurité. Ne les remplacer que par une pièce portant le numéro spécifié.

Ref. No.	Part No.	Description				Remark
R867	1-216-850-11	METAL CHIP	270K	5%	1/16W	
R868	1-216-864-11	METAL CHIP	0	5%	1/16W	
R869	1-216-843-11	METAL CHIP	68K	5%	1/16W	
R870	1-216-842-11	METAL CHIP	56K	5%	1/16W	
R871	1-216-850-11	METAL CHIP	270K	5%	1/16W	
R872	1-216-833-11	METAL CHIP	10K	5%	1/16W	
R873	1-216-851-11	METAL CHIP	330K	5%	1/16W	
R874	1-216-847-11	METAL CHIP	150K	5%	1/16W	
R875	1-216-829-11	METAL CHIP	4.7K	5%	1/16W	
R876	1-216-833-11	METAL CHIP	10K	5%	1/16W	
R877	1-216-794-11	METAL CHIP	5.6	5%	1/16W	
R878	1-216-804-11	METAL CHIP	39	5%	1/16W	
R879	1-216-837-11	METAL CHIP	22K	5%	1/16W	
R880	1-216-839-11	METAL CHIP	33K	5%	1/16W	
R881	1-216-853-11	METAL CHIP	470K	5%	1/16W	
R891	1-216-296-00	METAL CHIP	0	5%	1/8W	
		< TRANSFORMER >				
⚠T851	0-396-458-00					

****

* A-7066-011-A VF-67 BOARD, COMPLETE (TR70/TR80)
****

< CAPACITOR >

Ref. No.	Part No.	Description				Remark
C901	1-162-974-11	CERAMIC CHIP	0.01uF		50V	
C902	1-162-974-11	CERAMIC CHIP	0.01uF		50V	
C903	1-162-974-11	CERAMIC CHIP	0.01uF		50V	
C904	1-135-259-11	TANTAL. CHIP	10uF	20%	6.3V	
C905	1-135-091-21	TANTAL. CHIP	1uF	20%	16V	
C906	1-162-969-11	CERAMIC CHIP	0.0068uF	10%	25V	
C907	1-135-091-21	TANTAL. CHIP	1uF	20%	16V	
C908	1-162-919-11	CERAMIC CHIP	22PF	5%	50V	
C909	1-162-974-11	CERAMIC CHIP	0.01uF		50V	
C910	1-162-974-11	CERAMIC CHIP	0.01uF		50V	
C911	1-135-259-11	TANTAL. CHIP	10uF	20%	6.3V	
C913	1-164-156-11	CERAMIC CHIP	0.1uF		25V	
C914	1-162-974-11	CERAMIC CHIP	0.01uF		50V	
C915	1-162-974-11	CERAMIC CHIP	0.01uF		50V	
C916	1-162-974-11	CERAMIC CHIP	0.01uF		50V	
C917	1-162-974-11	CERAMIC CHIP	0.01uF		50V	
C920	1-165-176-11	CERAMIC CHIP	0.047uF	10%	16V	
C921	1-162-974-11	CERAMIC CHIP	0.01uF		50V	
C925	1-164-156-11	CERAMIC CHIP	0.1uF		25V	
C926	1-135-181-21	TANTALUM CHIP	4.7uF	20%	6.3V	
C927	1-162-974-11	CERAMIC CHIP	0.01uF		50V	
C928	1-164-344-11	CERAMIC CHIP	0.068uF	10%	25V	
C929	1-164-344-11	CERAMIC CHIP	0.068uF	10%	25V	
C930	1-164-344-11	CERAMIC CHIP	0.068uF	10%	25V	
C931	1-162-974-11	CERAMIC CHIP	0.01uF		50V	
C932	1-162-974-11	CERAMIC CHIP	0.01uF		50V	
C933	1-164-156-11	CERAMIC CHIP	0.1uF		25V	
C934	1-135-145-11	TANTALUM CHIP	0.47uF	10%	35V	
C935	1-135-179-21	TANTAL. CHIP	2.2uF	20%	16V	
C936	1-162-967-11	CERAMIC CHIP	0.0033uF	10%	50V	
C937	1-135-181-21	TANTALUM CHIP	4.7uF	20%	6.3V	
C938	1-162-970-11	CERAMIC CHIP	0.01uF	10%	25V	
C939	1-135-259-11	TANTAL. CHIP	10uF	20%	6.3V	
C940	1-162-927-11	CERAMIC CHIP	100PF	5%	50V	
C941	1-164-357-11	CERAMIC CHIP	1000PF	5%	50V	
C942	1-162-974-11	CERAMIC CHIP	0.01uF		50V	
C943	1-164-156-11	CERAMIC CHIP	0.1uF		25V	
C945	1-162-974-11	CERAMIC CHIP	0.01uF		50V	
C946	1-135-179-21	TANTAL. CHIP	2.2uF	20%	16V	
C947	1-162-974-11	CERAMIC CHIP	0.01uF		50V	
C948	1-162-974-11	CERAMIC CHIP	0.01uF		50V	
C949	1-135-178-11	TANTAL. CHIP	1.5uF	20%	20V	
C950	1-162-974-11	CERAMIC CHIP	0.01uF		50V	
C951	1-162-974-11	CERAMIC CHIP	0.01uF		50V	
C953	1-164-346-11	CERAMIC CHIP	1uF		16V	
C954	1-162-974-11	CERAMIC CHIP	0.01uF		50V	

< CONNECTOR >

Ref. No.	Part No.	Description	Remark
CN901	1-573-354-11	CONNECTOR, FFC/FPC 14P	
* CN902	1-573-984-11	CONNECTOR, BOARD TO BOARD 10P	
* CN903	1-573-356-11	CONNECTOR, FFC/FPC 16P	

< DIODE >

Ref. No.	Part No.	Description	Remark
D901	8-719-025-91	DIODE MA365(E)	
D903	8-719-404-49	DIODE MA111	

< IC >

Ref. No.	Part No.	Description	Remark
IC901	8-752-067-59	IC CXA1785R	
IC902	8-752-362-78	IC CXD2403R	
IC903	8-759-251-40	IC MB88E346PFV-G-BND-ER	

< COIL >

Ref. No.	Part No.	Description	Remark
L901	1-412-951-11	INDUCTOR 10uH	
L902	1-412-962-11	INDUCTOR 82uH	
L904	1-412-951-11	INDUCTOR 10uH	
L905	1-412-949-21	INDUCTOR 6.8uH	
L906	1-412-959-11	INDUCTOR 47uH	

< TRANSISTOR >

Ref. No.	Part No.	Description	Remark
Q901	8-729-402-84	TRANSISTOR XN4601	
Q902	8-729-402-42	TRANSISTOR UN5213	

< RESISTOR >

Ref. No.	Part No.	Description				Remark
R902	1-216-836-11	METAL CHIP	18K	5%	1/16W	
R903	1-216-842-11	METAL CHIP	56K	5%	1/16W	

The components identified by mark ⚠ or dotted line with mark ⚠ are critical for safety. Replace only with part number specified.	Les composants identifiés par une marque ⚠ sont critiques pour la sécurité. Ne les remplacer que par une piéce portant le numéro spécifié.

Ref. No.	Part No.	Description			Remark
R867	1-216-850-11	METAL CHIP	270K	5%	1/16W
R868	1-216-864-11	METAL CHIP	0	5%	1/16W
R869	1-216-845-11	METAL CHIP	68K	5%	1/16W
R870	1-216-842-11	METAL CHIP	56K	5%	1/16W
R871	1-216-850-11	METAL CHIP	270K	5%	1/16W
R872	1-216-833-11	METAL CHIP	12K	5%	1/16W
R873	1-216-851-11	METAL CHIP	330K	5%	1/16W
R874	1-216-847-11	METAL CHIP	150K	5%	1/16W
R875	1-216-829-11	METAL CHIP	4.7K	5%	1/16W
R876	1-216-833-11	METAL CHIP	10K	5%	1/16W
R877	1-216-794-11	METAL CHIP	5.6	5%	1/16W
R878	1-216-804-11	METAL CHIP	39	5%	1/16W
R879	1-216-837-11	METAL CHIP	22K	5%	1/16W
R880	1-216-839-11	METAL CHIP	33K	5%	1/16W
R881	1-216-855-11	METAL CHIP	470K	5%	1/16W
R881	1-216-855-00	METAL CHIP	0	5%	1/8W

< TRANSFORMER >

△T651	0-336-452-00	

****

*	A-7066-011-A	VF-67 BOARD, COMPLETE (TR70/TR80)

****

< CAPACITOR >

Ref. No.	Part No.	Description			Remark
C301	1-163-974-11	CERAMIC CHIP	0.01uF		50V
C302	1-163-974-11	CERAMIC CHIP	0.01uF		50V
C303	1-163-974-11	CERAMIC CHIP	0.01uF		50V
C304	1-135-259-11	TANTAL. CHIP	10uF	20%	6.3V
C305	1-135-091-21	TANTAL. CHIP	1uF	20%	16V
C306	1-162-969-11	CERAMIC CHIP	3.0248uF	10%	25V
C307	1-136-091-21	TANTAL. CHIP	1uF	20%	16V
C308	1-162-919-11	CERAMIC CHIP	22PF	5%	50V
C309	1-162-974-11	CERAMIC CHIP	0.01uF		50V
C310	1-162-974-11	CERAMIC CHIP	0.01uF		50V
C311	1-135-259-11	TANTAL. CHIP	10uF	20%	6.3V
C313	1-164-156-11	CERAMIC CHIP	0.1uF		25V
C314	1-163-974-11	CERAMIC CHIP	0.01uF		50V
C315	1-163-974-11	CERAMIC CHIP	0.01uF		50V
C316	1-163-974-11	CERAMIC CHIP	0.01uF		50V
C317	1-163-974-11	CERAMIC CHIP	0.01uF		50V
C320	1-165-178-11	CERAMIC CHIP	0.047uF	10%	16V
C321	1-163-974-11	CERAMIC CHIP	0.01uF		50V
C325	1-164-156-11	CERAMIC CHIP	0.1uF		25V
C326	1-135-181-21	TANTALUM CHIP	4.7uF	20%	6.3V
C327	1-163-974-11	CERAMIC CHIP	0.01uF		50V
C328	1-164-344-11	CERAMIC CHIP	0.068uF	10%	25V
C329	1-164-344-11	CERAMIC CHIP	0.068uF	10%	25V
C330	1-164-344-11	CERAMIC CHIP	0.068uF	10%	25V
C331	1-163-974-11	CERAMIC CHIP	0.01uF		50V
C332	1-163-974-11	CERAMIC CHIP	0.01uF		50V
C333	1-164-156-11	CERAMIC CHIP	0.1uF		25V
C334	1-135-145-11	TANTALUM CHIP	0.47uF	10%	35V
C335	1-135-179-21	TANTAL. CHIP	2.2uF	20%	16V
C336	1-163-967-11	CERAMIC CHIP	0.0033uF	10%	50V
C337	1-135-181-21	TANTALUM CHIP	4.7uF	20%	6.3V
C338	1-163-970-11	CERAMIC CHIP	0.01uF	10%	25V
C339	1-135-259-11	TANTAL. CHIP	10uF	20%	6.3V
C340	1-163-927-11	CERAMIC CHIP	100PF	5%	50V
C341	1-164-357-11	CERAMIC CHIP	1000PF	5%	50V
C342	1-163-974-11	CERAMIC CHIP.	0.01uF		50V
C343	1-164-156-11	CERAMIC CHIP	0.1uF		25V
C345	1-163-974-11	CERAMIC CHIP	0.01uF		50V
C346	1-135-179-21	TANTAL. CHIP	2.2uF	20%	16V
C347	1-163-974-11	CERAMIC CHIP	0.01uF		50V
C348	1-163-974-11	CERAMIC CHIP	0.01uF		50V
C349	1-135-178-11	TANTAL. CHIP	1.5uF	20%	20V
C350	1-163-974-11	CERAMIC CHIP	0.01uF		50V
C361	1-163-974-11	CERAMIC CHIP	0.01uF		50V
C363	1-164-346-11	CERAMIC CHIP	1uF		16V
C364	1-163-974-11	CERAMIC CHIP	0.01uF		50V

< CONNECTOR >

CN901	1-573-854-11	CONNECTOR, FPC/FPC 14P
* CN902	1-573-864-11	CONNECTOR, BOARD TO BOARD 10P
* CN903	1-573-868-11	CONNECTOR, FPC/FPC 16P

< DIODE >

D601	8-719-025-91	DIODE MA166(K)
D608	8-719-404-49	DIODE MA111

< IC >

IC301	8-759-087-59	IC CXA1785R
IC302	8-759-362-78	IC CXD2403R
IC903	8-759-351-40	IC M34E024FFV-G-GHD-GR

< COIL >

L801	1-412-961-11	INDUCTOR 10uH
L802	1-412-962-11	INDUCTOR 22uH
L804	1-412-951-11	INDUCTOR 10uH
L805	1-412-949-11	INDUCTOR 6.8uH
L806	1-412-959-11	INDUCTOR 47uH

< TRANSISTOR >

Q901	8-729-422-84	TRANSISTOR 2SA601
Q902	8-729-422-42	TRANSISTOR 2SK212

< RESISTOR >

R908	1-216-836-11	METAL CHIP	18K	5%	1/16W
R909	1-216-845-11	METAL CHIP	56K	5%	1/16W

The components identified by mark △ or dotted line with mark △ are critical for safety.
Replace only with part number specified.

Les composants identifiés par une marque △ sont critiques pour la sécurité.
Ne les remplacer que par une pièce portant le numéro spécifié.

Ref. No.	Part No.	Description				Remark
R904	1-216-857-11	METAL CHIP	1M	5%	1/16W	
R906	1-216-841-11	METAL CHIP	47K	5%	1/16W	
R907	1-216-833-11	METAL CHIP	10K	5%	1/16W	
R908	1-216-821-11	METAL CHIP	1K	5%	1/16W	
R910	1-216-814-11	METAL CHIP	270	5%	1/16W	
R911	1-216-864-11	METAL CHIP	0	5%	1/16W	
R912	1-216-821-11	METAL CHIP	1K	5%	1/16W	
R913	1-220-397-11	METAL GLAZE	4.7M	5%	1/16W	
R914	1-216-832-11	METAL CHIP	8.2K	5%	1/16W	
R919	1-216-839-11	METAL CHIP	33K	5%	1/16W	
R920	1-216-839-11	METAL CHIP	33K	5%	1/16W	
R921	1-216-857-11	METAL CHIP	1M	5%	1/16W	
R922	1-216-839-11	METAL CHIP	33K	5%	1/16W	
R923	1-216-839-11	METAL CHIP	33K	5%	1/16W	
R924	1-216-864-11	METAL CHIP	0	5%	1/16W	
R925	1-216-830-11	METAL CHIP	5.6K	5%	1/16W	
R926	1-216-832-11	METAL CHIP	8.2K	5%	1/16W	
R930	1-216-833-11	METAL CHIP	10K	5%	1/16W	
R931	1-216-839-11	METAL CHIP	33K	5%	1/16W	
R933	1-216-864-11	METAL CHIP	0	5%	1/16W	
R934	1-216-821-11	METAL CHIP	1K	5%	1/16W	
R936	1-218-873-11	METAL CHIP	12K	0.50%	1/16W	
R937	1-218-905-11	METAL CHIP	270K	0.50%	1/16W	
R938	1-216-849-11	METAL CHIP	220K	5%	1/16W	
R939	1-216-837-11	METAL CHIP	22K	5%	1/16W	
R946	1-216-839-11	METAL CHIP	33K	5%	1/16W	
R947	1-216-807-11	METAL CHIP	68	5%	1/16W	
R948	1-216-807-11	METAL CHIP	68	5%	1/16W	
R949	1-216-807-11	METAL CHIP	68	5%	1/16W	
R953	1-216-840-11	METAL CHIP	39K	5%	1/16W	
R954	1-216-840-11	METAL CHIP	39K	5%	1/16W	
R959	1-216-844-11	METAL CHIP	82K	5%	1/16W	
R960	1-216-845-11	METAL CHIP	100K	5%	1/16W	
R961	1-216-850-11	METAL CHIP	270K	5%	1/16W	
R969	1-216-839-11	METAL CHIP	33K	5%	1/16W	
R970	1-216-839-11	METAL CHIP	33K	5%	1/16W	
R971	1-216-844-11	METAL CHIP	82K	5%	1/16W	
R973	1-216-839-11	METAL CHIP	33K	5%	1/16W	
R974	1-216-839-11	METAL CHIP	33K	5%	1/16W	

< VIBRATOR >

X901	1-579-466-11	VIBRATOR, CRYSTAL (3.58MHz)				

****

Ref. No.	Part No.	Description	Remark
*	A-7063-959-A	VS-104 BOARD, COMPLETE (TR72) **********	
*	A-7066-008-A	VS-104 BOARD, COMPLETE (TR80) **********	
*	A-7066-079-A	VS-104 (H) BOARD, COMPLETE (TR400) **********	
*	A-7066-086-A	VS-104 BOARD, COMPLETE (TR430) **********	
*	A-7066-134-A	VS-104 (H) BOARD, COMPLETE (TR750) **********	
*	A-7063-953-A	VS-112 BOARD, COMPLETE (TR82) **********	
*	A-7066-019-A	VS-112 BOARD, COMPLETE (TR70) **********	
*	A-7066-047-A	VS-112 (LL) BOARD, COMPLETE (TR42) **********	
*	A-7066-085-A	VS-112 BOARD, COMPLETE (TR550) **********	

(Ref. No. 30,000 Series)

< CAPACITOR >

C101	1-162-921-11	CERAMIC CHIP	33PF	5%	50V	(TR42/TR70/TR72/TR80/TR82/TR430/TR550)
C102	1-162-911-11	CERAMIC CHIP	6PF	0.5PF	50V	(TR400/TR750)
C102	1-162-922-11	CERAMIC CHIP	39PF	5%	50V	(TR42/TR70/TR72/TR80/TR82/TR430/TR550)
C103	1-162-974-11	CERAMIC CHIP	0.01uF		50V	
C104	1-162-974-11	CERAMIC CHIP	0.01uF		50V	
C106	1-164-004-11	CERAMIC CHIP	0.1uF	10%	25V	
C107	1-162-927-11	CERAMIC CHIP	100PF	5%	50V	
C108	1-162-926-11	CERAMIC CHIP	82PF	5%	50V	
C109	1-164-227-11	CERAMIC CHIP	0.022uF	10%	25V	
C110	1-164-227-11	CERAMIC CHIP	0.022uF	10%	25V	
C111	1-162-974-11	CERAMIC CHIP	0.01uF		50V	
C112	1-162-927-11	CERAMIC CHIP	100PF	5%	50V	
C113	1-164-217-11	CERAMIC CHIP	150PF	5%	50V	
C114	1-164-360-11	CERAMIC CHIP	0.1uF		16V	
C115	1-162-974-11	CERAMIC CHIP	0.01uF		50V	
C116	1-164-360-11	CERAMIC CHIP	0.1uF		16V	
C117	1-104-852-11	TANTAL. CHIP	22uF	20%	6.3V	
C118	1-104-852-11	TANTAL. CHIP	22uF	20%	6.3V	
C119	1-162-961-11	CERAMIC CHIP	330PF	10%	50V	
C120	1-162-974-11	CERAMIC CHIP	0.01uF		50V	
C121	1-135-259-11	TANTAL. CHIP	10uF	20%	6.3V	
C122	1-162-961-11	CERAMIC CHIP	330PF	10%	50V	
C123	1-162-974-11	CERAMIC CHIP	0.01uF		50V	

Ref.No.	Part No.	Description				Remark
R904	1-216-857-11	METAL CHIP	1M	5%	1/16W	
R906	1-216-841-11	METAL CHIP	47K	5%	1/16W	
R907	1-216-833-11	METAL CHIP	10K	5%	1/16W	
R908	1-216-821-11	METAL CHIP	1K	5%	1/16W	
R910	1-216-814-11	METAL CHIP	270	5%	1/16W	
R911	1-216-864-11	METAL CHIP	0	5%	1/16W	
R912	1-216-821-11	METAL CHIP	1K	5%	1/16W	
R913	1-220-397-11	METAL GLAZE	4.7M	5%	1/16W	
R914	1-216-832-11	METAL CHIP	8.2K	5%	1/16W	
R919	1-216-839-11	METAL CHIP	33K	5%	1/16W	
R920	1-216-839-11	METAL CHIP	33K	5%	1/16W	
R921	1-216-857-11	METAL CHIP	1M	5%	1/16W	
R922	1-216-839-11	METAL CHIP	33K	5%	1/16W	
R923	1-216-839-11	METAL CHIP	33K	5%	1/16W	
R924	1-216-864-11	METAL CHIP	0	5%	1/16W	
R925	1-216-830-11	METAL CHIP	5.6K	5%	1/16W	
R928	1-216-832-11	METAL CHIP	8.2K	5%	1/16W	
R930	1-216-833-11	METAL CHIP	10K	5%	1/16W	
R931	1-216-839-11	METAL CHIP	33K	5%	1/16W	
R933	1-216-864-11	METAL CHIP	0	5%	1/16W	
R934	1-216-821-11	METAL CHIP	1K	5%	1/16W	
R936	1-218-872-11	METAL CHIP	12K	0.50%	1/16W	
R937	1-218-905-11	METAL CHIP	270K	0.50%	1/16W	
R938	1-216-849-11	METAL CHIP	220K	5%	1/16W	
R939	1-216-837-11	METAL CHIP	22K	5%	1/16W	
R946	1-216-839-11	METAL CHIP	33K	5%	1/16W	
R947	1-216-807-11	METAL CHIP	68	5%	1/16W	
R948	1-216-807-11	METAL CHIP	68	5%	1/16W	
R949	1-216-807-11	METAL CHIP	68	5%	1/16W	
R953	1-216-840-11	METAL CHIP	39K	5%	1/16W	
R954	1-216-840-11	METAL CHIP	39K	5%	1/16W	
R959	1-216-844-11	METAL CHIP	82K	5%	1/16W	
R960	1-216-845-11	METAL CHIP	100K	5%	1/16W	
R961	1-216-850-11	METAL CHIP	270K	5%	1/16W	
R969	1-216-839-11	METAL CHIP	33K	5%	1/16W	
R970	1-216-839-11	METAL CHIP	33K	5%	1/16W	
R971	1-216-844-11	METAL CHIP	82K	5%	1/16W	
R973	1-216-839-11	METAL CHIP	33K	5%	1/16W	
R974	1-216-839-11	METAL CHIP	33K	5%	1/16W	

< VIBRATOR >

Ref.No.	Part No.	Description	Remark
X901	1-579-466-11	VIBRATOR, CRYSTAL (8.5MHz)	

****

Ref.No.	Part No.	Description	Remark
*	A-7063-868-A	VS-104 BOARD, COMPLETE (TR72) *************************	
*	A-7066-008-A	VS-104 BOARD, COMPLETE (TR80) *************************	
*	A-7066-079-A	VS-104 (H) BOARD, COMPLETE (TR400) *******************************	
*	A-7066-088-A	VS-104 BOARD, COMPLETE (TR430) *************************	
*	A-7066-134-A	VS-104 (H) BOARD, COMPLETE (TR750) *******************************	
*	A-7063-853-A	VS-112 BOARD, COMPLETE (TR82) *************************	
*	A-7096-019-A	VS-112 BOARD, COMPLETE (TR70) *************************	
*	A-7066-047-A	VS-112 (LL) BOARD, COMPLETE (TR42) *******************************	
*	A-7066-085-A	VS-112 BOARD, COMPLETE (TR550) *************************	

(Ref. No. 30,000 Series)

< CAPACITOR >

Ref.No.	Part No.	Description				Remark
C101	1-162-921-11	CERAMIC CHIP	33PF	5%	50V (TR42/TR70/TR72/TR80/TR82/TR430/TR550)	
C102	1-162-911-11	CERAMIC CHIP	6PF	0.5PF	50V (TR400/TR750)	
C102	1-162-922-11	CERAMIC CHIP	39PF	5%	50V (TR42/TR70/TR72/TR80/TR82/TR430/TR550)	
C103	1-162-974-11	CERAMIC CHIP	0.01uF		50V	
C104	1-162-974-11	CERAMIC CHIP	0.01uF		50V	
C106	1-164-004-11	CERAMIC CHIP	0.1uF	10%	25V	
C107	1-162-927-11	CERAMIC CHIP	100PF	5%	50V	
C108	1-162-928-11	CERAMIC CHIP	82PF	5%	50V	
C109	1-164-227-11	CERAMIC CHIP	0.022uF	10%	25V	
C110	1-164-227-11	CERAMIC CHIP	0.022uF	10%	25V	
C111	1-162-974-11	CERAMIC CHIP	0.01uF		50V	
C112	1-162-927-11	CERAMIC CHIP	100PF	5%	50V	
C113	1-162-929-11	CERAMIC CHIP	150PF	5%	50V	
C114	1-164-360-11	CERAMIC CHIP	0.1uF		16V	
C115	1-162-974-11	CERAMIC CHIP	0.01uF		50V	
C116	1-164-360-11	CERAMIC CHIP	0.1uF		16V	
C117	1-104-853-11	TANTAL. CHIP	22uF	20%	6.3V	
C118	1-104-853-11	TANTAL. CHIP	22uF	20%	6.3V	
C119	1-162-961-11	CERAMIC CHIP	330PF	10%	50V	
C120	1-162-974-11	CERAMIC CHIP	0.01uF		50V	
C121	1-135-259-11	TANTAL. CHIP	10uF	20%	6.3V	
C122	1-162-961-11	CERAMIC CHIP	330PF	10%	50V	
C123	1-162-974-11	CERAMIC CHIP	0.01uF		50V	

VS-104 VS-112

Ref. No.	Part No.	Description			Remark
C124	1-135-259-11	TANTAL. CHIP	10uF	20%	6.3V
C128	1-162-974-11	CERAMIC CHIP	0.01uF		50V
C131	1-162-974-11	CERAMIC CHIP	0.01uF		50V
C134	1-162-974-11	CERAMIC CHIP	0.01uF		50V
C136	1-162-974-11	CERAMIC CHIP	0.01uF		50V
C137	1-162-918-11	CERAMIC CHIP	18PF	5%	50V
C143	1-162-968-11	CERAMIC CHIP	0.0047uF	10%	50V
C144	1-164-227-11	CERAMIC CHIP	0.022uF	10%	25V
C145	1-104-852-11	TANTAL. CHIP	22uF	20%	6.3V
C146	1-164-360-11	CERAMIC CHIP	0.1uF		16V
C147	1-162-970-11	CERAMIC CHIP	0.01uF	10%	25V
C148	1-162-958-11	CERAMIC CHIP	270PF	5%	50V
C149	1-162-974-11	CERAMIC CHIP	0.01uF		50V
		(TR42/TR70/TR72/TR80/TR82/TR430/TR550)			
C150	1-162-974-11	CERAMIC CHIP	0.01uF		50V
		(TR42/TR70/TR72/TR80/TR82/TR430/TR550)			
C151	1-164-227-11	CERAMIC CHIP	0.022uF	10%	25V
		(TR42/TR70/TR72/TR80/TR82/TR430/TR550)			
C152	1-162-974-11	CERAMIC CHIP	0.01uF		50V
		(TR42/TR70/TR72/TR80/TR82/TR430/TR550)			
C153	1-162-970-11	CERAMIC CHIP	0.01uF	10%	25V
C154	1-162-945-11	CERAMIC CHIP	22PF	5%	50V
		(TR42/TR70/TR72/TR80/TR82/TR430/TR550)			
C155	1-162-974-11	CERAMIC CHIP	0.01uF		50V
					(TR400/TR750)
C157	1-162-918-11	CERAMIC CHIP	18PF	5%	50V
C158	1-164-227-11	CERAMIC CHIP	0.022uF	10%	25V
		(TR42/TR70/TR72/TR80/TR82/TR430/TR550)			
C159	1-162-922-11	CERAMIC CHIP	39PF	5%	50V
		(TR42/TR70/TR72/TR80/TR82/TR430/TR550)			
C160	1-162-946-11	CERAMIC CHIP	27PF	5%	50V
		(TR42/TR70/TR72/TR80/TR82/TR430/TR550)			
C161	1-162-966-11	CERAMIC CHIP	0.0022uF	10%	50V
C163	1-162-970-11	CERAMIC CHIP	0.01uF	10%	25V
		(TR42/TR70/TR72/TR80/TR82/TR430/TR550)			
C164	1-162-942-11	CERAMIC CHIP	12PF	5%	50V
		(TR42/TR70/TR72/TR80/TR82/TR430/TR550)			
C165	1-162-956-11	CERAMIC CHIP	180PF	5%	50V
		(TR42/TR70/TR72/TR80/TR82/TR430/TR550)			
C166	1-162-958-11	CERAMIC CHIP	270PF	5%	50V
C167	1-162-926-11	CERAMIC CHIP	82PF	5%	50V
		(TR72/TR80/TR400/TR430/TR750)			
C167	1-164-382-11	CERAMIC CHIP	91PF	5%	50V
					(TR42/TR70/TR82/TR550)
C168	1-164-227-11	CERAMIC CHIP	0.022uF	10%	25V
		(TR42/TR70/TR72/TR80/TR82/TR430/TR550)			
C169	1-162-949-11	CERAMIC CHIP	47PF	5%	50V
		(TR42/TR70/TR72/TR80/TR82/TR430/TR550)			
C170	1-162-915-11	CERAMIC CHIP	10PF	0.5PF	50V
					(TR400/TR750)
C171	1-162-927-11	CERAMIC CHIP	100PF	5%	50V
					(TR400/TR750)
C172	1-162-921-11	CERAMIC CHIP	33PF	5%	50V
		(TR42/TR70/TR72/TR80/TR82/TR430/TR550)			
C173	1-164-155-11	CERAMIC CHIP	75PF	5%	50V
					(TR400/TR750)
C175	1-162-915-11	CERAMIC CHIP	10PF	0.5PF	50V
					(TR400/TR750)
C176	1-162-921-11	CERAMIC CHIP	33PF	5%	50V
					(TR400/TR750)
C177	1-135-259-11	TANTAL. CHIP	10uF	20%	6.3V
C178	1-162-974-11	CERAMIC CHIP	0.01uF		50V
C179	1-162-974-11	CERAMIC CHIP	0.01uF		50V
C190	1-162-974-11	CERAMIC CHIP	0.01uF		50V
C202	1-162-944-11	CERAMIC CHIP	18PF	5%	50V
					(TR400/TR750)
C203	1-135-259-11	TANTAL. CHIP	10uF	20%	6.3V
C204	1-162-974-11	CERAMIC CHIP	0.01uF		50V
C205	1-162-974-11	CERAMIC CHIP	0.01uF		50V
		(TR42/TR72/TR82/TR430/TR550)			
C206	1-164-489-11	CERAMIC CHIP	0.22uF	10%	16V
C207	1-162-927-11	CERAMIC CHIP	100PF	5%	50V
C208	1-135-149-21	TANTALUM CHIP	2.2uF	20%	10V
C209	1-126-246-11	ELECT CHIP	220uF	20%	4V
C210	1-162-961-11	CERAMIC CHIP	330PF	10%	50V
C211	1-135-091-21	TANTAL. CHIP	1uF	20%	16V
C212	1-162-995-11	CERAMIC CHIP	0.022uF		50V
C213	1-135-176-21	TANTALUM CHIP	0.68uF	10%	20V
C214	1-164-005-11	CERAMIC CHIP	0.47uF		25V
C215	1-162-974-11	CERAMIC CHIP	0.01uF		50V
C216	1-135-259-11	TANTAL. CHIP	10uF	20%	6.3V
C217	1-135-091-21	TANTAL. CHIP	1uF	20%	16V
C218	1-164-005-11	CERAMIC CHIP	0.47uF		25V
C220	1-135-259-11	TANTAL. CHIP	10uF	20%	6.3V
C221	1-164-005-11	CERAMIC CHIP	0.47uF		25V
					(TR400/TR750)
C222	1-135-259-11	TANTAL. CHIP	10uF	20%	6.3V
C223	1-164-360-11	CERAMIC CHIP	0.1uF		16V
C225	1-162-970-11	CERAMIC CHIP	0.01uF	10%	25V
C226	1-162-926-11	CERAMIC CHIP	82PF	5%	50V
C227	1-135-259-11	TANTAL. CHIP	10uF	20%	6.3V
C228	1-162-974-11	CERAMIC CHIP	0.01uF		50V
C229	1-135-259-11	TANTAL. CHIP	10uF	20%	6.3V
C230	1-135-180-21	TANTALUM CHIP	3.3uF	20%	6.3V
C231	1-164-005-11	CERAMIC CHIP	0.47uF		25V
C234	1-162-957-11	CERAMIC CHIP	220PF	5%	50V
		(TR42/TR70/TR72/TR80/TR82/TR430/TR550)			
C234	1-164-471-11	CERAMIC CHIP	680PF	5%	50V
					(TR400/TR750)
C235	1-126-207-11	ELECT CHIP	33uF	20%	4V
C237	1-162-974-11	CERAMIC CHIP	0.01uF		50V
C238	1-135-259-11	TANTAL. CHIP	10uF	20%	6.3V
C239	1-162-974-11	CERAMIC CHIP	0.01uF		50V
C240	1-164-392-11	CERAMIC CHIP	390PF	5%	50V

Ref. No.	Part No.	Description				Remark
C124	1-135-250-11	TANTAL. CHIP	10uF	20%	6.3V	
C126	1-163-974-11	CERAMIC CHIP	0.01uF		50V	
C131	1-163-974-11	CERAMIC CHIP	0.01uF		50V	
C134	1-163-974-11	CERAMIC CHIP	0.01uF		50V	
C136	1-163-974-11	CERAMIC CHIP	0.01uF		50V	
C137	1-163-918-11	CERAMIC CHIP	18PF	5%	50V	
C143	1-163-968-11	CERAMIC CHIP	0.0047uF	10%	50V	
C144	1-164-827-11	CERAMIC CHIP	0.022uF	10%	25V	
C145	1-104-858-11	TANTAL. CHIP	22uF	20%	6.3V	
C146	1-164-889-11	CERAMIC CHIP	0.1uF		16V	
C147	1-163-975-11	CERAMIC CHIP	0.01uF	10%	25V	
C148	1-163-958-11	CERAMIC CHIP	270PF	5%	50V	
C149	1-163-974-11	CERAMIC CHIP	0.01uF		50V	
		(TR48/TR70/TR72/TR80/TR82/TR430/TR550)				
C150	1-163-974-11	CERAMIC CHIP	0.01uF		50V	
		(TR48/TR70/TR72/TR80/TR82/TR430/TR550)				
C151	1-164-827-11	CERAMIC CHIP	0.022uF	10%	25V	
		(TR48/TR70/TR72/TR80/TR82/TR430/TR550)				
C152	1-163-974-11	CERAMIC CHIP	0.01uF		50V	
		(TR48/TR70/TR72/TR80/TR82/TR430/TR550)				
C153	1-163-970-11	CERAMIC CHIP	0.01uF	10%	25V	
C154	1-163-945-11	CERAMIC CHIP	22PF	5%	50V	
		(TR48/TR70/TR72/TR80/TR82/TR430/TR550)				
C155	1-163-974-11	CERAMIC CHIP	0.01uF		50V	
					(TR400/TR750)	
C157	1-163-918-11	CERAMIC CHIP	18PF	5%	50V	
C158	1-164-827-11	CERAMIC CHIP	0.022uF	10%	25V	
		(TR48/TR70/TR72/TR80/TR82/TR430/TR550)				
C159	1-163-922-11	CERAMIC CHIP	39PF	5%	50V	
		(TR48/TR70/TR72/TR80/TR82/TR430/TR550)				
C160	1-163-946-11	CERAMIC CHIP	27PF	5%	50V	
		(TR48/TR70/TR72/TR80/TR82/TR430/TR550)				
C161	1-163-968-11	CERAMIC CHIP	0.0033uF	10%	50V	
C163	1-163-970-11	CERAMIC CHIP	0.01uF	10%	25V	
		(TR48/TR70/TR72/TR80/TR82/TR430/TR550)				
C164	1-163-943-11	CERAMIC CHIP	12PF	5%	50V	
		(TR48/TR70/TR72/TR80/TR82/TR430/TR550)				
C165	1-163-956-11	CERAMIC CHIP	180PF	5%	50V	
		(TR48/TR70/TR72/TR80/TR82/TR430/TR550)				
C166	1-163-958-11	CERAMIC CHIP	270PF	5%	50V	
C167	1-163-926-11	CERAMIC CHIP	68PF	5%	50V	
			(TR72/TR80/TR400/TR430/TR750)			
C167	1-164-862-11	CERAMIC CHIP	81PF	5%	50V	
			(TR48/TR70/TR82/TR550)			
C168	1-164-227-11	CERAMIC CHIP	0.022uF	10%	25V	
		(TR48/TR70/TR72/TR80/TR82/TR430/TR550)				
C169	1-163-949-11	CERAMIC CHIP	47PF	5%	50V	
		(TR48/TR70/TR72/TR80/TR82/TR430/TR550)				
C170	1-163-916-11	CERAMIC CHIP	10PF	0.5PF	50V	
					(TR400/TR750)	
C171	1-163-927-11	CERAMIC CHIP	100PF	5%	50V	
					(TR400/TR750)	

Ref. No.	Part No.	Description				Remark
C172	1-163-921-11	CERAMIC CHIP	56PF	5%	50V	
		(TR48/TR70/TR72/TR80/TR82/TR430/TR550)				
C173	1-164-165-11	CERAMIC CHIP	75PF	5%	50V	
					(TR400/TR750)	
C175	1-163-916-11	CERAMIC CHIP	10PF	0.5PF	50V	
					(TR400/TR750)	
C176	1-163-921-11	CERAMIC CHIP	33PF	5%	50V	
					(TR400/TR750)	
C177	1-135-259-11	TANTAL. CHIP	10uF	20%	6.3V	
C178	1-163-974-11	CERAMIC CHIP	0.01uF		50V	
C179	1-163-974-11	CERAMIC CHIP	0.01uF		50V	
C190	1-163-974-11	CERAMIC CHIP	0.01uF		50V	
C202	1-163-944-11	CERAMIC CHIP	18PF	5%	50V	
					(TR400/TR750)	
C203	1-135-259-11	TANTAL. CHIP	10uF	20%	6.3V	
C204	1-163-974-11	CERAMIC CHIP	0.01uF		50V	
C205	1-163-974-11	CERAMIC CHIP	0.01uF		50V	
		(TR48/TR72/TR82/TR430/TR550)				
C206	1-164-489-11	CERAMIC CHIP	0.33uF	10%	16V	
C207	1-163-927-11	CERAMIC CHIP	100PF	5%	50V	
C208	1-135-149-21	TANTALUM CHIP	2.2uF	20%	10V	
C209	1-139-248-11	ELECT CHIP	220uF	20%	4V	
C210	1-163-961-11	CERAMIC CHIP	330PF	10%	50V	
C211	1-135-081-21	TANTAL. CHIP	1uF	20%	16V	
C212	1-163-995-11	CERAMIC CHIP	0.022uF		50V	
C213	1-135-176-21	TANTALUM CHIP	0.68uF	10%	20V	
C214	1-164-005-11	CERAMIC CHIP	0.47uF		35V	
C215	1-163-974-11	CERAMIC CHIP	0.01uF		50V	
C216	1-135-259-11	TANTAL. CHIP	10uF	20%	6.3V	
C217	1-135-091-21	TANTAL. CHIP	1uF	20%	16V	
C218	1-164-005-11	CERAMIC CHIP	0.47uF		35V	
C220	1-135-259-11	TANTAL. CHIP	10uF	20%	6.3V	
C221	1-164-036-11	CERAMIC CHIP	0.47uF		35V	
					(TR400/TR750)	
C222	1-135-259-11	TANTAL. CHIP	10uF	20%	6.3V	
C223	1-164-860-11	CERAMIC CHIP	0.1uF		16V	
C225	1-163-970-11	CERAMIC CHIP	0.01uF	10%	25V	
C226	1-163-926-11	CERAMIC CHIP	68PF	5%	50V	
C227	1-135-259-11	TANTAL. CHIP	10uF	20%	6.3V	
C228	1-163-974-11	CERAMIC CHIP	0.01uF		50V	
C229	1-135-259-11	TANTAL. CHIP	10uF	20%	6.3V	
C230	1-135-180-21	TANTALUM CHIP	3.3uF	20%	6.3V	
C231	1-164-035-11	CERAMIC CHIP	0.47uF		35V	
C234	1-163-957-11	CERAMIC CHIP	220PF	5%	50V	
		(TR48/TR70/TR72/TR80/TR82/TR430/TR550)				
C234	1-164-471-11	CERAMIC CHIP	180PF	5%	50V	
					(TR400/TR750)	
C235	1-138-207-11	ELECT CHIP	33uF	20%	4V	
C237	1-163-974-11	CERAMIC CHIP	0.01uF		50V	
C238	1-135-259-11	TANTAL. CHIP	10uF	20%	6.3V	
C239	1-163-974-11	CERAMIC CHIP	0.01uF		50V	
C240	1-164-892-11	CERAMIC CHIP	390PF	5%	50V	

1-1-3. Precautions

1. Switch settings

Adjust the switches to the following positions, and adjust without loading the cassette tape, unless specified otherwise.

1. Camera/player power switch
   (Control switch block (Control switch block (CK board))
   ·····Camera
2. Standby switch (Control switch block (FK board)) ·· Standby
3. PROGRAM AE button (Control switch block (CK board))
   ·····Off
4. FOCUS switch (Control switch block (CK board)) ···Manual
5. BACK LIGHT button (Control switch block (CK board))
   ·····Off
6. STEADY SHOT button (CCD-TR82/TR400/TR550/TR750)
   (Control switch block (CK board))·····Off

2. Adjusting Procedure

Adjust in the given order.

3. Subject

1) Color bar chart (Standard picture frame)
   Adjust the picture frame as shown in Fig. 7-1-4. if adjustments are performed using the color bar chart. (Standard picture frame)
2) White pattern (Standard picture frame)
   Remove the color bar chart from the pattern box, and so that the white pattern will be displayed.
   Don't touch the zoom switch.

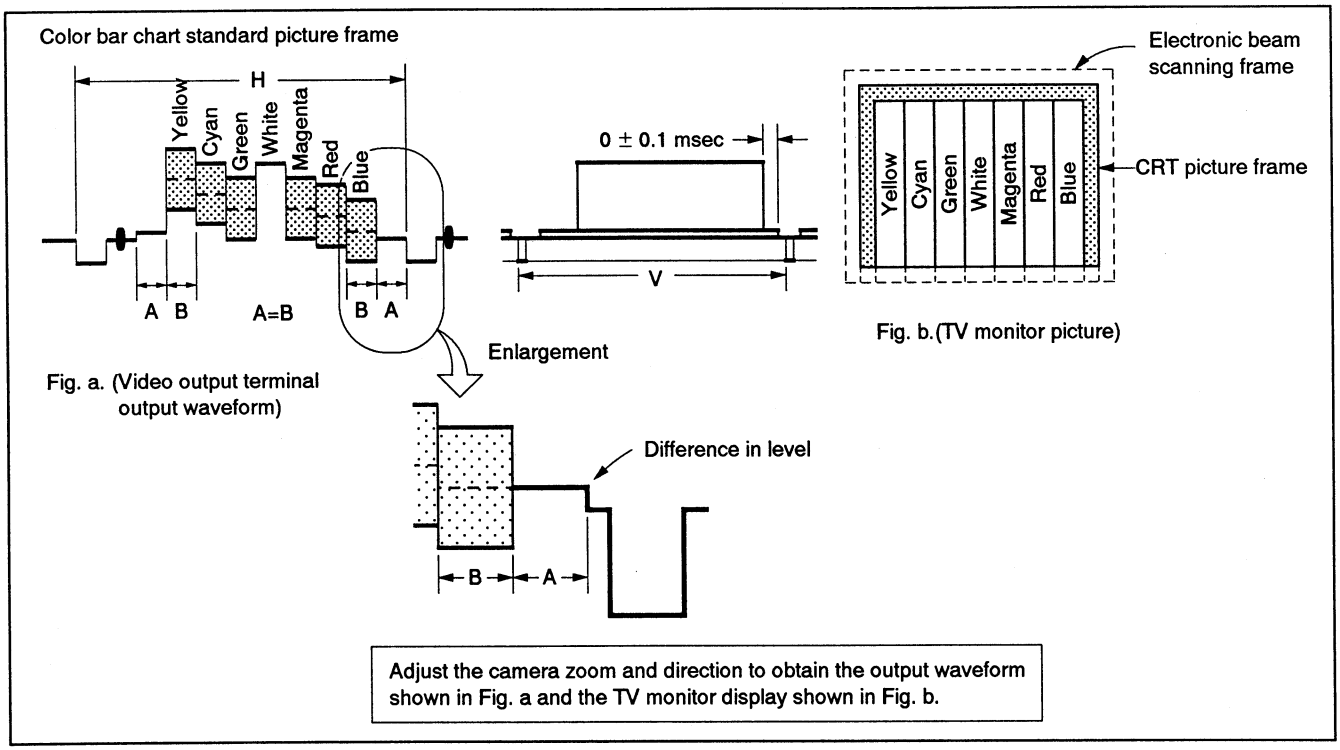

Fig. 7-1-4.

3) Chart for flange back adjustment
   Combine a white A0 size (1189 mm× 841 mm) paper to a black one, and make the chart shown in Fig. 7-1-5.

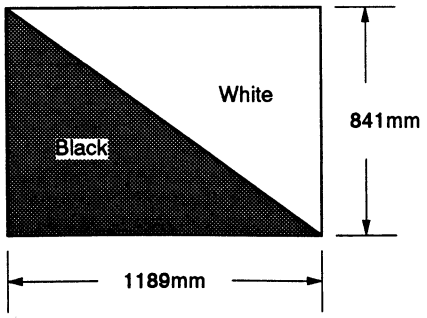

Fig. 7-1-5.

Note: Use the non-reflecting and non-glazing vellum paper whose size is more than A0, and make the boundary between white and black to be smoothly flat.

1-1-3. Precautions

1. Switch settings

Adjust the switches to the following positions, and adjust without loading the cassette tape, unless specified otherwise.

1. Camera/player power switch
   (Control switch block (Control switch block (CK board))
   .....Camera
2. Standby switch (Control switch block (FK board)) --Standby
3. PROGRAM AE button (Control switch block (CK board))
   .....Off
4. FOCUS switch (Control switch block (CK board)) ---Manual
5. BACK LIGHT button (Control switch block (CK board))
   .....Off
6. STEADY SHOT button (CCD-TR82/TR400/TR550/TR750)
   (Control switch block (CK board))-----Off

2. Adjusting Procedure

Adjust in the given order.

3. Subject

1) Color bar chart (Standard picture frame)
   Adjust the picture frame as shown in Fig. 7-1-4. if adjustments are performed using the color bar chart.
   (Standard picture frame)
2) White pattern (Standard picture frame)
   Remove the color bar chart from the pattern box, and so that the white pattern will be displayed.
   Don't touch the zoom switch.

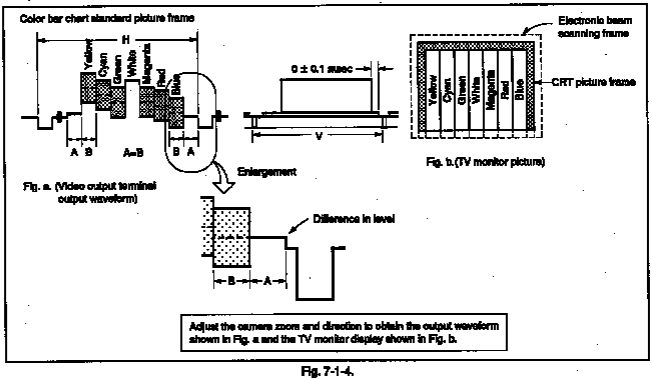

Fig. 7-1-4.

3) Chart for flange back adjustment
   Combine a white A0 size (1189 mm× 841 mm) paper to a black one, and make the chart shown in Fig. 7-1-5.

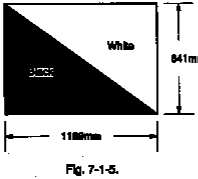

Fig. 7-1-5.

Note: Use the non-reflecting and non-glazing vellum paper whose size is more than A0, and make the boundary between white and black to be smoothly flat.

1-1-4. Adjusting Remote Commander

The camera section is adjusted by changing the constant or coefficient of the digital signal processing calculation, or modifying the output voltage of the EVR IC (VC board IC603). This is controlled by the camera micro processor (VC board IC602), which reads the data written in the nonvolatile memory (VC board IC601: EEPROM), and transmits it to the digital signal processing circuit and EVR.

To perform adjustments, adjustment data written in the nonvolatile memory must be rewritten, using the adjusting remote commander.

The adjusting remote commander uses the remote commander signal line (LANC) to communicate mutually with the camera microprocessor. The page, address and the up/down commands of the data are transmitted from the adjusting remote commander to the camera micro processor. And, the page, address, and data are transmitted for the vice versa.

1. Using the adjusting remote commander

1) Connect the adjusting remote commander to the remote terminal.
2) Adjust the HOLD switch of the adjusting remote commander to "HOLD" (SERVICE position).

If it has been properly connected, the LCD on the adjusting remote commander will display as shown in Fig. 7-1-6.

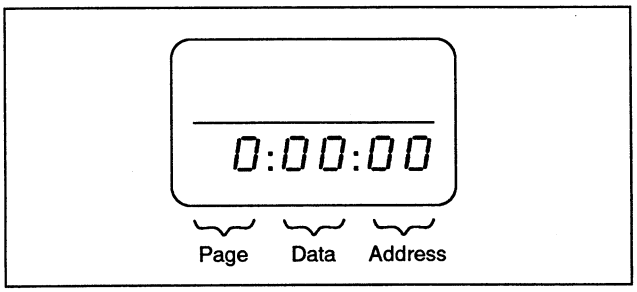

Fig. 7-1-6.

3) Operate the adjusting remote commander as follows.
   - Changing the page
     The page increases when the EDIT SEARCH+ button is pressed, and decreases when the EDIT SEARCH– button is pressed. There are altogether 16 pages, from 0 to F.

Hexadecimal notation	0	1	2	3	4	5	6	7	8	9	A	B	C	D	E	F
LCD Display	0	1	2	3	4	5	6	7	8	9	A	b	c	d	E	F
Decimal notation conversion value	0	1	2	3	4	5	6	7	8	9	10	11	12	13	14	15

Table 7-1-1.

   - Changing the address
     The address increases when the FF (▶▶) button is pressed, and decreases when the REW (◀◀) button is pressed. There are altogether 256 addresses, from 00 to FF.
   - Changing the data (Data setting)
     The data increases when the PLAY (▶) button is pressed, and decreases when the STOP (■) button is pressed.
     There are altogether 256 data, from 00 to FF.
   - Writing the adjustment data
     The PAUSE button must be pressed to write the adjustment data (F page) in the nonvolatile memory.
     (The new adjustment data will not be recorded in the nonvolatile memory if this step is not performed.)
4) Select page: 6, address: 00, and adjust the data to 01. Page F, and enables the camera section (Addresses 01 to BF of page F) to be adjusted.
5) After completing all adjustments, turn off the main power supply (6.3V) once.

2. Precautions upon using the adjusting remote commander

Mishandling of the adjusting remote commander may erase the correct adjustment data at times. To prevent this, it is recommended that all adjustment data be noted down before beginning adjustments and new adjustment data after each adjustment.

1-1-4. Adjusting Remote Commander

The camera section is adjusted by changing the constant or coefficient of the digital signal processing calculation, or modifying the output voltage of the EVR IC (VC board IC603). This is controlled by the camera micro processor (VC board IC602), which reads the data written in the nonvolatile memory (VC board IC601: EEPROM), and transmits it to the digital signal processing circuit and EVR.

To perform adjustments, adjustment data written in the nonvolatile memory must be rewritten, using the adjusting remote commander.

The adjusting remote commander uses the remote commander signal line (LANC) to communicate mutually with the camera microprocessor. The page, address and the up/down commands of the data are transmitted from the adjusting remote commander to the camera micro processor. And, the page, address, and data are transmitted for the vice versa.

1. Using the adjusting remote commander

1) Connect the adjusting remote commander to the remote terminal.
2) Adjust the HOLD switch of the adjusting remote commander to "HOLD" (SERVICE position).

If it has been properly connected, the LCD on the adjusting remote commander will display as shown in Fig. 7-1-6.

Fig. 7-1-6.

3) Operate the adjusting remote commander as follows.
   - Changing the page
     The page increases when the EDIT SEARCH+ button is pressed, and decreases when the EDIT SEARCH− button is pressed. There are altogether 16 pages, from 0 to F.

Hexadecimal notation	0	1	2	3	4	5	6	7	8	9	A	B	C	D	E	F
LCD Display	0	1	2	3	4	5	6	7	8	9	A	b	c	d	E	F
Decimal notation conversion value	0	1	2	3	4	5	6	7	8	9	10	11	12	13	14	15

Table 7-1-1.

   - Changing the address
     The address increases when the FF (▶▶) button is pressed, and decreases when the REW (◀◀) button is pressed. There are altogether 256 addresses, from 00 to FF.
   - Changing the data (Data setting)
     The data increases when the PLAY (▶) button is pressed, and decreases when the STOP (■) button is pressed.
     There are altogether 256 data, from 00 to FF.
   - Writing the adjustment data
     The PAUSE button must be pressed to write the adjustment data (F page) in the nonvolatile memory.
     (The new adjustment data will not be recorded in the nonvolatile memory if this step is not performed.)
4) Select page: 6, address: 00, and adjust the data to 01. Page F, and enables the camera section (Addresses 01 to BF of page F) to be adjusted.
5) After completing all adjustments, turn off the main power supply (6.3V) once.

2. Precautions upon using the adjusting remote commander

Mishandling of the adjusting remote commander may erase the correct adjustment data at times. To prevent this, it is recommended that all adjustment data be noted down before beginning adjustments and new adjustment data after each adjustment.

1-1-5. Page F Address List

Note 1: The data already listed in the adjustment data memo column are fixed values.

Note 2: The adjustment data initial values are values just after executing "Page F Data Initialization" and "Page F Data Modification". They are different from the values after executing all adjustments.

Note 3: In some cases, data have been input to the page F addresses C0 to FF. This has no relation to the adjustments.

Note 4: No mark : CCD-TR42/TR72/TR80/TR430
( ) : CCD-TR82/TR550
〈 〉 : CCD-TR70
《 》 : CCD-TR400/TR750

Address	Adjustment data	
	Initial value	Memo column
00	5C (5A) 〈5E〉 《56》	5C (5A) 〈5E〉 《56》
01	0A (00)	0A (00)
02	00	00
03	00 (07)	00 (07)
04	80	
05	80	
06	80	
07	80	
08	2D	
09	26	
0A	FA	
0B	F1	
0C	30	
0D	00	
0E	58	
0F	00	
10	E0	E0
11	8F	
12	6C	
13	36	
14	3C	
15	B6	
16	0D	
17	A3	
18	12	
19	8E	
1A	10	
1B	E2	
1C	0C	0C
1D	00	00
1E	80	
1F	80	
20	80 (79)	80 (79)
21	80 (79)	80 (79)
22	00	00
23	59	53
24	43	43
25	A5 (B5)	A5 (B5)
26	23	23
27	3A	3A
28	A2	A2
29	0B	0B

Table 7-1-2 (1).

1-1-5. Page F Address List

Note 1: The data already listed in the adjustment data memo column are fixed values.

Note 2: The adjustment data initial values are values just after executing "Page F Data Initialization" and "Page F Data Modification". They are different from the values after executing all adjustments.

Note 3: In some cases, data have been input to the page F addresses C0 to FF. This has no relation to the adjustments.

Note 4: No mark : CCD-TR42/TR72/TR80/TR430
( ) : CCD-TR82/TR550
〔 〕 : CCD-TR70
{ } : CCD-TR400/TR750

Address	Adjustment data	
	Initial value	Memo column
00	5C (5A) {5E} {56}	5C (5A) {5E} {56}
01	0A (00)	0A (00)
02	00	00
03	00 (07)	00 (07)
04	80	
05	80	
06	80	
07	80	
08	2D	
09	26	
0A	FA	
0B	F1	
0C	30	
0D	00	
0E	58	
0F	00	
10	B0	B0
11	8F	
12	6C	
13	36	
14	3C	
15	B6	
16	0D	
17	A3	
18	12	
19	8E	
1A	10	
1B	E2	
1C	0C	0C
1D	00	00
1E	80	
1F	80	
20	80 (79)	80 (79)
21	80 (79)	80 (79)
22	00	00
23	59	53
24	43	43
25	A5 (B5)	A5 (B5)
26	23	23
27	3A	3A
28	A2	A2
29	0B	0B

Table 7-1-2 (1).

Address	Adjustment data	
	Initial value	Memo column
2A	0C (2C)	0C (2C)
2B	58 (50)	58 (50)
2C	FF	FF
2D	06 ((04))	06 ((04))
2E	17 (16)	17 (16)
2F	22 (27) 《29》	22 (27) 《29》
30	08	08
31	00	00
32	50 (47) 《48》	50 (47) 《48》
33	68	68
34	00 (02)	00 (02)
35	30 (50)	30 (50)
36	02	02
37	00	00
38	76	76
39	6A	6A
3A	80	80
3B	20	20
3C	F0	F0
3D	03 (02)	03 (02)
3E	00	
3F	00	
40	00	
41	00	
42	00	
43	00	
44	00	
45	00	00
46	00	
47	00	
48	00	
49	00	
4A	00	
4B	00	
4C	00	
4D	00	
4E	00	00
4F	20	20
50	05 (32)	05 (32)
51	02	02
52	66	66
53	18	18

Table 7-1-2 (2).

Address	Adjustment data	
	Initial value	Memo column
54	66 (6B)	66 (6B)
55	9F	9F
56	66	66
57	66 (6C)	66 (6C)
58	59 (5C)	59 (5C)
59	83	83
5A	67	67
5B	5C	5C
5C	5C	5C
5D	4A	4A
5E	1E (20)	1E (20)
5F	5C	5C
60	3A (3C)	3A (3C)
61	33	33
62	0C	0C
63	26	26
64	04	04
65	02	02
66	00	00
67	00	00
68	00	00
69	00	00
6A	00	00
6B	00	00
6C	00	00
6D	00	00
6E	00	00
6F	34	34
70	10	10
71	26	26
72	0F	0F
73	0F	0F
74	00	00
75	23	23
76	1B	1B
77	E0	E0
78	A0	A0
79	30	30
7A	10	10
7B	50	50
7C	58	58
7D	88	88

Table 7-1-2 (3).

Address	Adjustment data	
	Initial value	Memo column
2A	0C (2C)	0C (2C)
2B	58 (50)	58 (50)
2C	FF	FF
2D	06 ((04))	06 ((04))
2E	17 (16)	17 (16)
2F	22 (27) {29}	22 (27) {29}
30	08	08
31	00	00
32	50 (47) {48}	50 (47) {48}
33	68	68
34	00 (02)	00 (02)
35	30 (50)	30 (50)
36	02	02
37	00	00
38	76	76
39	6A	6A
3A	80	80
3B	20	20
3C	F0	F0
3D	03 (02)	03 (02)
3E	00	
3F	00	
40	00	
41	00	
42	00	
43	00	
44	00	
45	00	00
46	00	
47	00	
48	00	
49	00	
4A	00	
4B	00	
4C	00	
4D	00	
4E	00	00
4F	20	20
50	05 (32)	05 (32)
51	02	02
52	66	66
53	18	18

Table 7-1-2 (2).

Address	Adjustment data	
	Initial value	Memo column
54	66 (6B)	66 (6B)
55	9F	9F
56	66	66
57	66 (6C)	66 (6C)
58	59 (5C)	59 (5C)
59	83	83
5A	67	67
5B	5C	5C
5C	5C	5C
5D	4A	4A
5E	1E (20)	1E (20)
5F	5C	5C
60	3A (3C)	3A (3C)
61	33	33
62	0C	0C
63	26	26
64	04	04
65	02	02
66	00	00
67	00	00
68	00	00
69	00	00
6A	00	00
6B	00	00
6C	00	00
6D	00	00
6E	00	00
6F	34	34
70	10	10
71	26	26
72	0F	0F
73	0F	0F
74	00	00
75	23	23
76	1B	1B
77	E0	E0
78	A0	A0
79	30	30
7A	10	10
7B	50	50
7C	58	58
7D	88	88

Table 7-1-2 (3).

Address	Adjustment data	
	Initial value	Memo column
7E	66	66
7F	46	46
80	8F	8F
81	13	13
82	30	30
83	60	60
84	70	70
85	80	80
86	A0	A0
87	C0	C0
88	70	70
89	78	78
8A	80	80
8B	90	90
8C	A0	A0
8D	40	40
8E	FF	FF
8F	00	00
90	00 〈11〉	00 〈11〉
91	77	77
92	00	00
93	FB	FB
94	02	02
95	32	32
96	6B	6B
97	8D	8D
98	A1	A1
99	30	30
9A	30	30
9B	21	21
9C	72	72
9D	00	00
9E	00	00
9F	00	00
A0	00	00
A1	00	00
A2	00	00
A3	02	02
A4	80	80
A5	00	00
A6	80	80
A7	00	00

Table 7-1-2 (4).

Address	Adjustment data	
	Initial value	Memo column
A8	00	00
A9	80	80
AA	00	00
AB	00	00
AC	02	02
AD	44	44
AE	3D	3D
AF	1B (25)	1B (25)
B0	3D	3D
B1	1B (25)	1B (25)
B2	A4 (A2)	A4 (A2)
B3	4B	4B
B4	00	00
B5	20	20
B6	00	00
B7	05	05
B8	00	00
B9	20	20
BA	00	00
BB	70 (6E)	70 (6E)
BC	35 (32)	35 (32)
BD	54	54
BE		
BF		
C0 to EF		
F0		
F1		
F2		
F3		
F4		
F5		
F6		
F7		
F8		
F9		
FA		
FB		
FC		
FD		
FE		
FF		

Table 7-1-2 (5).

Address	Adjustment data	
	Initial value	Memo column
7E	66	66
7F	46	46
80	8F	8F
81	13	13
82	30	30
83	60	60
84	70	70
85	80	80
86	A0	A0
87	C0	C0
88	70	70
89	78	78
8A	80	80
8B	90	90
8C	A0	A0
8D	40	40
8E	FF	FF
8F	00	00
90	00 (11)	00 (11)
91	77	77
92	00	00
93	FB	FB
94	02	02
95	32	32
96	6B	6B
97	8D	8D
98	A1	A1
99	30	30
9A	30	30
9B	21	21
9C	72	72
9D	00	00
9E	00	00
9F	00	00
A0	00	00
A1	00	00
A2	00	00
A3	02	02
A4	80	80
A5	00	00
A6	80	80
A7	00	00

Table 7-1-2 (4).

Address	Adjustment data	
	Initial value	Memo column
A8	00	00
A9	80	80
AA	00	00
AB	00	00
AC	02	02
AD	44	44
AE	3D	3D
AF	1B (25)	1B (25)
B0	3D	3D
B1	1B (25)	1B (25)
B2	A4 (A2)	A4 (A2)
B3	4B	4B
B4	00	00
B5	20	20
B6	00	00
B7	05	05
B8	00	00
B9	20	20
BA	00	00
BB	70 (6E)	70 (6E)
BC	35 (32)	35 (32)
BD	54	54
BE		
BF		
C0 to EF		
F0		
F1		
F2		
F3		
F4		
F5		
F6		
F7		
F8		
F9		
FA		
FB		
FC		
FD		
FE		
FF		

Table 7-1-2 (5).

1-1-6. Data Processing

The calculation of the DDS display and the adjusting remote commander display data (hexadecimal notation) are required for obtaining the adjustment data of some adjustment items. In this case, after converting the hexadecimal notation to decimal notation, calculate and convert the result to hexadecimal notation, and use it as the adjustment data. Table 7-1-3. indicates the hexadecimal notation-the decimal notation calculation table.

Hexadecimal notation-Decimal notation

②

The lower digits of the hexadecimal notation / The upper digits of the hexadecimal notation	0	1	2	3	4	5	6	7	8	9	A (A)	B (b)	C (c)	D (d)	E (E)	F (F)
0	0	1	2	3	4	5	6	7	8	9	10	11	12	13	14	15
1	16	17	18	19	20	21	22	23	24	25	26	27	28	29	30	31
2	32	33	34	35	36	37	38	39	40	41	42	43	44	45	46	47
3	48	49	50	51	52	53	54	55	56	57	58	59	60	61	62	63
4	64	65	66	67	68	69	70	71	72	73	74	75	76	77	78	79
5	80	80	82	83	84	85	86	87	88	89	90	91	92	93	94	95
6	96	97	98	99	100	101	102	103	104	105	106	107	108	109	110	111
7	112	113	114	115	116	117	118	119	120	121	122	123	124	125	126	127
8	128	129	130	131	132	133	134	135	136	137	138	139	140	141	142	143
9	144	145	146	147	148	149	150	151	152	153	154	155	156	157	158	159
A (A)	160	161	162	163	164	165	166	167	168	169	170	171	172	173	174	175
① → B (b)	176	177	178	179	180	180	182	183	184	185	186	187	188	189	190	191
C (c)	192	193	194	195	196	197	198	199	200	201	202	203	204	205	206	207
D (d)	208	209	210	211	212	213	214	215	216	217	218	219	220	221	222	223
E (E)	224	225	226	227	228	229	230	231	232	233	234	235	236	237	238	239
F (F)	240	241	242	243	244	245	246	247	248	249	250	251	252	253	254	255

Note: ( ) indicate the adjusting remote control unit display.

(Example) In the case that the DDS display and the adjusting remote control unit display are BD (b d).
As the upper digit of the hexadecimal notation is B (b), and the lower digit is D (d), the intersection "189" of the ① and ② in the above table is the decimal notation to be calculated.

Table 7-1-3.

1-1-6. Data Processing

The calculation of the DDS display and the adjusting remote commander display data (hexadecimal notation) are required for obtaining the adjustment data of some adjustment items. In this case, after converting the hexadecimal notation to decimal notation, calculate and convert the result to hexadecimal notation, and use it as the adjustment data. Table 7-1-3. indicates the hexadecimal notation-the decimal notation calculation table.

Hexadecimal notation-Decimal notation

②

The lower digits of the hexadecimal notation / The upper digits of the hexadecimal notation	0	1	2	3	4	5	6	7	8	9	A (A)	B (b)	C (c)	D (d)	E (E)	F (F)
0	0	1	2	3	4	5	6	7	8	9	10	11	12	13	14	15
1	16	17	18	19	20	21	22	23	24	25	26	27	28	29	30	31
2	32	33	34	35	36	37	38	39	40	41	42	43	44	45	46	47
3	48	49	50	51	52	53	54	55	56	57	58	59	60	61	62	63
4	64	65	66	67	68	69	70	71	72	73	74	75	76	77	78	79
5	80	80	82	83	84	85	86	87	88	89	90	91	92	93	94	95
6	96	97	98	99	100	101	102	103	104	105	106	107	108	109	110	111
7	112	113	114	115	116	117	118	119	120	121	122	123	124	125	126	127
8	128	129	130	131	132	133	134	135	136	137	138	139	140	141	142	143
9	144	145	146	147	148	149	150	151	152	153	154	155	156	157	158	159
A (A)	160	161	162	163	164	165	166	167	168	169	170	171	172	173	174	175
① → B (b)	176	177	178	179	180	180	182	183	184	185	186	187	188	189	190	191
C (c)	192	193	194	195	196	197	198	199	200	201	202	203	204	205	206	207
D (d)	208	209	210	211	212	213	214	215	216	217	218	219	220	221	222	223
E (E)	224	225	226	227	228	229	230	231	232	233	234	235	236	237	238	239
F (F)	240	241	242	243	244	245	246	247	248	249	250	251	252	253	254	255

Note: ( ) indicate the adjusting remote control unit display.

(Example) In the case that the DDS display and the adjusting remote control unit display are BD (b d).
As the upper digit of the hexadecimal notation is B (b), and the lower digit is D (d), the intersection "189" of the ① and ② in the above table is the decimal notation to be calculated.

Table 7-1-3.

Using the PROGRAM AE Function

You can select from four PROGRAM AE (Auto Exposure) modes to suit your shooting situation. When you use PROGRAM AE, you can get a Portrait effect (the subject is in focus and the background is out of focus), capture high-speed action or night views.

Selecting the Best Mode

Select the best mode by using the following examples.

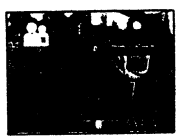


Portrait mode
- A still subject such as a person or flower
- Subject behind an obstacle such as a net
- Zooming in on a subject in telephoto

Sports mode
- Outdoor sports scenes such as football, tennis, golf or skiing
- A landscape in a moving car

High-speed shutter mode
- A golf swing or a tennis match in fine weather with the ball captured clearly
- Playing back certain scenes with high-speed movements in clear, sharp picture

Twilight mode
Recording night views neon signs or fireworks

Using the PROGRAM AE Function

Press PROGRAM AE repeatedly so that the desired mode indicator appears inside the viewfinder.

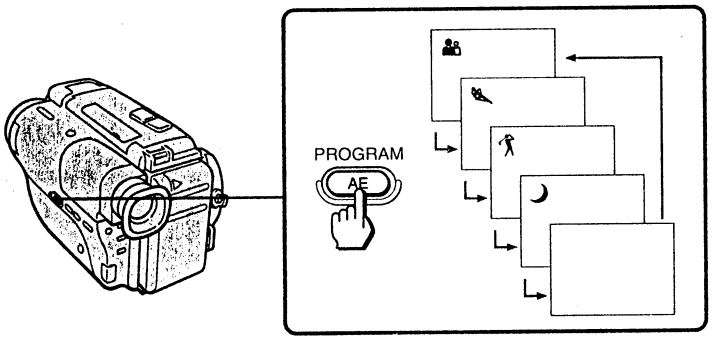

Note on shutter speed
The shutter speed in each PROGRAM AE mode is as follows:
Portrait mode – between 1/60 to 1/2000
Sports mode – between 1/60 to 1/500
High-speed shutter mode – 1/4000
Twilight mode – 1/60
Normal mode – 1/60

Fade-in and Fade-out

You can fade in or fade out to give your recording a professional appearance. When fading in, the picture will gradually appear from black or mosaic. The sound will also gradually increase. When fading out, the picture will gradually fade to black or mosaic. The sound will also decrease.

When Fading in [a]
(1) During the camcorder is in Standby mode, press FADER. The fade indicator starts flashing.
(2) Press START/STOP to start recording. The fade indicator stops flashing.

When Fading out [b]
(1) During recording, press FADER. The fade indicator starts flashing. **(2)** Press START/STOP to stop recording. The fade indicator stops flashing and recording stops.

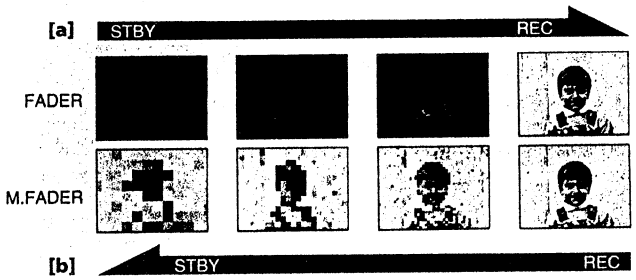

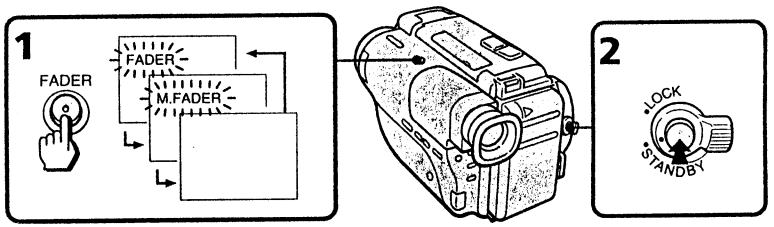

To Cancel the Fade-in/out Function
Before pressing START/STOP, press FADER once or twice until the fade indicator disappears.

When the date/time indicator is displayed
The date/time does not fade in nor fade out.

Using the PROGRAM AE Function

You can select from four PROGRAM AE (Auto Exposure) modes to suit your shooting situation. When you use PROGRAM AE, you can get a Portrait effect (the subject is in focus and the background is out of focus), capture high-speed action or night views.

Selecting the best mode

Select the best mode by using the following examples.

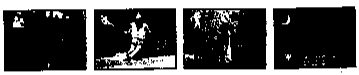

Portrait mode
- A still subject such as a person or flower
- Subject behind an obstacle such as a net
- Zooming in on a subject in telephoto

Sports mode
- Outdoor sports scenes such as football, tennis, golf or sailing
- A landscape in a moving car

High-speed shutter mode
- A golf swing or a tennis match in fine weather with the ball captured clearly
- Playing back certain scenes with high-speed movements in clear, sharp picture

Twilight mode
Recording night views such as neon signs or fireworks

Using the PROGRAM AE Function

Press PROGRAM AE repeatedly so that the desired mode indicator appears inside the viewfinder.

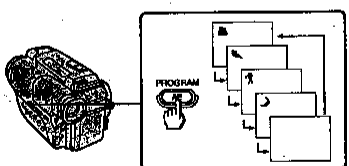

Note on shutter speed
The shutter speed in each PROGRAM AE mode is as follows:
Portrait mode – between 1/60 to 1/2000
Sports mode – between 1/60 to 1/500
High-speed shutter mode – 1/4000
Twilight mode – 1/60
Normal mode – 1/60

Fade-in and Fade-out

You can fade in or fade out to give your recording a professional appearance. When fading in, the picture will gradually appear from black or monochrome. The sound will also gradually increase. When fading out, the picture will gradually fade to black or monochrome. The sound will also decrease.

When Fading In [a]
(1) During the camcorder is in Standby mode, press FADER. The fade indicator starts flashing.
(2) Press START/STOP to start recording. The fade indicator stops flashing.

When Fading out [b]
(1) During recording, press FADER. The fade indicator starts flashing. (2) Press START/STOP to stop recording. The fade indicator stops flashing and recording stops.

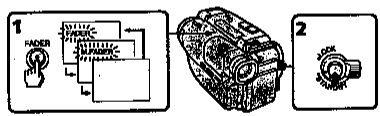

To Cancel the Fade-in/out Function
Before pressing START/STOP, press FADER once or twice until the fade indicator disappears.

When the date/time indicator is displayed
The date/time does not fade in nor fade out.

Releasing the Steady Shot Function

— For the model with the STEADY SHOT switch (CCD-TR82 only)

When you shoot, the indicator appears in the viewfinder. This indicates that the Steady Shot function is working and the camcorder compensates for camera-shake.

You can release the Steady Shot function. Do not use the Steady Shot function such as when shooting stationary object with a tripod.

Set STEADY SHOT to OFF.

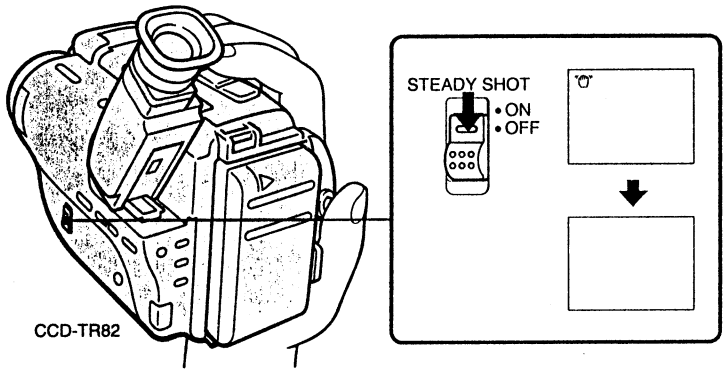

To Activate the Steady Shot Function Again

Set STEADY SHOT to ON.

Notes on the Steady Shot Function

- The Steady Shot function will not correct excessive camera-shake.
- When you switch the STEADY SHOT, the exposure may vary.

Changing the Mode Settings

You can change the mode settings in the menu system to further enjoy the features and functions. **(1)** Press MENU to display the menu in the viewfinder. **(2)** Press ↑ or ↓ to select the desired item, then press EXECUTE. **(3)** Press ↑ or ↓ to set the desired mode, then press EXECUTE. If you want to change the other modes, repeat steps 2 and 3. **(4)** Press MENU to erase the menu display.

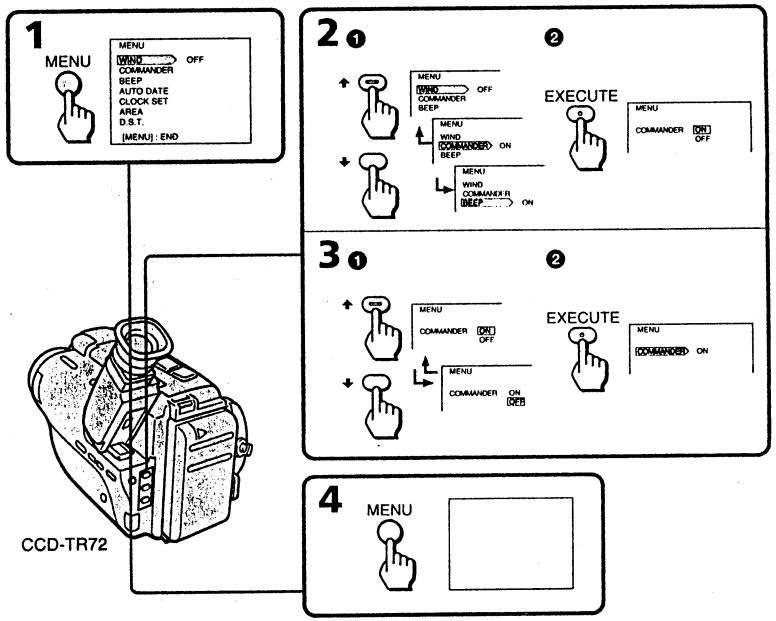

Note on BACK UP

When BACK UP indicator appears on the menu display, the settings of items are retained even when the battery is removed, as long as the lithium battery is in place.

Selecting the Mode Setting of Each Item

Common Items in CAMERA and PLAYER Modes

COMMANDER <ON/OFF>

- Select ON when using the supplied Remote Commander for the camcorder.
- Select OFF when not using the Remote Commander for the camcorder.

BEEP <ON/OFF>

- Select ON so that beeps sound when you start/stop recording.
- Select OFF when you do not want to hear the beep sound.

See the next page for further information.

Releasing the Steady Shot Function

— For the model with the STEADY SHOT switch (CCD-TR82 only)

When you shoot, the ☞ indicator appears in the viewfinder. This indicates that the Steady Shot function is working and the camcorder compensates for camera-shake.

You can release the Steady Shot function. Do not use the Steady Shot function such as when shooting stationary object with a tripod.

Set STEADY SHOT to OFF.

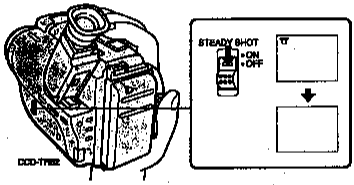

To Activate the Steady Shot Function Again
Set STEADY SHOT to ON.

Notes on the Steady Shot Function
- The Steady Shot function will not correct excessive camera-shake.
- When you switch the STEADY SHOT, the exposure may vary.

Changing the Mode Settings

You can change the mode settings in the menu system to further enjoy the features and functions.
(1) Press MENU to display the menu in the viewfinder. (2) Press ❖ or ❖ to select the desired item, then press EXECUTE. (3) Press ❖ or ❖ to set the desired mode, then press EXECUTE. If you want to change the other modes, repeat steps 2 and 3. (4) Press MENU to erase the menu display.

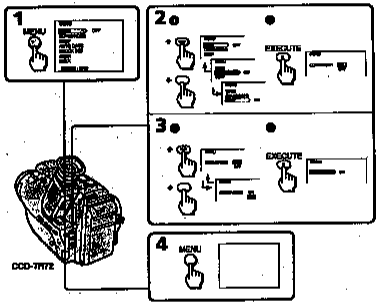

Note on BACK UP
When BACK UP indicator appears on the menu display, the settings of items are retained even when the battery is removed, as long as the lithium battery is in place.

Setting of Each Item

Common Items in CAMERA and PLAYER Modes
COMMANDER <ON/OFF>
- Select ON when using the supplied Remote Commander for the camcorder.
- Select OFF when not using the Remote Commander for the camcorder.

BEEP <ON/OFF>
- Select ON so that beeps sound when you start/stop recording.
- Select OFF when you do not want to hear the beep sound.

See the next page for further information.

Items in CAMERA mode

WIND <ON/OFF>
— For stereo models (CCD-TR72/TR80)
• Select ON to reduce wind noise when recording in strong wind.
• Normally select OFF.

AUTO DATE <ON/OFF>
• Select ON to record the date of recording automatically (AUTO DATE feature p.12).
• Select OFF otherwise.

CLOCK SET
Select this item when you need to reset the clock (p.31).

AREA
Select the area number of the time zone where you will use the camcorder when you use the world clock (p.27).

D.S.T. <ON/OFF>
• Select ON to set the clock to Daylight Saving Time.
• Select OFF to set to standard time.

Items in PLAYER mode

EDIT <ON/OFF>
• Select ON to minimize the picture deterioration when editing.
• Normally select OFF.

HiFi SOUND <STEREO/1/2>
—For stereo models (CCD-TR72/TR80)
• Normally select STEREO.
• Select 1 or 2 to play back a dual soundtrack tape.

Using the World Clock

Reset the clock according to the local time zone by setting AREA and D.S.T. modes in the menu system. First find the area number in the "Time zone chart" on page 28.
(1) Turn STANDBY up. **(2)** Press MENU to display the menu. **(3)** Select AREA item (p.26). Press ↑ or ↓ to select the area number where you will use the camcorder. Press EXECUTE. **(4)** Select D.S.T. item (p.26). Press ↑ or ↓ to select ON: for Daylight Saving Time or OFF: for standard time. Press EXECUTE.

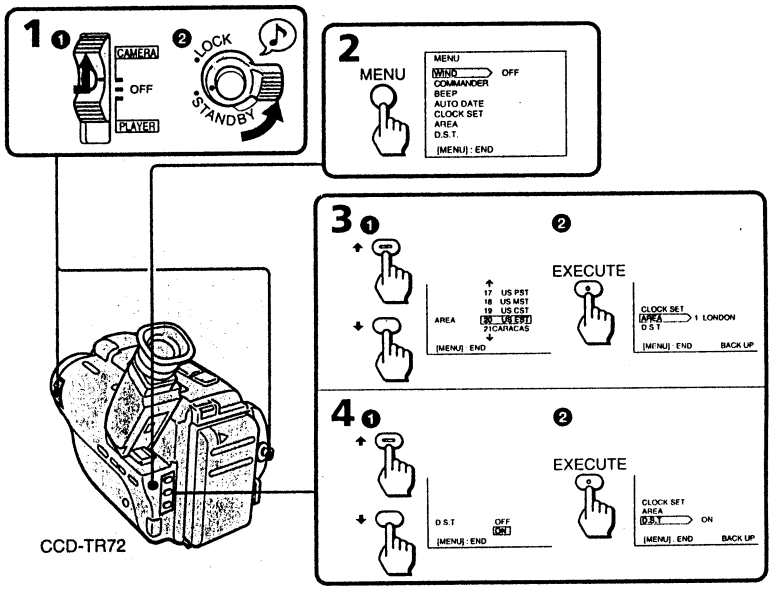

The area name appears in the viewfinder when using the world clock. The ☀ indicator appears in the viewfinder when setting to Daylight Saving Time.

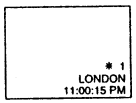

To Check the Date
Press DATE. To turn off the date indicator, press DATE again.

To restore to Your Home Area Time
Reset the AREA mode in the menu system to your home area number.

See the next page for the Time Zone Chart.

Items in CAMERA mode

WIND <ON/OFF>
— For stereo models (CCD-TR72/TR80)
- Select ON to reduce wind noise when recording in strong wind.
- Normally select OFF.

AUTO DATE <ON/OFF>
- Select ON to record the date of recording automatically (AUTO DATE feature p.12).
- Select OFF otherwise.

CLOCK SET
Select this item when you need to reset the clock (p.31).

AREA
Select the area number of the time zone where you will use the camcorder when you use the world clock (p.27).

D.S.T. <ON/OFF>
- Select ON to set the clock to Daylight Saving Time.
- Select OFF to set to standard time.

Items in PLAYER mode

EDIT <ON/OFF>
- Select ON to minimize the picture deterioration when editing.
- Normally select OFF.

HFI SOUND <STEREO/1/2>
— For stereo models (CCD-TR72/TR80)
- Normally select STEREO.
- Select 1 or 2 to play back a dual soundtrack tape.

Using the World Clock

Reset the clock according to the local time zone by setting AREA and D.S.T. modes in the menu system. First find the area number in the "Time zone chart" on page 28.
(1) Turn STANDBY up. (2) Press MENU to display the menu. (3) Select AREA item (p.26). Press + or + to select the area number where you will use the camcorder. Press EXECUTE. (4) Select D.S.T. item (p.26). Press + or + to select ON for Daylight Saving Time or OFF for standard time. Press EXECUTE.

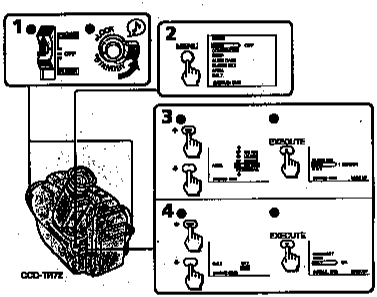

The area name appears in the viewfinder when using the world clock. The ☀ indicator appears in the viewfinder when setting to Daylight Saving Time.

To Check the Date

Press DATE. To turn off the date indicator, press DATE again.

To restore to Your Home Area Time

Reset the AREA mode in the menu system to your home area number.

See the next page for the Time Zone Chart.

Changing the Mode Settings

Time Zone Chart

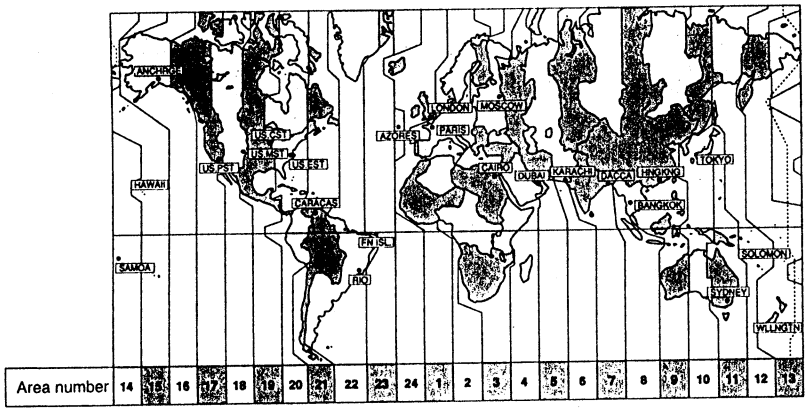

Area number	Area name	Nations or area*
1	LONDON	England, GMT (Greenwich Mean Time), Morocco, Portugal
2	PARIS	Austria, France, Germany, Italy, Netherlands, Spain, Sweden, Switzerland, CET
3	CAIRO	Egypt, Finland, Greece, Israel, Turkey
4	MOSCOW	Ethiopia, Iraq, Kenya, Saudi Arabia, former U.S.S.R. (west)
5	DUBAI	United Arab Emirates
6	KARACHI	Maldives, Pakistan
7	DACCA	Bangladesh, Myanmar
8	BANGKOK	Cambodia, Indonesia (Jakarta), Thailand, Vietnam
9	HNGKNG	Australia (west), China, Hong Kong, Indonesia (Bali, Borneo), Malaysia, Philippines, Singapore, Taiwan
10	TOKYO	Japan, Korea
11	SYDNEY	Australia (east), Guam, Saipan
12	SOLOMON	New Caledonia
13	WLLNGTN	Fiji, New Zealand
14	SAMOA	Western Samoa
15	HAWAII	HST (Hawaii Standard Time), Tahiti
16	ANCHRGE	AST (Alaska Standard Time)
17	US. PST	PST (Pacific Standard Time)
18	US. MST	MST (Mountain Standard Time)
19	US. CST	CST (Central Standard Time), Mexico
20	US. EST	EST (East Standard Time), Peru
21	CARACAS	Chili, Dominica, Venezuela
22	RIO	Argentina, Brazil, Uruguay
23	FN ISL.	Fernando de Noronha
24	AZORES	Azores Islands

* These are common names. They may be different from formal country names.

Editing onto Another Tape

You can create your own video program by editing with any other 8 mm, Hi8 Hi8, VHS VHS, S-VHS S-VHS, VHSC VHSC, S-VHSC S-VHSC, or Betamax VCR that has video/audio inputs.

Before Editing

After connecting the camcorder to the VCR,
(1) Slide the POWER switch to PLAYER. **(2)** Set EDIT mode to ON in the menu system to minimise the picture deterioration (p.25).

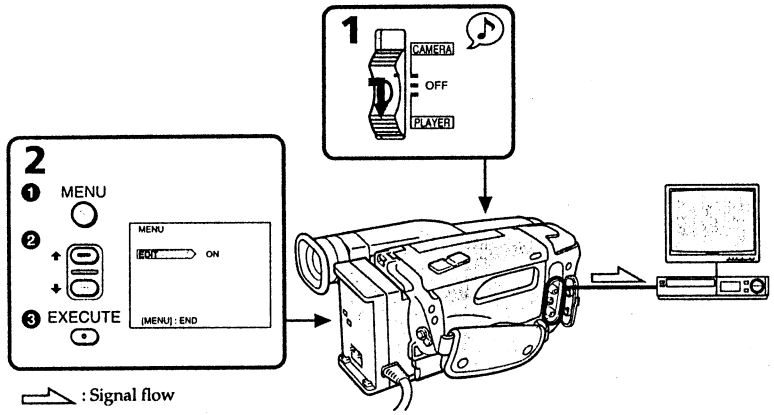

Starting Editing

(1) Insert a blank tape (or a tape you want to record over) into the recording VCR. Then insert your recorded tape into the camcorder. **(2)** Play back the recorded tape on the camcorder until you locate the point where you want to start editing. Then set the camcorder to playback pause mode. **(3)** Set the recording VCR to recording pause mode. **(4)** Press ❚❚ on the camcorder and VCR simultaneously to start editing.

To Edit More Scenes

Repeat steps 2 to 4.

To Stop Editing

Press □ STOP on the camcorder and VCR. When you finish editing, reset EDIT mode to OFF (p.25).

Use of the EDITSEARCH button

To play back a tape in the forward or reverse direction keep pressing EDITSEARCH during playback pause. You can play back still pictures successively at specific intervals by pressing EDITSEARCH intermittently.

Note on DISPLAY function

If you have displayed the viewfinder screen indicators on the TV (DISPLAY function), erase the indicators by pressing DISPLAY on the Remote Commander so that they will not be superimposed on the edited tape.

Time Zone Chart

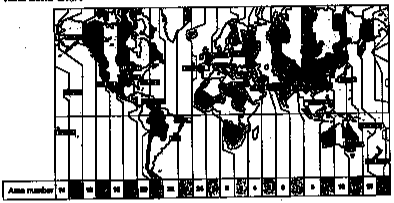

Area number	Area name	Nations or area*
1	LONDON	England, GMT (Greenwich Mean Time), Morocco, Portugal
2	PARIS	Austria, France, Germany, Italy, Netherlands, Spain, Sweden, Switzerland, CET
3	CAIRO	Egypt, Finland, Greece, Israel, Turkey
4	MOSCOW	Ethiopia, Iraq, Kenya, Saudi Arabia, former U.S.S.R. (west)
5	DUBAI	United Arab Emirates
6	KARACHI	Maldives, Pakistan
7	DACCA	Bangladesh, Myanmar
8	BANGKOK	Cambodia, Indonesia (Jakarta), Thailand, Vietnam
9	HONGKONG	Australia (west), China, Hong Kong, Indonesia (Bali, Borneo), Malaysia, Philippines, Singapore, Taiwan
10	TOKYO	Japan, Korea
11	SYDNEY	Australia (east), Guam, Saipan
12	SOLOMON	New Caledonia
13	WELLINGTN	Fiji, New Zealand
14	SAMOA	Western Samoa
15	HAWAII	HST (Hawaii Standard Time), Tahiti
16	ANCHRAGE	AST (Alaska Standard Time)
17	US, PST	PST (Pacific Standard Time)
18	US, MST	MST (Mountain Standard Time)
19	US, CST	CST (Central Standard Time), Mexico
20	US, EST	EST (East Standard Time), Peru
21	CARACAS	Chile, Bolivia, Venezuela
22	RIO	Argentina, Brazil, Uruguay
23	FN BL.	Fernando de Noronha
24	AZORES	Azores Islands

* These are common names. They may be different from formal country names.

Editing onto Another Tape

You can create your own video program by editing with any other 8 mm, Hi8 TM, Hi8 VM, Hi8 S-VM, Hi8 V-HS, Hi8 V-HSC, Hi8 S-VHSC, or 8 format VCR that has video/audio inputs.

Before Editing

After connecting the camcorder to the VCR,
(1) Slide the POWER switch to PLAYER. (2) Set EDIT mode to ON in the menu system to minimize the picture deterioration (p.33).

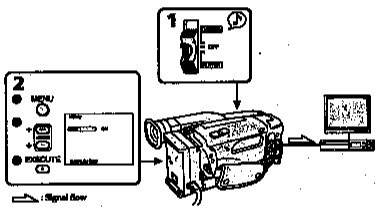

Starting Editing

(1) Insert a blank tape (or a tape you want to record over) into the recording VCR. Then insert your recorded tape into the camcorder. (2) Play back the recorded tape on the camcorder until you locate the point where you want to start editing. Then set the camcorder to playback pause mode. (3) Set the recording VCR to recording pause mode. (4) Press II on the camcorder and VCR simultaneously to start editing.

To Edit More Scenes

Repeat steps 2 to 4.

To Stop Editing

Press □ STOP on the camcorder and VCR. When you finish editing, reset EDIT mode to OFF (p.20).

Use of the REVSEARCH button

To play back a tape in the forward or reverse direction loop pressing REVSEARCH during playback pause. You can play back still pictures successively at specific intervals by pressing REVSEARCH intermittently.

Note on DISPLAY function

If you have displayed the viewfinder screen indications on the TV (DISPLAY function), erase the indicators by pressing DISPLAY on the Remote Commander so that they will not be superimposed on the edited tape.

Additional Information

Changing the Lithium Battery In the Camcorder

Your camcorder is supplied with the lithium battery installed. The lithium battery lasts for about 1 year under normal operation. When the battery becomes weak or dead, indicator flashes in the viewfinder for about 5 seconds when you set the POWER switch to CAMERA. In this case, **replace the battery with the Sony CR2025 or Duracell DL-2025 lithium battery. Use of another battery may present a risk of fire or explosion.**

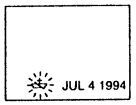

Note on Lithium Battery

Note that the lithium battery has a positive (+) and a negative (–) terminals as illustrated. **Be sure to install the lithium battery so that terminals on the battery match the terminals on the camcorder.**

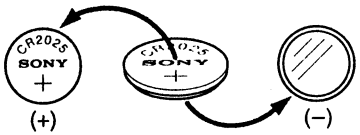

WARNING

The battery may explode if mistreated. Do not recharge, disassemble, or dispose of in fire.

Caution

Keep the lithium battery out of the reach of children. Should the battery be swallowed, consult a doctor immediately.

Changing the Lithium Battery

When replacing the lithium battery, keep the battery pack or other power source attached. Otherwise, you will need to reset the date, time and the other items with BACK UP indicator in the menu system. **(1)** Open the lid of the lithium battery compartment. **(2)** Push the battery down once and pull it out from the holder. **(3)** Install the lithium battery with the positive (+) side facing out. Close the lid of the battery compartment.

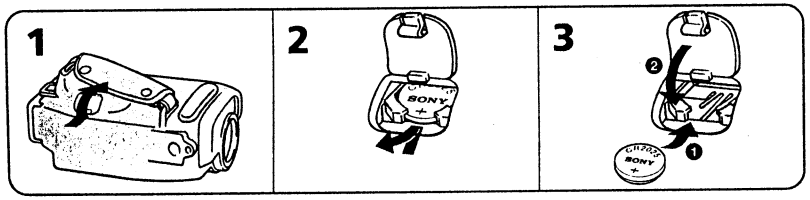

Resetting the Date and Time

Reset the date and time in the menu system.
(1) Press MENU to display the menu. **(2)** Press ↑ or ↓ to select CLOCK SET item (p.26). Press EXECUTE. **(3)** Press ↑ or ↓ to select the area number where you will use the camcorder. Press EXECUTE. **(4)** Select D.S.T. ON for Daylight Saving Time or OFF for standard time. Press EXECUTE. **(5)** Set year, month, day, time, minute by pressing ↑, ↓ and EXECUTE. Note that when you keep ↑ and ↓ pressed, the digits advance faster. **(6)** Press MENU to erase the menu display.

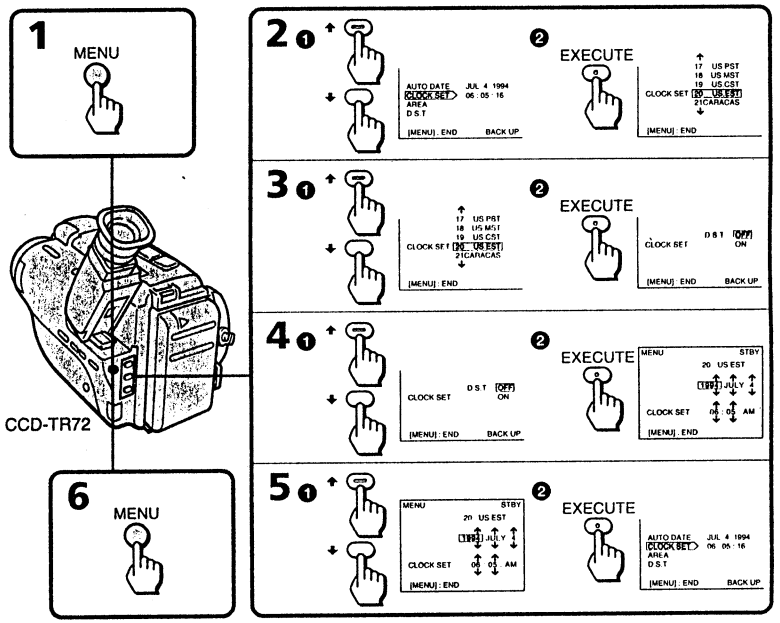

Time Zones and Area Numbers and Names

"S.T". in the following table stands for Standard Time.

Time Zones	Area Name	Area Number
Hawaii S.T.	HAWAI	15
Alaska S.T.	ANCHRGE	16
Pacific S.T./West Canada	US.PST	17
Mountain S.T.	US.MST	18
Central S.T.	US.CST	19
Eastern S.T./East Canada	US.EST	20

Additional Information

Changing the Lithium Battery in the Camcorder

Your camcorder is supplied with the lithium battery installed. The lithium battery lasts for about 1 year under normal operation. When the battery becomes weak or dead, its indicator flashes in the viewfinder for about 5 seconds when you set the POWER switch to CAMERA. In this case, replace the battery with the Sony CR2025 or Duracell DL-2025 lithium battery. Use of another battery may present a risk of fire or explosion.

Note on Lithium Battery

Note that the lithium battery has a positive (+) and a negative (–) terminals as illustrated. Be sure to install the lithium battery so that terminals on the battery match the terminals on the camcorder.

WARNING

The battery may explode if mistreated. Do not recharge, disassemble, or dispose of in fire.

Caution

Keep the lithium battery out of the reach of children. Should the battery be swallowed, consult a doctor immediately.

Preparing the Lithium Battery

When replacing the lithium battery, keep the battery pack or other power source attached. Otherwise, you will need to reset the date, time and the other items with BACK UP indicator in the menu system.
(1) Open the lid of the lithium battery compartment. (2) Push the battery down once and pull it out from the holder. (3) Install the lithium battery with the positive (+) side facing out. Close the lid of the battery compartment.

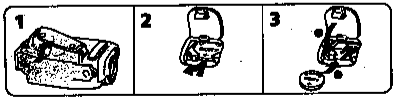

Resetting the Date and Time

Reset the date and time in the menu system.
(1) Press MENU to display the menu. (2) Press ❖ or ❖ to select CLOCK SET item (p.26). Press EXECUTE. (3) Press ❖ or ❖ to select the area number where you will use the camcorder. Press EXECUTE. (4) Select DST: ON for Daylight Saving Time or OFF for standard time. Press EXECUTE. (5) Set year, month, day, time, minute by pressing ❖, ❖ and EXECUTE. Note that when you keep ❖ and ❖ pressed, the digits advance faster. (6) Press MENU to erase the menu display.

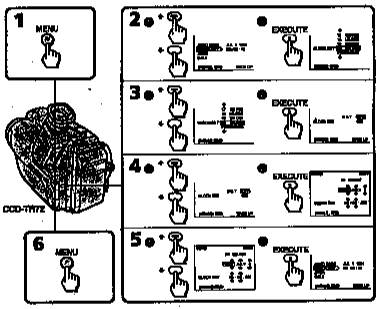

Time Zones and Area Numbers and Names
"S.T". in the following table stands for Standard Time.

Time Zones	Area Name	Area Number
Hawaii S.T.	HAWAI	15
Alaska S.T.	ANCHRGE	16
Pacific S.T./West Canada	USPST	17
Mountain S.T.	USMST	18
Central S.T.	USCST	19
Eastern S.T./East Canada	USEST	20

Resetting the Date and Time

To Correct the Date and Time Setting
Repeat steps 2 to 5.

To Check the Date and Time
Press DATE to display the date indicator in the viewfinder. Press TIME to display the time indicator. When you press the same button again, the indicator goes out.

To Reset to Standard Time
Change D.S.T. mode setting in the menu system (p.25).

The year indicator changes as follows:
1994 ↔ 1995 ←----→ 2024

Note on the time indicator
The internal clock of the camcorder operates on a 12-hour cycle. 12:00:00 AM stands for midnight. 12:00:00 PM stands for noon.

Playback Modes

The playback mode is selected automatically according to the recording system (SP/LP mode) in which the tape was recorded.

Notes on AFM Hi-Fi stereo — For stereo models (CCD-TR72/TR80)
When you play back the tape, the sound is in monaural if:
- You record the tape using this camcorder, then play it back on an AFM Hi-Fi monaural video recorder/player.
- You record the tape on an AFM Hi-Fi monaural video recorder, then play it back on this camcorder.

LP (long play) mode
When you play back a tape recorded in LP mode, the LP indicator lights up in the viewfinder. This camcorder cannot record tape in LP mode.

Foreign 8 mm video
You cannot play software recorded on a different TV color system. Because the TV color systems differ from country to country, you may not be able to play back foreign pre-recorded software. Refer to page 39 to check the TV color system of foreign countries.

Tips for Using the Battery Pack

This section shows you how you can get the most out of your battery pack.

Preparing the Battery Pack

Always Carry Additional Batteries
Have sufficient battery pack power to do 2 to 3 times as much recording as you have planned.

Battery Life is Shorter in Cold Environment
Battery efficiency is decreased and the battery will be used up more quickly if you are recording in cold environment.

To Save Battery Power
Turn the STANDBY switch on the camcorder down when not recording to save battery power. **[a]**
A smooth transition between scenes can be made even if recording is stopped and started again. While positioning the subject, selecting an angle, or looking through the viewfinder lens, the lens moves automatically and the battery is used. The battery is also used when a tape is inserted or removed.

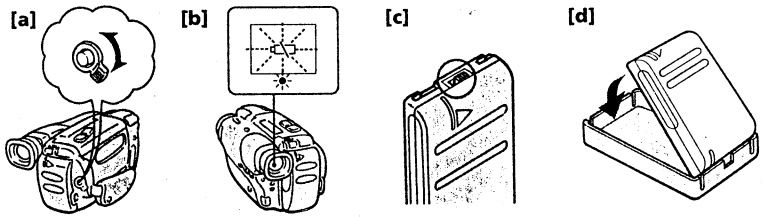

Resetting the Date and Time

To Correct the Date and Time Setting
Repeat steps 2 to 5.

To Check the Date and Time
Press DATE to display the date indicator in the viewfinder. Press TIME to display the time indicator. When you press the same button again, the indicator goes out.

To Reset to Standard Time
Change D.S.T. mode setting in the menu system (p.25).

The year indicator changes as follows:
1994 → 1995 → 2024

Note on the time indicator
The internal clock of the camcorder operates on a 12-hour cycle.
12:00:00 AM stands for midnight. 12:00:00 PM stands for noon.

Playback Modes

The playback mode is selected automatically according to the recording system (SP/LP mode) in which the tape was recorded.

Notes on AFM Hi-Fi stereo — For stereo models (CCD-TR72/TR80)
When you play back the tape, the sound is in monaural if:
- You record the tape using this camcorder, then play it back on an AFM Hi-Fi monaural video recorder/player.
- You record the tape on an AFM Hi-Fi monaural video recorder, then play it back on this camcorder.

LP (long play) mode
When you play back a tape recorded in LP mode, the LP indicator lights up in the viewfinder. This camcorder cannot record tape in LP mode.

Foreign & rare video
You cannot play software recorded on a different TV color system. Because the TV color systems differ from country to country, you may not be able to play back foreign pre-recorded software. Refer to page 59 to check the TV color system of foreign countries.

Tips for Using the Battery Pack

This section shows you how you can get the most out of your battery pack.

Preparing the Battery Pack

Always Carry Additional Batteries
Have sufficient battery pack power in do 2 in 3 times as much recording as you have planned.

Battery Life is Shorter in Cold Environment
Battery efficiency is decreased and the battery will be used up more quickly if you are recording in cold environment.

To Save Battery Power
Turn the STANDBY switch on the camcorder down when not recording to save battery power. [a]
A smooth transition between scenes can be made even if recording is stopped and started again. While positioning the subject, selecting an angle, or looking through the viewfinder lens, the lens moves automatically and the battery is used. The battery is also used when a tape is inserted or removed.

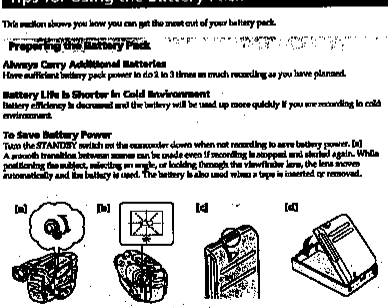

Tips for Using the Battery Pack

When to Replace the Battery Pack

While you are using your camcorder, the remaining battery indicator decreases gradually as battery power is used up.

When the remaining battery indicator reaches the lowest point, the i indicator appears and starts flashing in the viewfinder. **[b]** on page 33.
When the indicator in the viewfinder changes from slow flashing to rapid flashing while you are recording, slide the POWER switch to OFF on the camcorder and replace the battery pack. Leave the tape in the camcorder to obtain smooth transition between scenes after the battery pack is replaced.

Note on the remaining battery indicator

The remaining battery indicator of the camcorder may indicate a different remaining capacity from that of the battery pack with the remaining battery indicator (not supplied). The indicator of the battery pack is more accurate.

Notes on the Rechargeable Battery Pack

The Battery Heats Up

During charging or recording, the battery pack heats up. This is caused by energy that has been generated and a chemical change that has occurred inside the battery pack. This is not cause for concern.

Battery Care

- Remove the battery pack from the camcorder after using the battery pack, and keep it in a cool place. When the battery pack is attached to the camcorder, a small amount of current flows to the camcorder even if the POWER switch is set to OFF, which shortens battery life.
- The battery pack is always discharging even when it is not in use after charging. Therefore, you should charge the battery right before using the camcorder.

How to Use the Switch on the Battery Pack

This switch is provided so that you can mark the charged battery. Set the switch to the "no mark" position when charging is completed. Set the switch to the "red mark" position when the battery is used up (or in whichever direction you want to remind yourself). **[c]** on page 33.

The Life of the Battery Pack

The battery pack can be fully charged and discharged about 500 times under normal temperatures. If the indicator flashes rapidly just after turning on the camcordrer with a fully charged battery pack, the battery pack should be replaced with a new fully charged one.

Charging Temperature

You should charge batteries at temperatures from 50°F to 86°F (from 10°C to 30°C). Lower temperatures require a longer charging time.

Notes on Charging

A Brand-new Battery

A brand-new battery pack is not charged. Before using the battery pack, charge it completely.

Before Recharging a Used Battery Pack

- Make sure to use up the battery before recharging.
- If recording is completed before the indicator appears in the viewfinder, you should remove the tape, slide the POWER switch to CAMERA, turn STANDBY up, and leave the camcorder until the battery indicator flashes rapidly.
- When you use the AC-S10 power adaptor, you can use the discharging function.
- **Charging the usable battery causes a lowering of battery capacity. Battery capacity can be recovered if you fully discharge and charge the battery again.**

After Long Storage

Recharge the battery pack after a long period of storage. If the battery pack is charged fully but not used for a long time (about 1 year), it becomes discharged. Charge it again, but in this case the battery life will be shorter than normal. After several charging and discharging cycles, the battery life will recover its original capacity.

Notes on the Terminals

If the terminals (metal parts on the back) are not clean, the battery duration will be shortened.
When the terminals are not clean or when the battery pack has not been used for a long time, repeat installing and removing the battery pack. This improves the contact condition. Also, wipe the + and – terminals with a soft cloth or paper.

Be Sure to Observe the Following

- **To prevent an accident caused by a short circuit, do not allow metal objects such as a necklace to touch the battery terminals. Carry the battery pack attaching to the terminal cover. [d] on page 33.**
- Keep the battery pack away from fire.
- Keep the battery pack dry.
- Do not open nor convert the battery pack.
- Do not expose the battery pack to any mechanical shock.

When to Replace the Battery Pack

While you are using your camcorder, the remaining battery indicator decreases gradually as battery power is used up.

When the remaining battery indicator reaches the lowest point, the indicator appears and starts flashing in the viewfinder. (☞ on page 33.
When the ☞ indicator in the viewfinder changes from slow flashing to rapid flashing while you are recording, slide the POWER switch to OFF on the camcorder and replace the battery pack. Leave the tape in the camcorder to obtain smooth transition between scenes after the battery pack is replaced.

Note on the remaining battery indicator
The remaining battery indicator of the camcorder may indicate a different remaining capacity from that of the battery pack with the remaining battery indicator (not supplied). The indicator of the battery pack is more accurate.

Tips for Using the Rechargeable Battery Pack

The Battery Heats Up

During charging or recording, the battery pack heats up. This is caused by energy that has been generated and a chemical change that has occurred inside the battery pack. This is not cause for concern.

Battery Care

- Remove the battery pack from the camcorder after using the battery pack, and keep it in a cool place. When the battery pack is attached to the camcorder, a small amount of current flows to the camcorder even if the POWER switch is set to OFF, which shortens battery life.
- The battery pack is always discharging even when it is not in use after charging. Therefore, you should charge the battery right before using the camcorder.

How to Use the Switch on the Battery Pack

This switch is provided so that you can mark the charged battery. Set the switch to the "no mark" position when charging is completed. Set the switch to the "red mark" position when the battery is used up (or in whichever direction you want to mark your tape). (☞ on page 33.

The Life of the Battery Pack

The battery pack can be fully charged and discharged about 500 times under normal temperatures. If the ☞ indicator flashes rapidly just after turning on the camcorder with a fully charged battery pack, the battery pack should be replaced with a new fully charged one.

Charging Temperature

You should charge batteries at temperatures from 50°F to 86°F (from 10°C to 30°C). Lower temperatures require a longer charging time.

Tips for Using the Battery Pack

A Brand-new Battery

A brand-new battery pack is not charged. Before using the battery pack, charge it completely.

Before Recharging a Used Battery Pack

- Make sure to use up the battery before recharging.
- If recording is completed before the ☞ indicator appears in the viewfinder, you should remove the tape, slide the POWER switch to CAMERA, turn STANDBY up, and leave the camcorder until the battery indicator flashes rapidly.
- When you use the AC-610 power adapter, you can use the discharging function.
- Charging the stable battery causes a lowering of battery capacity. Battery capacity can be recovered if you fully discharge and charge the battery again.

After Long Storage

Recharge the battery pack after a long period of storage. If the battery pack is charged fully but not used for a long time (about 1 year), it becomes discharged. Charge it again, but in this case the battery life will be shorter than normal. After several charging and discharging cycles, the battery life will recover its original capacity.

Notes on the Terminal Parts

If the terminals (metal parts on the back) are not clean, the battery duration will be shortened. When the terminals are not clean or when the battery pack has not been used for a long time, repeat installing and removing the battery pack. This improves the contact condition. Also, wipe the + and – terminals with a soft cloth or paper.

Be Sure to Observe the Following

- To prevent an accident caused by a short circuit, do not allow metal objects such as a necklace to touch the battery terminals. Carry the battery pack attaching to the terminal cover. (☞ on page 33.
- Keep the battery pack away from fire.
- Keep the battery pack dry.
- Do not open nor convert the battery pack.
- Do not expose the battery pack to any mechanical shock.

Maintenance Information and Precautions

Moisture Condensation

If the camcorder is brought directly from a cold place to a warm place, moisture may condense inside the camcorder, on the surface of the tape, or on the lens. If this happens, the tape may stick to the head drum and be damaged or the camcorder may not operate correctly. To prevent possible damage under these circumstances, the camcorder is furnished with moisture sensors. However, take the following precautions.

Inside the Camcorder

When ⊡ and ⏏ indicators flash in the viewfinder, moisture has condensed inside the camcorder. If this happens, none of the functions except cassette ejection will work.
Eject the cassette turn off the camcorder, and leave it with the cassette compartment open for about 1 hour.
If the ⊡ indicator does not light up when you turn on the power, you can use the camcorder again.

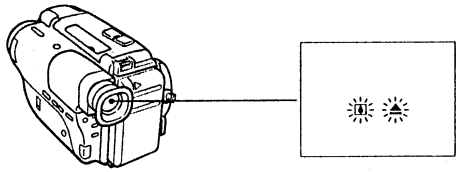

On the Surface of the Tape

If there is moisture on the surface of the tape, when you insert cassette and press a tape transport button (▶ PLAY, etc.), the ⏏ indicator flashes in the viewfinder. If this happens, none of the functions except cassette ejection will work.
Eject the cassette and leave it for about 1 hour.
If the ⏏ indicator does not light up when you insert the cassette and press a tape transport button, you can use the camcorder again.

On the Lens

No indicator will appear, but the picture becomes dim. Turn off the power and do not use the camcorder for about 1 hour.

How to Prevent Moisture Condensation

When bringing the camcorder from a cold place to a warm place, put the camcorder in a plastic bag and allow it to adapt to room conditions over a period of time.
(1) Be sure to tightly seal the plastic bag containing the camcorder.
(2) Remove the bag when the air temperature inside it has reached the temperature surrounding it (after about one hour).

Video Head Cleaning

To ensure clear pictures, clean the video heads periodically. When playback pictures are "noisy" or hardly visible, the video heads may be contaminated.

[a] ⟶ [b]

[a] Slight contamination
[b] Critical contamination
If this happens, clean the video heads with the Sony V8-25CLH cleaning cassette (not supplied). After checking the picture, if it is still "noisy", repeat the cleaning. (Do not repeat cleaning more than 5 times.)

Caution
Do not use a commercially available wet-type cleaning cassette. It may damage the video heads.

Note
If the V8-25CLH cleaning cassette is not available in your area, consult your nearest Sony dealer.

Removing Dust from inside the Viewfinder

(1) While sliding the viewfinder release knob to the left, flip open the viewfinder. **(2)** Clean the surface with a commercially available blower.

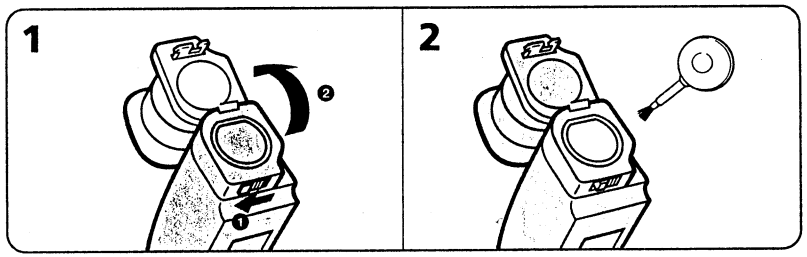

Moisture Condensation

If the camcorder is brought directly from a cold place to a warm place, moisture may condense inside the camcorder, on the surface of the tape, or on the lens. If this happens, the tape may stick to the head drum and be damaged or the camcorder may not operate correctly. To prevent possible damage under these circumstances, the camcorder is furnished with moisture sensors. However, take the following precautions.

Inside the Camcorder

When 💧 and ⚠ indicators flash in the viewfinder, moisture has condensed inside the camcorder. If this happens, none of the functions except ejection will work.
Eject the cassette tape, turn off the camcorder, and leave it with the cassette compartment open for about 1 hour.
If the 💧 indicator does not light up when you turn on the power, you can use the camcorder again.

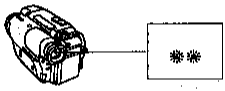

On the Surface of the Tape

If there is moisture on the surface of the tape, when you insert cassette and press a tape transport button (▶ PLAY, etc), the ⚠ indicator flashes in the viewfinder. If this happens, none of the functions except cassette ejection will work.
Eject the cassette and leave it for about 1 hour.
If the ⚠ indicator does not light up when you insert the cassette and press a tape transport button, you can use the camcorder again.

On the Lens

No indicator will appear, but the picture becomes dim. Turn off the power and do not use the camcorder for about 1 hour.

How to Prevent Moisture Condensation

When bringing the camcorder from a cold place to a warm place, put the camcorder in a plastic bag and allow it to adapt to room conditions over a period of time.
(1) Be sure to tightly seal the plastic bag containing the camcorder.
(2) Remove the bag when the air temperature inside it has reached the temperature surrounding it (after about one hour).

Video Head Cleaning

To ensure clear pictures, clean the video heads periodically. When playback pictures are "noisy" or hardly visible, the video heads may be contaminated.

[a] Slight contamination
[b] Critical contamination
If this happens, clean the video heads with the Sony V8-25CLH cleaning cassette (not supplied). After cleaning the picture, if it is still "noisy", repeat the cleaning. (Do not repeat cleaning more than 5 times.)

Caution
Do not use a commercially available wet-type cleaning cassette. It may damage the video heads.

Note
If the V8-25CLH cleaning cassette is not available in your area, consult your nearest Sony dealer.

Removing Dust from Inside the Viewfinder

(1) While sliding the viewfinder release knob to the left, flip open the viewfinder. (2) Clean the surface with a commercially available blower.

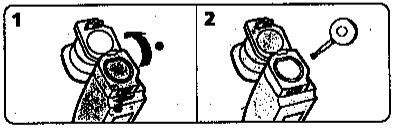

Maintenance Information and Precautions

Precautions

Camcorder Operation

- Operate the camcorder using 6.0 V (battery pack), or 7.5 V (AC power adaptor).
- For DC or AC operation, use only the accessories recommended in this manual.
- Should any solid object or liquid fall into the casing, unplug the camcorder and have it checked by your nearest Sony dealer before operating it any further.
- Avoid rough handling or mechanical shock. Be particularly careful of the lens.
- Keep the POWER switch set to OFF when not using the camera.
- Do not wrap up the camcorder and operate it since heat may build up internally.
- Keep the camcorder away from strong magnetic fields or mechanical vibration.

On Handling Tapes

Do not insert anything into the small holes on the rear of the cassette. These holes are used to sense the type, thickness of tape, or if the tab is out or in.

Camcorder Care

- When the camcorder is not to be used for a long time, disconnect the power source and remove the tape. Periodically turn on the power, operate the camera and player sections and play back a tape for about 3 minutes.
- Clean the lens with a soft brush to remove dust. If there are fingerprints on the lens, remove them with a soft cloth.
- Clean the camcorder body with a soft dry cloth, or a soft cloth lightly moistened with a mild detergent solution. Do not use any type of solvent which may damage the finish.

AC Power Adaptor

Charging

- Use only for the specified battery pack. This unit cannot be used to charge an NP-500 series battery pack.
- Attach the battery pack firmly.
- Charge the battery pack on a flat surface without vibration.

Others

- The model for USA or Canada: One blade of the plug is wider than the other for the purpose of safety and will fit into the power outlet only one way. If you are unable to insert the plug fully into the outlet, contact your dealer.
- Unplug the unit from the wall (mains) outlet when not in use for a long time. To disconnect the cord (mains lead), pull it out by the plug. Never pull the cord itself.
- Do not operate the unit with a damaged cord or if the unit has been dropped or damaged.
- Do not bend the AC power cord forcibly, or put a heavy object on it. This will damage the cord and may cause a fire or an electrical shock.
- Be sure that nothing metallic comes into contact with the metal parts of the connecting plate. If this happens, a short may occur and the unit may be damaged.
- Always keep the metal contacts clean.
- Do not disassemble the unit.
- Do not apply mechanical shock or drop the unit.
- While the unit is in use, particularly during charging, keep it away from AM receivers and video equipment because it will disturb AM reception and video operation.
- The unit becomes warm while in use. This is normal.
- Do not place the unit in locations that are:
  - Extremely hot or cold
  - Dusty or dirty
  - Very humid
  - Vibrating

If any difficulty should arise, unplug the unit and contact your nearest Sony dealer.

Identifying the Parts

The illustrations in this section are of CCD-TR82.

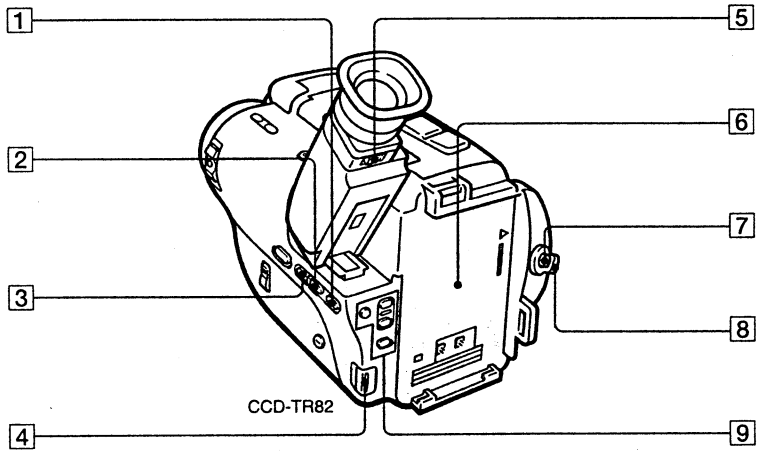

1 **COUNTER RESET button** (p.12)

2 **TIME button** (p.20)

3 **DATE button** (p.20)

4 **BATT (battery) release knob** (p.8)

5 **Viewfinder release knob** (p.14, 37)

6 **Battery mounting surface** (p.8)

7 **START/STOP button** (p.11)

8 **STANDBY switch** (p.10, 11)

9 **Menu operation buttons** (p.25, 31)

Maintenance Information and Precautions

Precautions

Camcorder Operation

- Operate the camcorder using 6.0 V (battery pack), or 7.5 V (AC power adaptor).
- For DC or AC operation, use only the accessories recommended in this manual.
- Should any solid object or liquid fall into the casing, unplug the camcorder and have it checked by your nearest Sony dealer before operating it any further.
- Avoid rough handling or mechanical shock. Be particularly careful of the lens.
- Keep the POWER switch set to OFF when not using the camera.
- Do not wrap up the camcorder and operate it since heat may build up internally.
- Keep the camcorder away from strong magnetic fields or mechanical vibration.

On Handling Tapes

Do not insert anything into the small holes on the rear of the cassette. These holes are used to sense the type, thickness of tape, or if the tab is out or in.

Camcorder Care

- When the camcorder is not to be used for a long time, disconnect the power source and remove the tape. Period-ically turn on the power, operate the camera and player sections and play back a tape for about 3 minutes.
- Clean the lens with a soft brush to remove dust. If there are fingerprints on the lens, remove them with a soft cloth.
- Clean the camcorder body with a soft dry cloth, or a soft cloth lightly moistened with a mild detergent solution. Do not use any type of solvent which may damage the finish.

AC Power Adaptor

Charging

- Use only for the specified battery pack. This unit cannot be used to charge an NP-500 series battery pack.
- Attach the battery pack firmly.
- Charge the battery pack on a flat surface without vibration.

Others

- The model for USA or Canada: One blade of the plug is wider than the other for the purpose of safety and will fit into the power outlet only one way. If you are unable to insert the plug fully into the outlet, contact your dealer.
- Unplug the unit from the wall (mains) outlet when not in use for a long time. To disconnect the cord (mains lead), pull it out by the plug. Never pull the cord itself.
- Do not operate the unit with a damaged cord or if the unit has been dropped or damaged.
- Do not bend the AC power cord forcibly, or put a heavy object on it. This will damage the cord and may cause a fire or an electrical shock.
- Be sure that nothing metallic comes into contact with the metal parts of the connecting plate. If this happens, a short may occur and the unit may be damaged.
- Always keep the metal contacts clean.
- Do not disassemble the unit.
- Do not apply mechanical shock or drop the unit.
- While the unit is in use, particularly during charging, keep it away from AM receivers and video equipment because it will disturb AM reception and video operation.
- The unit becomes warm while in use. This is normal.
- Do not place the unit in locations that are:
  - Extremely hot or cold
  - Dusty or dirty
  - Very humid
  - Vibrating

If any difficulty should arise, unplug the unit and contact your nearest Sony dealer.

Identifying the Parts

The illustrations in this section are of CCD-TR82.

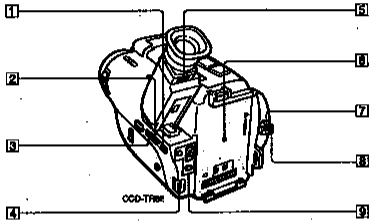

1 COUNTER RESET button (p.12)

2 TIME button (p.20)

3 DATE button (p.20)

4 BATT (battery) release knob (p.8)

5 Viewfinder release knob (p.14, 37)

6 Battery mounting surface (p.8)

7 START/STOP button (p.12)

8 STANDBY switch (p.10, 11)

9 Menu operation buttons (p.28, 31)

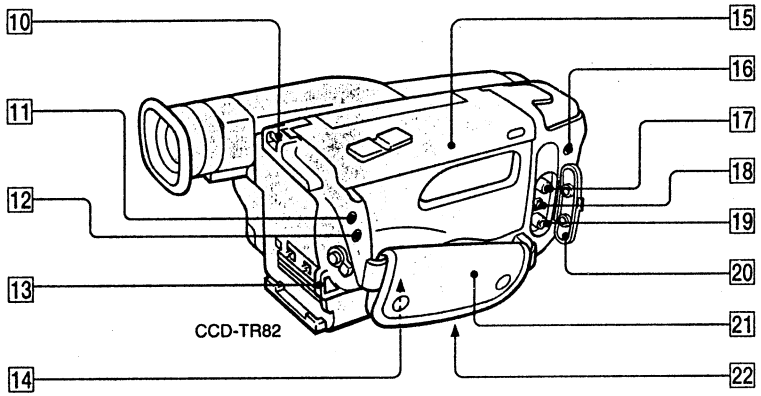

10 **Hook for shoulder strap** (below)

11 **LANC control jack**
Connect the LANC connecting cable to a wired remote control unit such as an editing controller. In this case, set the COMMANDER mode to OFF in the menu system (p.25).
stands for Local Application Control Bus sytem. The control jack is used for controlling the tape transport of video equipment and peripherals connected to it. This jack has the same function as the connectors indicated as CONTROL L or REMOTE.

12 **(earphone) jack (CCD-TR42/TR70/TR82)** (p.15)
(headphones) jack (CCD-TR72/TR80) (p.15)

13 **Hook for shoulder strap** (below)

14 **Lithium battery compartment** (p.30)

15 **Cassette compartment lid** (p.9)

16 **MIC (microphone) jack**

17 **VIDEO jack** (p.16)

18 **RFU DC OUT (RFU adaptor DC out) jack** (p.16)

19 **AUDIO jack** (p.16)

20 **Jack cover**

21 **Grip strap** (p.14)

22 **Tripod receptacle** (p.14)
Attach a tripod (not supplied) here.
When attaching a non-Sony tripod, make sure that the length of the camera mounting screw is shorter than 9/32 inches (6.5 mm).
Otherwise, the screw might damage the inner part of the camcorder.

Attaching the shoulder strap
Attach the supplied shoulder strap to the hooks for the shoulder strap (10, 13).

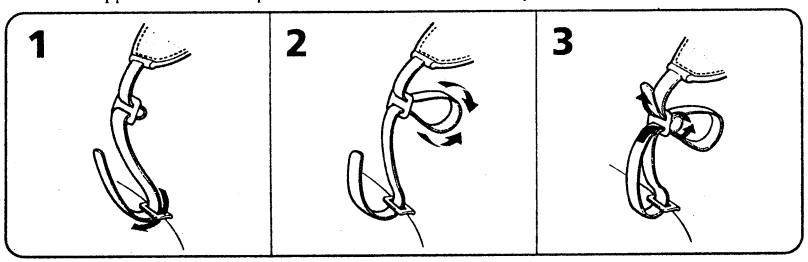

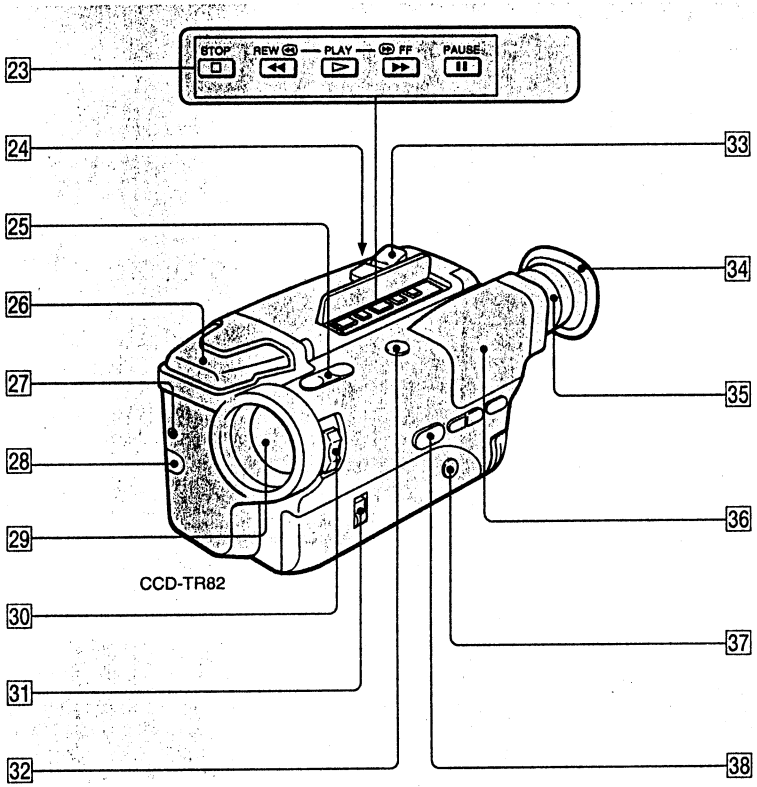

23 **Tape transport buttons** (p.17)
■ STOP
◁◁ REW (rewind)
▷ PLAY (playback)
▷▷ FF (fast forward)
❚❚ PAUSE
These buttons will function in PLAYER mode.

24 **EJECT button** (p.9)

25 **EDITSEARCH button** (p.15)

26 **Built-in microphone**

27 **Camera recording/battery lamp**

28 **Remote sensor** (p.49)

29 **Lens cover**

30 **POWER switch** (p.10, 11)

31 **STEADY SHOT switch** (p.24)

32 **FADER button** (p.23)

33 **POWER ZOOM button** (p.13)

34 **Eyecup** (p.14)

35 **Viewfinder adjustment ring** (p.10)

36 **Viewfinder** (p.10, 14)

37 **BACK LIGHT button** (p.21)

38 **PROGRAM AE button** (p.22)

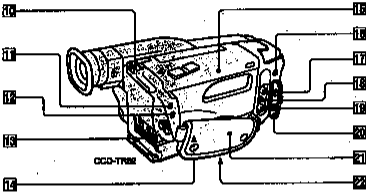

10 Hook for shoulder strap (below)

11 LANC 12 control jack
Connect the LANC 12 connecting cable to a wired remote control unit such as an editing controller. In this case, set the COMMANDER mode to OFF in the menu system (p.20).
12 stands for Local Application Control Bus system. The 12 control jack is used for controlling the tape transport of video equipment and peripherals connected to it. This jack has the same function as the connector indicated as CONTROL L or REMOTE.

12 🎧 (earphone) jack (CCD-TR82/TR77/TR83) (p.15)
🎧 (headphone) jack (CCD-TR72/TR88) (p.15)

13 Hook for shoulder strap (below)

14 Lithium battery compartment (p.30)

15 Cassette compartment lid (p.9)

16 MIC (microphone) jack

17 VIDEO jack (p.16)

18 RFU DC OUT (RFU adaptor DC out) jack (p.16)

19 AUDIO jack (p.16)

20 Jack cover

21 Grip strap (p.14)

22 Tripod receptacle (p.14)
Attach a tripod (not supplied) here.
When attaching a non-Sony tripod, make sure that the length of the camera mounting screw is shorter than 9/32 inches (5.5 mm). Otherwise, the screw might damage the lower part of the camcorder.

Attaching the shoulder strap
Attach the supplied shoulder strap to the hooks for the shoulder strap (10, 13).

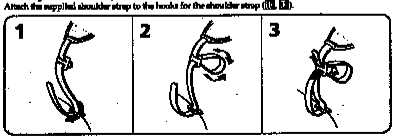

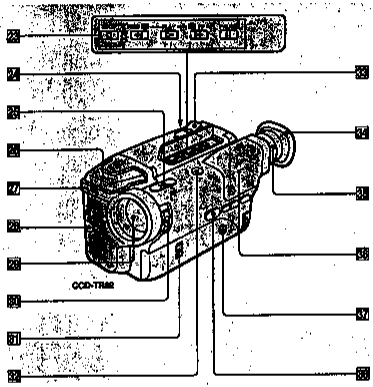

23 Tape transport buttons (p.17)
■ STOP
◁◁ REW (rewind)
▷ PLAY (playback)
▷▷ FF (fast forward)
II PAUSE
These buttons will function in PLAYER mode.

24 EJECT button (p.9)

25 EDITSEARCH button (p.18)

26 Built-in microphone

27 Camera recording/battery lamp

28 Remote sensor (p.49)

29 Lens cover

30 POWER switch (p.10, 11)

31 STEADY SHOT switch (p.24)

32 FADER button (p.23)

33 POWER ZOOM button (p.13)

34 Eyecup (p.14)

35 Viewfinder adjustment ring (p.10)

36 Viewfinder (p.34, 16)

37 BACK LIGHT button (p.21)

38 PROGRAM AE button (p.22)

Remote Commander

The buttons that have the same name on the Remote Commander and on the camcorder function identically.

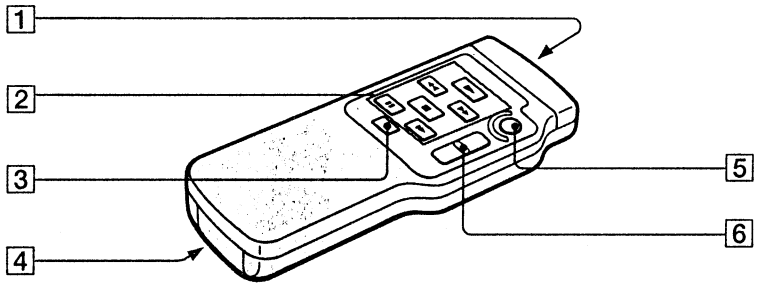

1 **Transmitter** (p.49)
Point toward the remote sensor to control the camcorder after turning on the POWER switch on the camcorder.

2 **Tape transport buttons** (p.17)

3 **DISPLAY button** (p.18)

4 **Size AA (R6) battery holder**

5 **START/STOP button**

6 **Power zoom button**
The zooming speed is unchangeable on the Remote Commander.

Preparing the Remote Commander

To use the Remote Commander, you must insert two size AA (R6) batteries. Use the supplied size AA (R6) batteries.
(1) Remove the battery cover from the Remote Commander. **(2)** Insert both of the size AA (R6) batteries with correct polarity. **(3)** Put the battery cover back onto the Remote Commander.

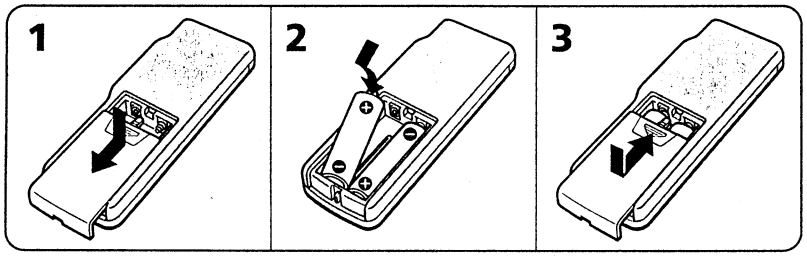

Note on battery life
The batteries for the Remote Commander last about 6 months under normal operation. When the batteries become weak or daed, the Remote Commander does not work.

To avoid damage from possible battery leakage
Remove the batteries when you will not use the Remote Commander for a long time.

Using the Remote Commander

Make sure that the COMMANDER mode is set to ON in the menu system (p.25).

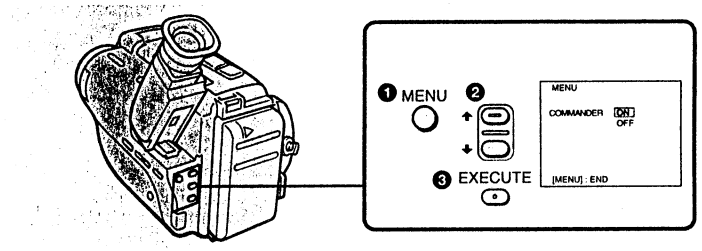

Remote Control Direction

Aim the Remote Commander to the remote sensor within the range as shown below.

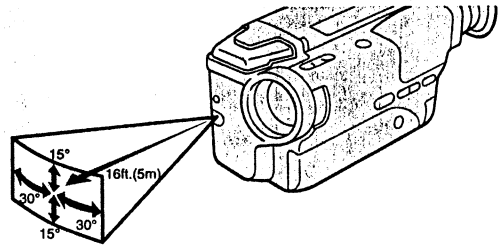

Notes on the Remote Commander

- Keep the remote sensor away from strong light sources such as direct sunlight or illumination. Otherwise, the remote control may not be effective.
- Be sure that there is no obstacle between the remote sensor and the Remote Commander.
- This camcorder works at commander mode VTR 2. The commander modes (1, 2, and 3) are used to distinguish this camcorder from other Sony VCRs to avoid remote control misoperation. If you use another Sony VCR at commander mode VTR 2, we recommend you change the commander mode or cover the remote sensor of the VCR with black paper.

Remote Commander

The buttons that have the same name on the Remote Commander and on the camcorder function identically.

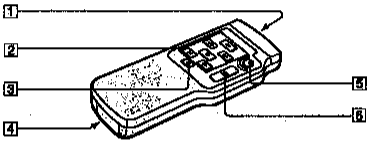

1 Transmitter (p.49)
Point toward the remote sensor to control the camcorder after turning on the POWER switch on the camcorder.

2 Tape transport buttons (p.17)

3 DISPLAY button (p.18)

4 Size AA (R6) battery holder

5 START/STOP button

6 Power zoom button
The zooming speed is unchangeable on the Remote Commander.

Preparing the Remote Commander

To use the Remote Commander, you must insert two size AA (R6) batteries. Use the supplied size AA (R6) batteries.
(1) Remove the battery cover from the Remote Commander. (2) Insert both of the size AA (R6) batteries with correct polarity. (3) Put the battery cover back into the Remote Commander.

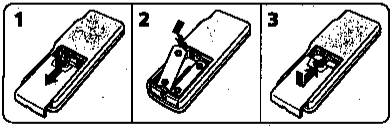

Note on battery life
The batteries for the Remote Commander last about 6 months under normal operation. When the batteries become weak or dead, the Remote Commander does not work.

To avoid damage from possible battery leakage
Remove the batteries when you will not use the Remote Commander for a long time.

Using the Remote Commander

Make sure that the COMMANDER mode is set to ON in the menu system (p.28).

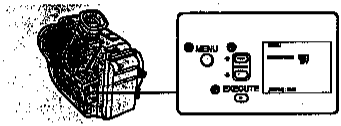

Remote Control Direction

Aim the Remote Commander to the remote sensor within the range as shown below.

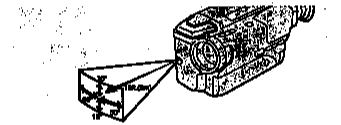

Notes on the Remote Commander

- Keep the remote sensor away from strong light sources such as direct sunlight or illumination. Otherwise, the remote control may not be effective.
- Be sure that there is no obstacle between the remote sensor and the Remote Commander.
- This camcorder works at commander mode VTR 2. The camcorder modes (1, 2, and 3) are used to distinguish this camcorder from other Sony VCRs to avoid remote control misoperation. If you use another Sony VCR at commander mode VTR 2, we recommend you change the camcorder mode or cover the remote sensor of the VCR with black paper.

2-14. CIRCUIT BOARDS LOCATION

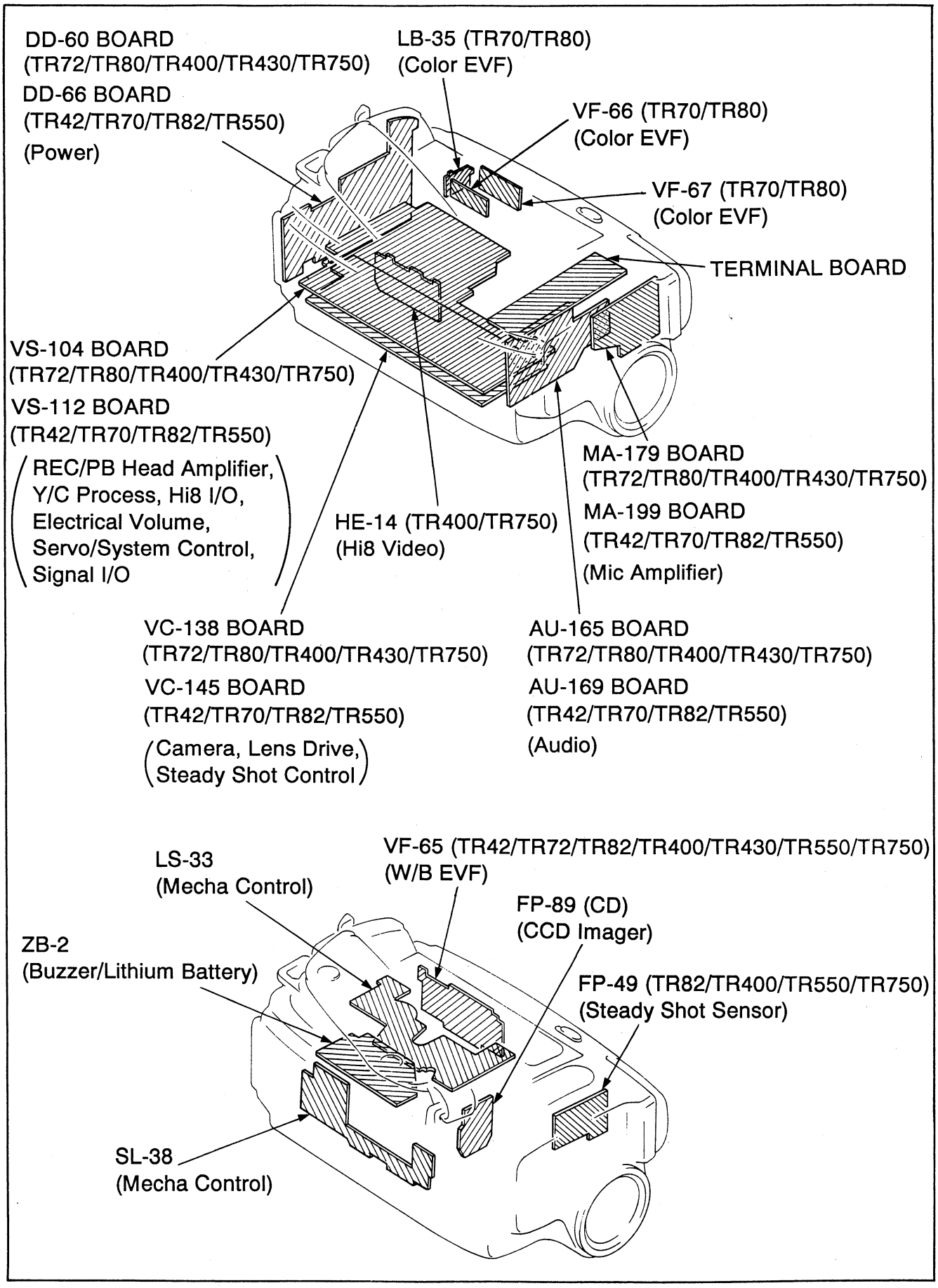

2-14. CIRCUIT BOARDS LOCATION

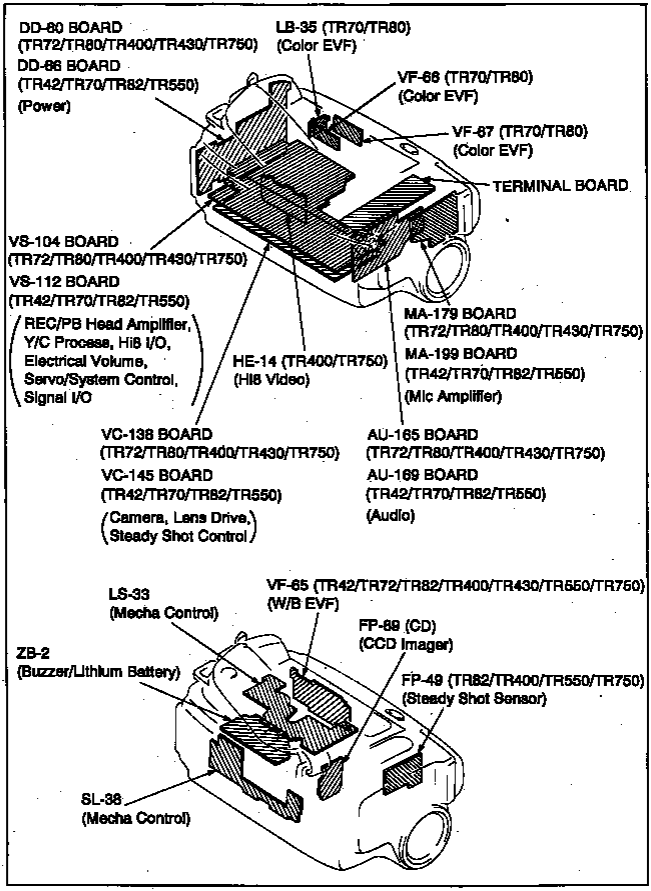

ZB-2 (BUZZER/LITHIUM BATTERY) PRINTED WIRING BOARD

— Ref. No. ZB-2 BOARD: 4000 series —

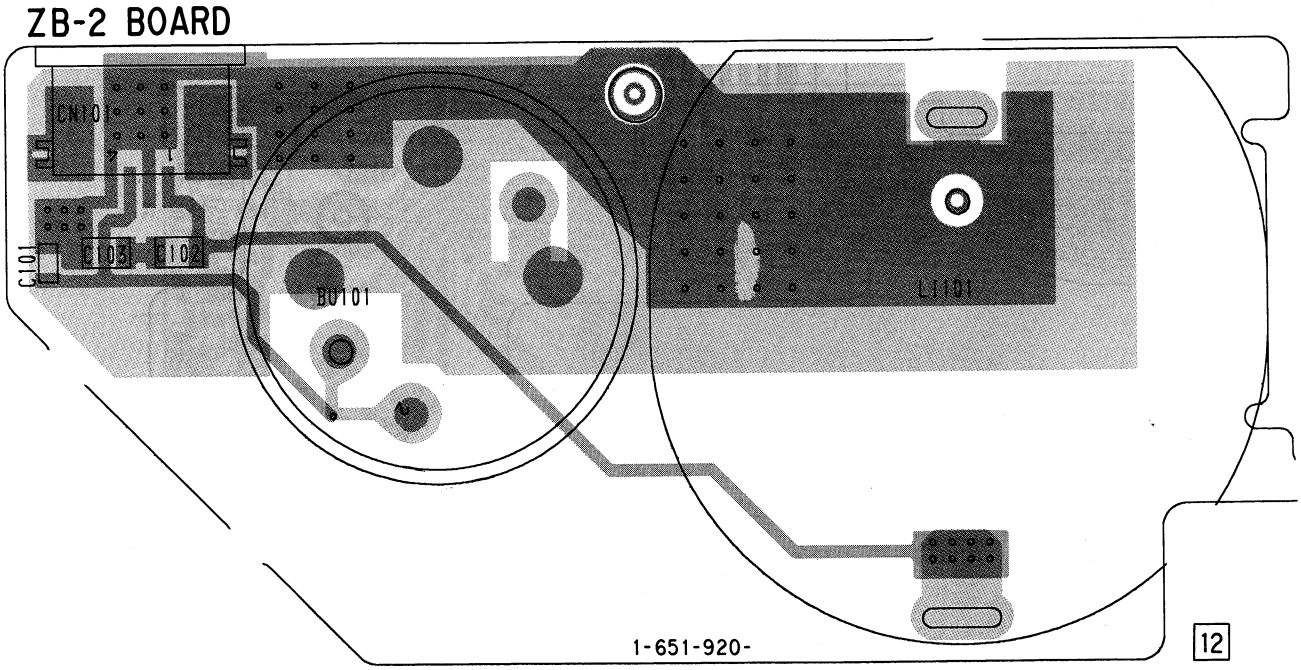

- **For printed wiring board of ZB-2 board.**
- : Pattern from the side which enables seeing.
- : Pattern of the rear side.

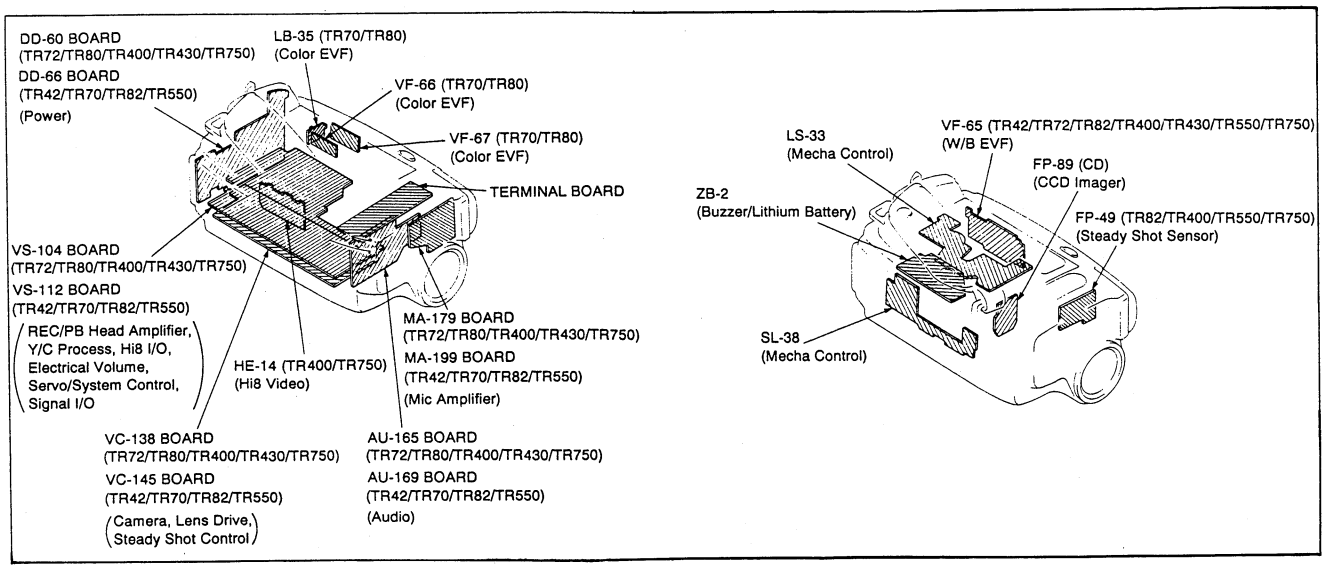

ZB-2 (BUZZER/LITHIUM BATTERY) PRINTED WIRING BOARD

— Ref. No. ZB-2 BOARD: 4000 series —

ZB-2 BOARD

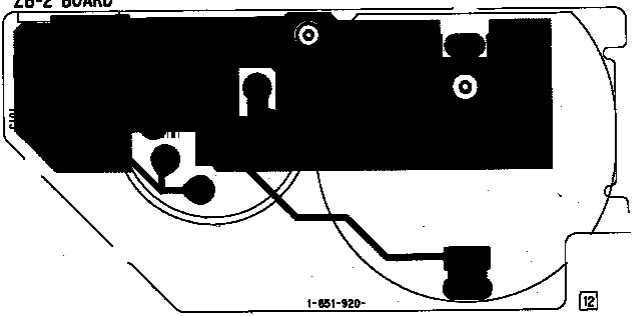

- For printed wiring board of ZB-2 board.
- ■ : Pattern from the side which enables seeing.
- ■ : Pattern of the rear side.

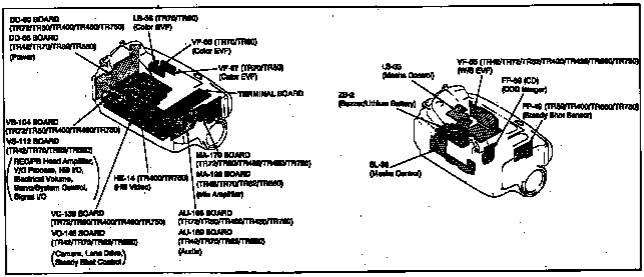

ZB-2 (BUZZER/LITHIUM BATTERY) SCHEMATIC DIAGRAM

— Ref. No. ZB-2 BOARD: 4000 series —

ZB-2 BOARD

·CONTROL SWITCH BLOCK (CK)
is replaced as a block, so that there
SCHEMATIC DIAGRAM
PRINTED WIRING BOARD
is omitted.

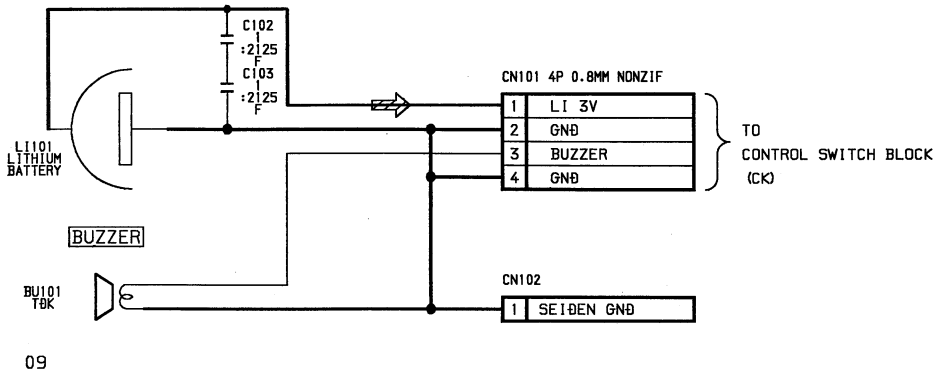

ZB-2 (BUZZER/LITHIUM BATTERY) ●SCHEMATIC DIAGRAM

— Ref. No. ZB-2 BOARD: 4000 series —

ZB-2 BOARD

•CONTROL SWITCH BLOCK (CS)
Is replaced as a block, so that there
SCHEMATIC DIAGRAM
PRINTED WIRING BOARD
Is omitted.

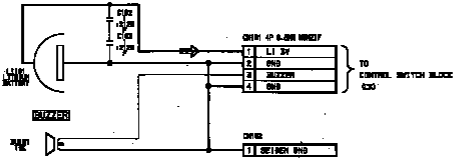

VF-65 (W/B EVF) PRINTED WIRING BOARD (TR42/TR72/TR82/TR400/TR430/TR550/TR750)

— Ref. No. VF-65 BOARD: 8000 series —

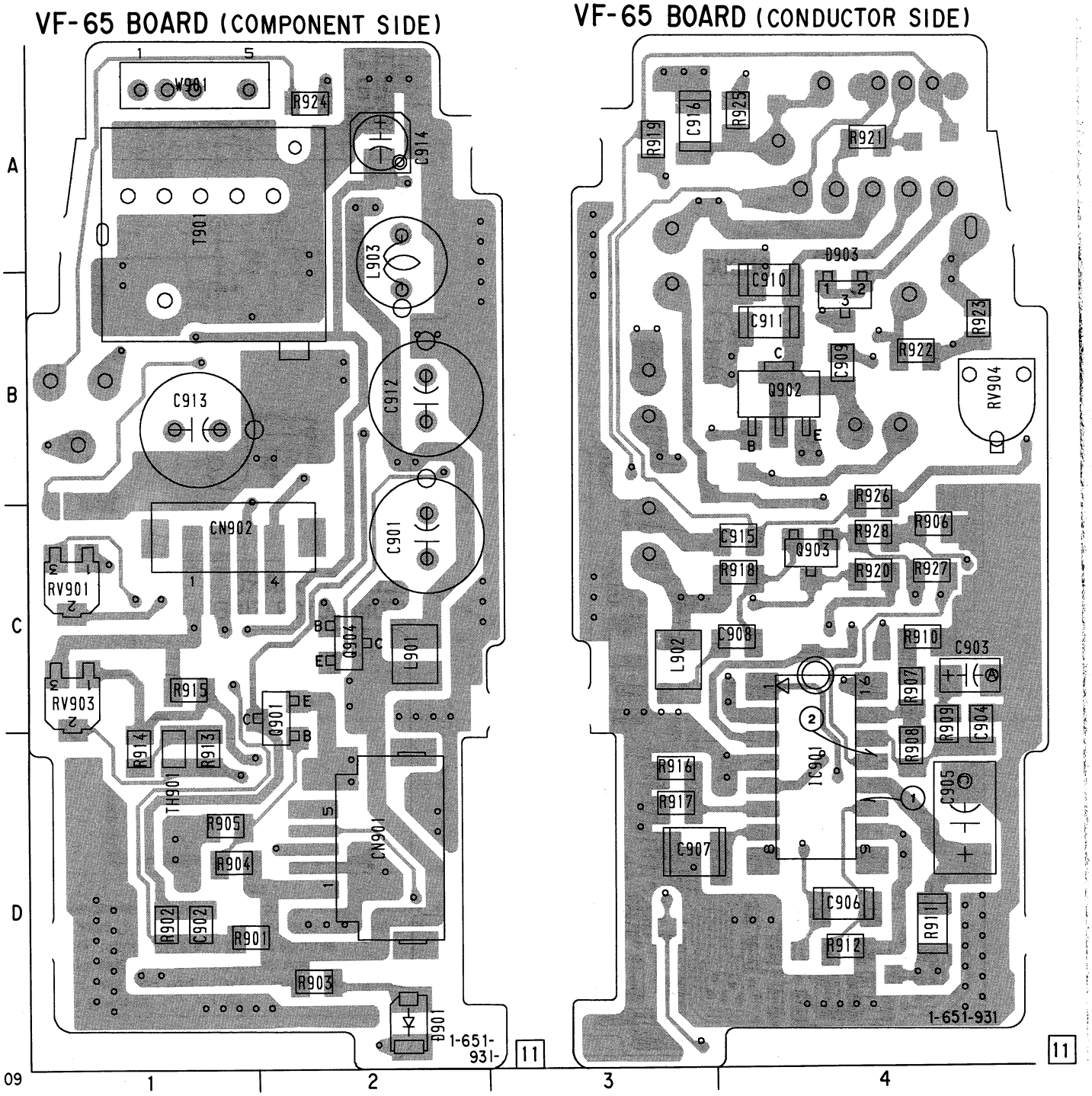

- **For printed wiring boards.**
- VF-65 board is a four-layer print board. However, the patterns of layers 2 to 3 have not been included in the diagram.

VF-65 (W/B EVF) PRINTED WIRING BOARD (TR42/TR72/TR82/TR400/TR430/TR550/TR750)

— Ref. No. VF-65 BOARD: 8000 series —

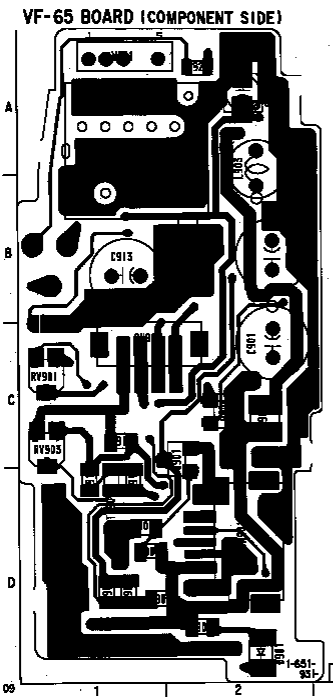

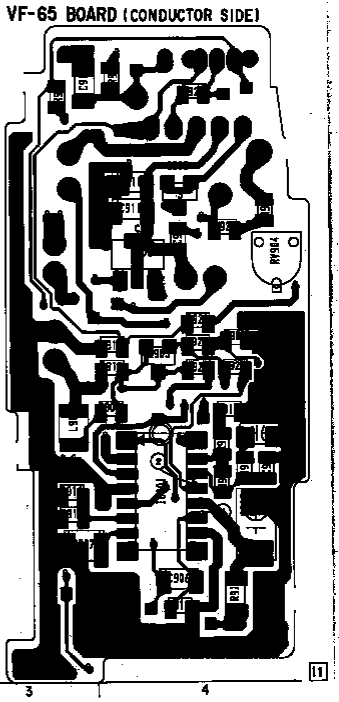

- For printed wiring boards.
- VF-65 board is a four-layer print board. However, the patterns of layers 2 to 3 have not been included in the diagram.

5-1-10. MECHANISM CHASSIS ASSEMBLY (1)

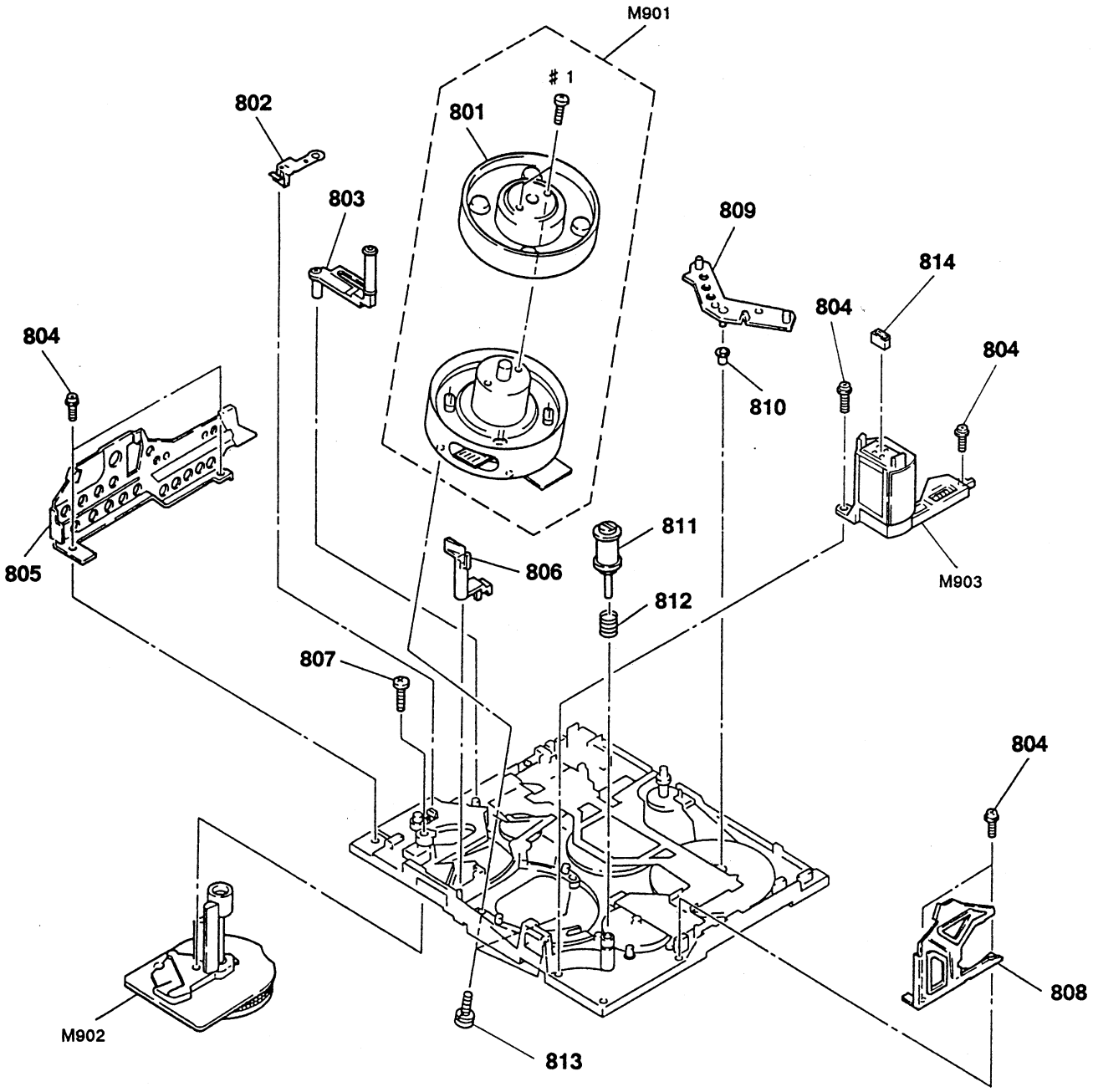

Ref. No.	Part No.	Description	Remark
801	A-7049-501-A	DRUM ASSY, UPPER (DGR-78-R) (TR42/TR70/TR72/TR80/TR82/TR430/TR550)	
801	A-7049-567-A	DRUM ASSY, UPPER (DGR-92-R) (TR400/TR750)	
802	3-945-822-01	SPRING, LEAF, TG7 ARM	
803	A-7040-305-A	ARM BLOCK ASSY, TG7	
804	3-947-503-01	SCREW (M1.4X2.5)	
805	X-3941-255-1	PLATE (T) ASSY, SIDE	
806	3-945-735-01	ARM, HC CONVERSION	
807	3-713-786-71	SCREW (M2X5)	
808	3-945-691-01	PLATE (S), SIDE	
809	3-945-701-01	ARM, LS	
810	3-945-702-01	ROLLER, LS	
811	X-3941-262-1	ROLLER ASSY, TG2	
812	3-956-651-01	SPRING, COMPRESSION	
813	3-686-493-01	SCREW (M2X5), P1	
814	1-568-323-11	CONNECTOR, BOARD TO BOARD 4P	
M901	A-7048-564-A	DRUM ASSY (DGH-78A-R) (TR42/TR70/TR72/TR80/TR82/TR430/TR550)	
M901	A-7048-633-A	DRUM ASSY (DGH-92A-R) (TR400/TR750)	
M902	8-835-477-12	MOTOR, DC SCE-0101A (CAPSTAN)	
M903	A-7040-304-A	MOTOR BLOCK ASSY, LM (LOADING)	

5-1-10. MECHANISM CHASSIS ASSEMBLY (1)

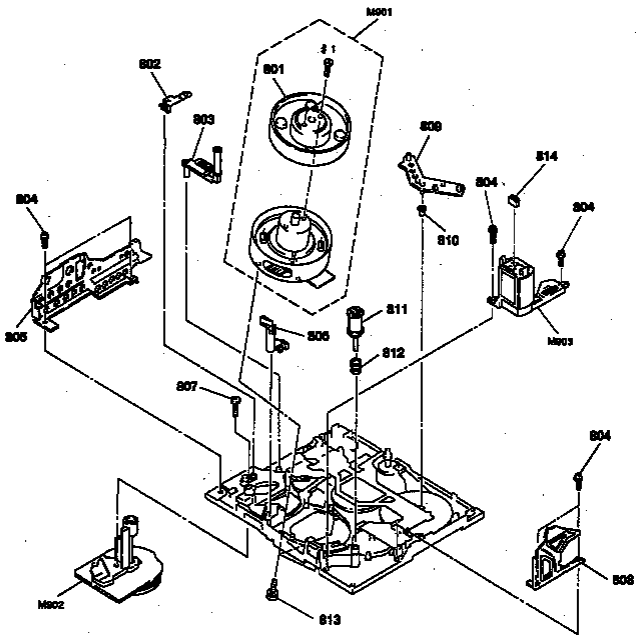

Ref.No.	Part No.	Description	Remark
801	A-7049-501-A	DRUM ASSY, UPPER (DCR-TR-K) (TR42/TR70/TR72/TR80/TR82/TR430/TR550)	
801	A-7049-587-A	DRUM ASSY, UPPER (DCR-SR-K) (TR400/TR750)	
802	3-945-622-01	SPRING, LEAF, TGT ARM	
803	A-7040-305-A	ARM BLOCK ASSY, TGT	
804	3-947-503-01	SCREW (M1.4X2.5)	
805	X-3941-265-1	PLATE (1) ASSY, SIDE	
806	3-945-725-01	ARM, PC CONVERSION	
807	3-712-786-71	SCREW (M2X5)	
808	3-945-691-01	PLATE (S), SIDE	
809	3-945-701-01	ARM, LS	
810	3-945-702-01	ROLLER, LS	
811	X-3941-383-1	ROLLER ASSY, TGS	
812	3-951-651-01	SPRING, COMPRESSION	
813	3-885-893-01	SCREW (M2X10), PT	
814	1-569-339-11	CONNECTOR, BOARD TO BOARD 4P	
M901	A-7048-564-A	DRUM ASSY (DCR-TR-K) (TR42/TR70/TR72/TR80/TR82/TR430/TR550)	
M901	A-7048-633-A	DRUM ASSY (DCR-SR-K) (TR400/TR750)	
M902	8-835-477-12	MOTOR, DC SCR-0101A (CAPSTAN)	
M903	A-7040-304-A	MOTOR BLOCK ASSY, LM (LOADING)	

5-1-11. MECHANISM CHASSIS ASSEMBLY (2)

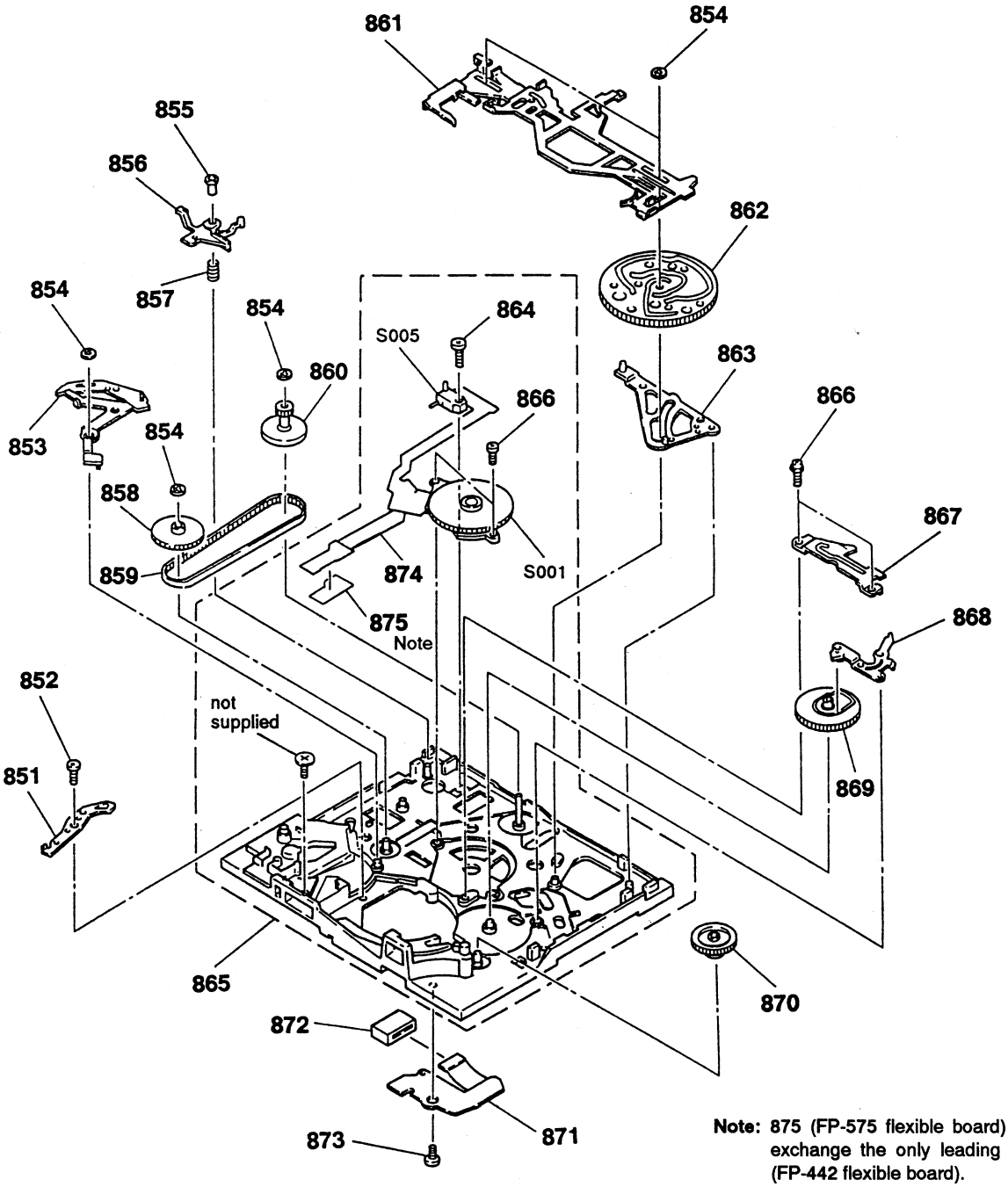

Note: 875 (FP-575 flexible board) is part that exchange the only leading part of 874 (FP-442 flexible board).

Ref. No.	Part No.	Description	Remark
851	3-945-734-01	ARM, HC DRIVING	
852	3-728-103-11	SCREW (M1.4X1.6), SPECIAL HEAD	
853	X-3941-259-1	ARM ASSY, PINCH PRESS	
854	3-726-829-01	WASHER, STOPPER	
855	3-945-730-01	SLEEVE, EJECT	
856	3-945-706-01	LEVER, EJECT	
857	3-945-729-01	SPRING, COMPRESSION	
858	X-3941-256-1	GEAR ASSY, CHANGE	
859	3-944-539-01	BELT, RELAY	
860	3-945-695-01	PULLEY, RELAY	
861	X-3941-260-1	SLIDER ASSY, M	
862	3-945-696-02	CAM	
863	X-3941-258-1	ARM ASSY, GL	
864	3-713-786-71	SCREW (M2X5)	
865	A-7040-303-A	CHASSIS ASSY, MECHANICAL	
866	3-947-503-01	SCREW (M1.4X2.5)	
867	3-945-722-01	RETAINER, GEAR	
868	X-3941-257-1	ARM ASSY, FF	
869	3-945-697-01	GEAR (B), L	
870	3-945-700-01	GEAR (A), L	
871	1-641-643-12	FP-444 FLEXIBLE BOARD	
872	1-691-254-13	CONNECTOR, TRANSLATION 10P	
873	3-945-756-01	SCREW (M1.4X3)	
874	1-641-639-13	FP-442 FLEXIBLE BORD	
875	1-645-271-11	FP-575 FLEXIBLE BORD	
S001	1-572-986-11	SWITCH, ROTARY (ENCODER)	
S005	1-570-771-21	SWITCH (C DOWN)	

5-1-11. MECHANISM CHASSIS ASSEMBLY (2)

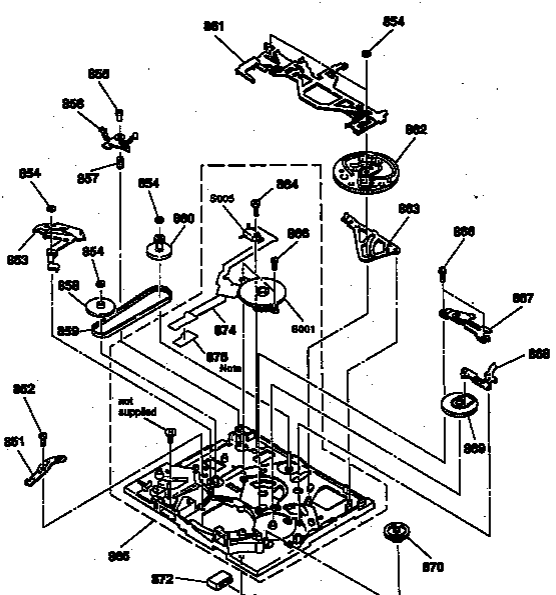

Note: 875 (FP-575 flexible board) is part that exchange the only leading part of 874 (FP-442 flexible board).

Ref. No.	Part No.	Description	Remark
851	3-945-734-01	ARM, DC DRIVING	
852	3-725-109-11	SCREW (BH, 4T1.8), SPECIAL HEAD	
853	X-3941-259-1	ARM ASSY, PINCH PRESS	
854	3-725-829-01	WASHER, STOPPER	
855	3-945-730-01	SLEEVE, EJECT	
856	3-945-706-01	LEVER, EJECT	
857	3-945-729-01	SPRING, COMPRESSION	
858	X-3941-258-1	GEAR ASSY, CHANGE	
859	3-944-598-01	BELT, RELAY	
860	3-945-896-01	PULLEY, RELAY	
861	X-3941-260-1	SLIDER ASSY, W	
862	3-945-828-02	CAM	
863	X-3941-258-1	ARM ASSY, GL	
864	3-713-788-71	SCREW (BRZZS)	
865	A-7040-303-A	CHASSIS ASSY, MECHANICAL	
866	3-947-608-01	SCREW (BH, 4X2.5)	
867	3-945-722-01	METALHEED, GEAR	
868	X-3941-257-1	ARM ASSY, FF	
869	3-945-697-01	GEAR (B), L	
870	3-945-700-01	GEAR (A), L	
871	1-541-648-12	FP-444 FLEXIBLE BOARD	
872	1-681-254-13	CONNECTOR, TRANSLATION 10P	
873	3-945-798-01	SCREW (BH, 4X3)	
874	1-541-639-13	FP-442 FLEXIBLE BORD	
875	1-545-211-11	FP-575 FLEXIBLE BORD	
S001	1-572-896-11	SWITCH, ROTARY (ENCODER)	
S005	1-570-771-21	SWITCH (C DOWN)	

5-2. ELECTRICAL PARTS LIST

NOTE:

The components identified by mark ⚠ or dotted line with mark ⚠ are critical for safety.
Replace only with part number specified.

Les composants identifiés par une marque ⚠ sont critiques pour la sécurité.
Ne les remplacer que par une piéce portant le numéro spécifié.

When indicating parts by reference number, please include the board name.

- Due to standardization, replacements in the parts list may be different from the parts specified in the diagrams or the components used on the set.
- -XX, -X mean standardized parts, so they may have some difference from the original one.
- RESISTORS
  All resistors are in ohms
  METAL: Metal-film resistor
  METAL OXIDE: Metal Oxide-film resistor
  F : nonflammable
- Hardware (# mark) list is given in the last of this parts list.
- Canadian model is abbreviated as CND.
- Items marked "*" are not stocked since they are seldom required for routine service. Some delay should be anticipated when ordering these items.
- SEMICONDUCTORS
  In each case, u: μ , for example:
  uA...: μA..., uPA...: μPA...,
  uPB...: μPB..., uPC...: μPC...,
  uPD...: μPD...
- CAPACITORS
  uF : μF
- COILS
  uH : μH

Ref. No.	Part No.	Description			Remark
*	A-7063-958-A	AU-165 BOARD, COMPLETE			
		**********			
		(TR72/TR80/TR400/TR430/TR750)			
		(Ref. No. 10,000 Series)			
		< CAPACITOR >			
C1302	1-162-970-11	CERAMIC CHIP	0.01uF	10%	25V
C1303	1-164-004-11	CERAMIC CHIP	0.1uF	10%	25V
C1304	1-135-181-21	TANTALUM CHIP	4.7uF	20%	6.3V
C1305	1-164-004-11	CERAMIC CHIP	0.1uF	10%	25V
C1306	1-126-205-11	ELECT CHIP	47uF	20%	6.3V
C1307	1-126-205-11	ELECT CHIP	47uF	20%	6.3V
C1308	1-135-181-21	TANTALUM CHIP	4.7uF	20%	6.3V
C1309	1-126-205-11	ELECT CHIP	47uF	20%	6.3V
C1310	1-126-205-11	ELECT CHIP	47uF	20%	6.3V
C1311	1-126-205-11	ELECT CHIP	47uF	20%	6.3V
C1312	1-126-205-11	ELECT CHIP	47uF	20%	6.3V
C1313	1-162-953-11	CERAMIC CHIP	100PF	5%	50V
C1314	1-162-953-11	CERAMIC CHIP	100PF	5%	50V
C1315	1-126-209-11	ELECT	100uF	20%	4V
C1316	1-135-259-11	TANTAL. CHIP	10uF	20%	6.3V
C1318	1-164-004-11	CERAMIC CHIP	0.1uF	10%	25V
C1319	1-162-953-11	CERAMIC CHIP	100PF	5%	50V
C1321	1-135-181-21	TANTALUM CHIP	4.7uF	20%	6.3V
C1323	1-164-004-11	CERAMIC CHIP	0.1uF	10%	25V
C1326	1-135-181-21	TANTALUM CHIP	4.7uF	20%	6.3V
C1327	1-135-181-21	TANTALUM CHIP	4.7uF	20%	6.3V
C1328	1-135-091-21	TANTAL. CHIP	1uF	20%	16V
C1329	1-135-091-21	TANTAL. CHIP	1uF	20%	16V
C1330	1-135-259-11	TANTAL. CHIP	10uF	20%	6.3V
C1331	1-135-259-11	TANTAL. CHIP	10uF	20%	6.3V
C1332	1-135-181-21	TANTALUM CHIP	4.7uF	20%	6.3V
C1333	1-135-181-21	TANTALUM CHIP	4.7uF	20%	6.3V
C1334	1-162-966-11	CERAMIC CHIP	0.0022uF	10%	50V
C1335	1-162-966-11	CERAMIC CHIP	0.0022uF	10%	50V
C1336	1-135-148-21	TANTAL. CHIP	1.5uF	20%	10V
C1337	1-135-148-21	TANTAL. CHIP	1.5uF	20%	10V
C1338	1-162-966-11	CERAMIC CHIP	0.0022uF	10%	50V
C1339	1-162-966-11	CERAMIC CHIP	0.0022uF	10%	50V
C1340	1-162-966-11	CERAMIC CHIP	0.0022uF	10%	50V
C1341	1-162-966-11	CERAMIC CHIP	0.0022uF	10%	50V
C1343	1-164-004-11	CERAMIC CHIP	0.1uF	10%	25V
C1344	1-164-346-11	CERAMIC CHIP	1uF		16V
C1345	1-162-967-11	CERAMIC CHIP	0.0033uF	10%	50V
C1346	1-162-970-11	CERAMIC CHIP	0.01uF	10%	25V
C1347	1-162-970-11	CERAMIC CHIP	0.01uF	10%	25V
C1348	1-164-004-11	CERAMIC CHIP	0.1uF	10%	25V
C1349	1-162-970-11	CERAMIC CHIP	0.01uF	10%	25V
C1350	1-164-004-11	CERAMIC CHIP	0.1uF	10%	25V
C1352	1-164-004-11	CERAMIC CHIP	0.1uF	10%	25V
C1353	1-164-004-11	CERAMIC CHIP	0.1uF	10%	25V
C1355	1-164-004-11	CERAMIC CHIP	0.1uF	10%	25V
C1356	1-135-259-11	TANTAL. CHIP	10uF	20%	6.3V
C1357	1-135-259-11	TANTAL. CHIP	10uF	20%	6.3V
C1358	1-162-970-11	CERAMIC CHIP	0.01uF	10%	25V
C1359	1-162-970-11	CERAMIC CHIP	0.01uF	10%	25V
C1360	1-162-970-11	CERAMIC CHIP	0.01uF	10%	25V
C1361	1-162-970-11	CERAMIC CHIP	0.01uF	10%	25V
C1362	1-162-969-11	CERAMIC CHIP	0.0068uF	10%	25V
C1363	1-162-970-11	CERAMIC CHIP	0.01uF	10%	25V
C1364	1-162-970-11	CERAMIC CHIP	0.01uF	10%	25V
		< CONNECTOR >			
CN1301	1-691-490-21	CONNECTOR, FFC/FPC 11P			
* CN1302	1-691-933-11	CONNECTOR, BOARD TO BOARD 34P			
		< DIODE >			
D1302	8-719-404-46	DIODE	MA110		
D1303	8-719-045-87	DIODE	MA4Z082WA-TX		
D1304	8-719-045-87	DIODE	MA4Z082WA-TX		
		< FILTER >			
FL402	1-236-838-21	FILTER, BAND PASS (1.7MHz)			
FL1302	1-236-837-21	FILTER, BAND PASS (1.5MHz)			
		< IC >			
IC402	8-759-234-77	IC	TC4S66F		
IC1301	8-759-159-94	IC	LA7491W-TBM		
		< TRANSISTOR >			
Q1301	8-729-230-63	TRANSISTOR	2SC4116-YG		
Q1302	8-729-230-63	TRANSISTOR	2SC4116-YG		
Q1303	8-729-403-35	TRANSISTOR	UN5113		
Q1305	8-729-230-63	TRANSISTOR	2SC4116-YG		
Q1306	8-729-230-63	TRANSISTOR	2SC4116-YG		

5-2. ELECTRICAL PARTS LIST

NOTE:

The components identified by mark ⚠ or dotted line with mark ⚠ are critical for safety.
Replace only with part number specified.

Les composants identifiés par une marque ⚠ sont critiques pour la sécurité.
Ne les remplacer que par une pièce portant le numéro spécifié.

When indicating parts by reference number, please include the board name.

- Due to standardization, replacements in the parts list may be different from the parts specified in the diagrams or the components used on the set.
- ·XX, ·X mean standardized parts, so they may have some difference from the original one.
- RESISTORS
  All resistors are in ohms
  METAL: Metal-film resistor
  METAL OXIDE: Metal Oxide-film resistor
  F : nonflammable
- Hardware (# mark) list is given in the last of this parts list.
- Canadian model is abbreviated as CND.
- Items marked "*" are not stocked since they are seldom required for routine service. Some delay should be anticipated when ordering these items.
- SEMICONDUCTORS
  In each case, μ, for example:
  uA... : μA..., uPA... : μPA...,
  uPB... : μPB..., uPC... : μPC...,
  uPD... : μPD...
- CAPACITORS
  uF : μF
- COILS
  uH : μH

Ref. No.	Part No.	Description			Remark
*	A-7083-958-A	AU-165 BOARD, COMPLETE (TR72/TR80/TR40R/TR450/TR750) (Ref. No. 10,000 Series)			
		< CAPACITOR >			
C1302	1-162-970-11	CERAMIC CHIP	0.01uF	10%	25V
C1303	1-164-004-11	CERAMIC CHIP	0.1uF	10%	25V
C1304	1-135-181-21	TANTALUM CHIP	4.7uF	20%	6.3V
C1305	1-164-004-11	CERAMIC CHIP	0.1uF	10%	25V
C1306	1-126-205-11	ELECT CHIP	47uF	20%	6.3V
C1307	1-126-205-11	ELECT CHIP	47uF	20%	6.3V
C1308	1-135-181-21	TANTALUM CHIP	4.7uF	20%	6.3V
C1309	1-126-205-11	ELECT CHIP	47uF	20%	6.3V
C1310	1-126-205-11	ELECT CHIP	47uF	20%	6.3V
C1311	1-126-205-11	ELECT CHIP	47uF	20%	6.3V
C1312	1-126-205-11	ELECT CHIP	47uF	20%	6.3V
C1313	1-162-959-11	CERAMIC CHIP	100PF	5%	50V
C1314	1-162-959-11	CERAMIC CHIP	100PF	5%	50V
C1315	1-126-208-11	ELECT	100uF	20%	4V
C1316	1-135-258-11	TANTAL. CHIP	10uF	20%	6.3V
C1318	1-164-004-11	CERAMIC CHIP	0.1uF	10%	25V
C1319	1-162-959-11	CERAMIC CHIP	100PF	5%	50V
C1321	1-135-181-21	TANTALUM CHIP	4.7uF	20%	6.3V
C1322	1-164-004-11	CERAMIC CHIP	0.1uF	10%	25V
C1326	1-135-181-21	TANTALUM CHIP	4.7uF	20%	6.3V
C1327	1-135-181-21	TANTALUM CHIP	4.7uF	20%	6.3V
C1328	1-135-091-21	TANTAL. CHIP	1uF	20%	16V
C1329	1-135-091-21	TANTAL. CHIP	1uF	20%	16V
C1330	1-135-259-11	TANTAL. CHIP	10uF	20%	6.3V
C1331	1-135-259-11	TANTAL. CHIP	10uF	20%	6.3V
C1332	1-135-181-21	TANTALUM CHIP	4.7uF	20%	6.3V
C1333	1-135-181-21	TANTALUM CHIP	4.7uF	20%	6.3V
C1334	1-162-966-11	CERAMIC CHIP	0.0022uF	10%	50V
C1335	1-162-966-11	CERAMIC CHIP	0.0022uF	10%	50V
C1336	1-135-148-21	TANTAL. CHIP	1.5uF	20%	10V
C1337	1-135-148-21	TANTAL. CHIP	1.5uF	20%	10V
C1338	1-162-966-11	CERAMIC CHIP	0.0022uF	10%	50V
C1339	1-162-966-11	CERAMIC CHIP	0.0022uF	10%	50V
C1340	1-162-966-11	CERAMIC CHIP	0.0022uF	10%	50V
C1341	1-162-966-11	CERAMIC CHIP	0.0022uF	10%	50V
C1343	1-164-004-11	CERAMIC CHIP	0.1uF	10%	25V
C1344	1-164-846-11	CERAMIC CHIP	1uF		16V
C1345	1-162-967-11	CERAMIC CHIP	0.0033uF	10%	50V
C1346	1-162-970-11	CERAMIC CHIP	0.01uF	10%	25V
C1347	1-162-970-11	CERAMIC CHIP	0.01uF	10%	25V
C1348	1-164-004-11	CERAMIC CHIP	0.1uF	10%	25V
C1349	1-162-970-11	CERAMIC CHIP	0.01uF	10%	25V
C1350	1-164-004-11	CERAMIC CHIP	0.1uF	10%	25V
C1352	1-164-004-11	CERAMIC CHIP	0.1uF	10%	25V
C1353	1-164-004-11	CERAMIC CHIP	0.1uF	10%	25V
C1355	1-164-004-11	CERAMIC CHIP	0.1uF	10%	25V
C1356	1-135-269-11	TANTAL. CHIP	10uF	20%	6.3V
C1357	1-135-269-11	TANTAL. CHIP	10uF	20%	6.3V
C1358	1-162-970-11	CERAMIC CHIP	0.01uF	10%	25V
C1359	1-162-970-11	CERAMIC CHIP	0.01uF	10%	25V
C1360	1-162-970-11	CERAMIC CHIP	0.01uF	10%	25V
C1361	1-162-970-11	CERAMIC CHIP	0.01uF	10%	25V
C1362	1-163-969-11	CERAMIC CHIP	0.0068uF	10%	25V
C1363	1-162-970-11	CERAMIC CHIP	0.01uF	10%	25V
C1364	1-162-970-11	CERAMIC CHIP	0.01uF	10%	25V
		< CONNECTOR >			
CN1321	1-691-490-21	CONNECTOR, FPC/FFC 11P			
* CN1358	1-691-833-11	CONNECTOR, BOARD TO BOARD 54P			
		< DIODE >			
D1302	8-719-404-46	DIODE	MA110		
D1303	8-719-045-87	DIODE	MA4ZD82WA-TX		
D1304	8-719-045-87	DIODE	MA4ZD82WA-TX		
		< FILTER >			
FL402	1-236-838-21	FILTER, BAND PASS (1.7MHz)			
FL1302	1-236-837-21	FILTER, BAND PASS (1.5MHz)			
		< IC >			
IC402	8-759-234-77	IC	TC4SHEF		
IC1301	8-759-159-94	IC	LA7491N-TEM		
		< TRANSISTOR >			
Q1301	8-729-230-68	TRANSISTOR	2SC4116-YG		
Q1302	8-729-230-68	TRANSISTOR	2SC4116-YG		
Q1304	8-729-403-85	TRANSISTOR	DTC114		
Q1305	8-729-230-68	TRANSISTOR	2SC4116-YG		
Q1306	8-729-230-68	TRANSISTOR	2SC4116-YG		

Ref. No.	Part No.	Description				Remark
Q1311	8-729-230-63	TRANSISTOR	2SC4116-YG			
Q1312	8-729-402-42	TRANSISTOR	UN5213			
Q1313	8-729-403-35	TRANSISTOR	UN5113			
Q1315	8-729-402-42	TRANSISTOR	UN5213			
Q1316	8-729-230-63	TRANSISTOR	2SC4116-YG			
Q1317	8-729-230-63	TRANSISTOR	2SC4116-YG			
Q1318	8-729-402-81	TRANSISTOR	XN4501			
Q1319	8-729-402-81	TRANSISTOR	XN4501			
Q1320	8-729-230-63	TRANSISTOR	2SC4116-YG			
Q1321	8-729-420-12	TRANSISTOR	XN4213			
Q1322	8-729-420-12	TRANSISTOR	XN4213			
		< RESISTOR >				
R1301	1-216-823-11	METAL CHIP	1.5K	5%	1/16W	
R1302	1-216-841-11	METAL CHIP	47K	5%	1/16W	
R1303	1-216-831-11	METAL CHIP	6.8K	5%	1/16W	
R1304	1-216-810-11	METAL CHIP	120	5%	1/16W	
R1305	1-216-810-11	METAL CHIP	120	5%	1/16W	
R1306	1-216-817-11	METAL CHIP	470	5%	1/16W	
R1307	1-216-817-11	METAL CHIP	470	5%	1/16W	
R1308	1-216-833-11	METAL CHIP	10K	5%	1/16W	
R1309	1-216-833-11	METAL CHIP	10K	5%	1/16W	
R1312	1-216-831-11	METAL CHIP	6.8K	5%	1/16W	
R1316	1-216-839-11	METAL CHIP	33K	5%	1/16W	
R1317	1-216-833-11	METAL CHIP	10K	5%	1/16W	
R1318	1-216-833-11	METAL CHIP	10K	5%	1/16W	
R1321	1-216-829-11	METAL CHIP	4.7K	5%	1/16W	
R1322	1-216-829-11	METAL CHIP	4.7K	5%	1/16W	
R1323	1-216-823-11	METAL CHIP	1.5K	5%	1/16W	
R1324	1-216-841-11	METAL CHIP	47K	5%	1/16W	
R1325	1-216-841-11	METAL CHIP	47K	5%	1/16W	
R1330	1-216-833-11	METAL CHIP	10K	5%	1/16W	
R1331	1-216-833-11	METAL CHIP	10K	5%	1/16W	
R1334	1-216-839-11	METAL CHIP	33K	5%	1/16W	
R1335	1-216-839-11	METAL CHIP	33K	5%	1/16W	
R1336	1-216-841-11	METAL CHIP	47K	5%	1/16W	
R1337	1-216-839-11	METAL CHIP	33K	5%	1/16W	
R1338	1-216-863-11	METAL GLAZE	3.3M	5%	1/16W	
R1340	1-216-833-11	METAL CHIP	10K	5%	1/16W	
R1341	1-216-863-11	METAL GLAZE	3.3M	5%	1/16W	
R1342	1-216-821-11	METAL CHIP	1K	5%	1/16W	
R1346	1-216-864-11	METAL CHIP	0	5%	1/16W	
R1347	1-216-864-11	METAL CHIP	0	5%	1/16W	
R1348	1-216-847-11	METAL CHIP	150K	5%	1/16W	
R1349	1-216-827-11	METAL CHIP	3.3K	5%	1/16W	
R1350	1-216-832-11	METAL CHIP	8.2K	5%	1/16W	
R1351	1-216-841-11	METAL CHIP	47K	5%	1/16W	
R1352	1-216-864-11	METAL CHIP	0	5%	1/16W	
R1353	1-216-817-11	METAL CHIP	470	5%	1/16W	
R1354	1-216-817-11	METAL CHIP	470	5%	1/16W	
R1355	1-216-833-11	METAL CHIP	10K	5%	1/16W	
R1356	1-216-833-11	METAL CHIP	10K	5%	1/16W	
R1357	1-216-827-11	METAL CHIP	3.3K	5%	1/16W	
R1358	1-216-825-11	METAL CHIP	2.2K	5%	1/16W	
R1359	1-216-826-11	METAL CHIP	2.7K	5%	1/16W	
R1360	1-216-827-11	METAL CHIP	3.3K	5%	1/16W	
R1361	1-216-836-11	METAL CHIP	18K	5%	1/16W	
R1362	1-216-837-11	METAL CHIP	22K	5%	1/16W	
R1363	1-216-825-11	METAL CHIP	2.2K	5%	1/16W	
R1364	1-216-826-11	METAL CHIP	2.7K	5%	1/16W	
R1365	1-216-821-11	METAL CHIP	1K	5%	1/16W	
R1366	1-216-821-11	METAL CHIP	1K	5%	1/16W	
R1367	1-216-821-11	METAL CHIP	1K	5%	1/16W	
R1368	1-216-821-11	METAL CHIP	1K	5%	1/16W	
R1369	1-216-825-11	METAL CHIP	2.2K	5%	1/16W	
R1370	1-216-837-11	METAL CHIP	22K	5%	1/16W	
R1371	1-216-836-11	METAL CHIP	18K	5%	1/16W	
R1372	1-216-837-11	METAL CHIP	22K	5%	1/16W	
R1373	1-216-841-11	METAL CHIP	47K	5%	1/16W	
R1375	1-216-829-11	METAL CHIP	4.7K	5%	1/16W	
R1376	1-216-841-11	METAL CHIP	47K	5%	1/16W	
R1381	1-216-864-11	METAL CHIP	0	5%	1/16W	

****

* A-7063-952-A AU-169 BOARD, COMPLETE
****
(TR42/TR70/TR82/TR550)
(Ref. No. 5,000 Series)

< CAPACITOR >

C402	1-165-176-11	CERAMIC CHIP	0.047uF	10%	16V
C403	1-164-004-11	CERAMIC CHIP	0.1uF	10%	25V
C404	1-164-004-11	CERAMIC CHIP	0.1uF	10%	25V
C405	1-164-677-11	CERAMIC CHIP	0.033uF	10%	16V
C407	1-162-957-11	CERAMIC CHIP	220PF	5%	50V
C408	1-164-232-11	CERAMIC CHIP	0.01uF		50V
C409	1-162-970-11	CERAMIC CHIP	0.01uF	10%	25V
C411	1-126-205-11	ELECT CHIP	47uF	20%	6.3V
C412	1-126-205-11	ELECT CHIP	47uF	20%	6.3V
C413	1-126-209-11	ELECT	100uF	20%	4V
C414	1-128-006-11	ELECT CHIP	4.7uF	20%	25V
C415	1-128-004-11	ELECT CHIP	10uF	20%	16V
C416	1-162-951-11	CERAMIC CHIP	68PF	5%	50V
C418	1-164-004-11	CERAMIC CHIP	0.1uF	10%	25V
C419	1-162-967-11	CERAMIC CHIP	0.0033uF	10%	50V
C421	1-162-974-11	CERAMIC CHIP	0.01uF		50V
C422	1-164-674-11	CERAMIC CHIP	1800PF	5%	16V
C423	1-164-471-11	CERAMIC CHIP	680PF	5%	50V
C424	1-162-949-11	CERAMIC CHIP	47PF	5%	50V
C425	1-164-346-11	CERAMIC CHIP	1uF		16V

Ref. No.	Part No.	Description				Remark
Q1311	8-729-230-63	TRANSISTOR	2SC4116-YG			
Q1312	8-729-402-42	TRANSISTOR	UN5213			
Q1313	8-729-403-35	TRANSISTOR	UN5113			
Q1315	8-729-402-42	TRANSISTOR	UN5213			
Q1316	8-729-230-63	TRANSISTOR	2SC4116-YG			
Q1317	8-729-230-63	TRANSISTOR	2SC4116-YG			
Q1318	8-729-403-81	TRANSISTOR	XN4501			
Q1319	8-729-403-81	TRANSISTOR	XN4501			
Q1320	8-729-230-63	TRANSISTOR	2SC4116-YG			
Q1321	8-729-420-13	TRANSISTOR	XN4213			
Q1322	8-729-420-13	TRANSISTOR	XN4213			
		< RESISTOR >				
R1301	1-216-823-11	METAL CHIP	1.5K	5%	1/16W	
R1302	1-216-841-11	METAL CHIP	47K	5%	1/16W	
R1303	1-216-831-11	METAL CHIP	6.8K	5%	1/16W	
R1304	1-216-810-11	METAL CHIP	120	5%	1/16W	
R1305	1-216-810-11	METAL CHIP	120	5%	1/16W	
R1306	1-216-817-11	METAL CHIP	470	5%	1/16W	
R1307	1-216-817-11	METAL CHIP	470	5%	1/16W	
R1308	1-216-833-11	METAL CHIP	10K	5%	1/16W	
R1309	1-216-833-11	METAL CHIP	10K	5%	1/16W	
R1312	1-216-831-11	METAL CHIP	6.8K	5%	1/16W	
R1316	1-216-839-11	METAL CHIP	33K	5%	1/16W	
R1317	1-216-833-11	METAL CHIP	10K	5%	1/16W	
R1318	1-216-833-11	METAL CHIP	10K	5%	1/16W	
R1321	1-216-829-11	METAL CHIP	4.7K	5%	1/16W	
R1322	1-216-829-11	METAL CHIP	4.7K	5%	1/16W	
R1323	1-216-823-11	METAL CHIP	1.5K	5%	1/16W	
R1324	1-216-841-11	METAL CHIP	47K	5%	1/16W	
R1325	1-216-841-11	METAL CHIP	47K	5%	1/16W	
R1330	1-216-833-11	METAL CHIP	10K	5%	1/16W	
R1331	1-216-833-11	METAL CHIP	10K	5%	1/16W	
R1334	1-216-839-11	METAL CHIP	33K	5%	1/16W	
R1335	1-216-839-11	METAL CHIP	33K	5%	1/16W	
R1336	1-216-841-11	METAL CHIP	47K	5%	1/16W	
R1337	1-216-839-11	METAL CHIP	33K	5%	1/16W	
R1338	1-216-853-11	METAL GLAZE	3.3M	5%	1/16W	
R1340	1-216-833-11	METAL CHIP	10K	5%	1/16W	
R1341	1-216-853-11	METAL GLAZE	3.3M	5%	1/16W	
R1342	1-216-821-11	METAL CHIP	1K	5%	1/16W	
R1346	1-216-864-11	METAL CHIP	0	5%	1/16W	
R1347	1-216-864-11	METAL CHIP	0	5%	1/16W	
R1348	1-216-847-11	METAL CHIP	150K	5%	1/16W	
R1349	1-216-827-11	METAL CHIP	3.3K	5%	1/16W	
R1350	1-216-832-11	METAL CHIP	8.2K	5%	1/16W	
R1351	1-216-841-11	METAL CHIP	47K	5%	1/16W	
R1352	1-216-864-11	METAL CHIP	0	5%	1/16W	
R1353	1-216-817-11	METAL CHIP	470	5%	1/16W	
R1354	1-216-817-11	METAL CHIP	470	5%	1/16W	
R1355	1-216-833-11	METAL CHIP	10K	5%	1/16W	
R1356	1-216-833-11	METAL CHIP	10K	5%	1/16W	
R1357	1-216-827-11	METAL CHIP	3.3K	5%	1/16W	
R1358	1-216-825-11	METAL CHIP	2.2K	5%	1/16W	
R1359	1-216-826-11	METAL CHIP	2.7K	5%	1/16W	
R1360	1-216-827-11	METAL CHIP	3.3K	5%	1/16W	
R1361	1-216-836-11	METAL CHIP	18K	5%	1/16W	
R1362	1-216-837-11	METAL CHIP	22K	5%	1/16W	
R1363	1-216-825-11	METAL CHIP	2.2K	5%	1/16W	
R1364	1-216-826-11	METAL CHIP	2.7K	5%	1/16W	
R1365	1-216-821-11	METAL CHIP	1K	5%	1/16W	
R1366	1-216-821-11	METAL CHIP	1K	5%	1/16W	
R1367	1-216-821-11	METAL CHIP	1K	5%	1/16W	
R1368	1-216-821-11	METAL CHIP	1K	5%	1/16W	
R1369	1-216-825-11	METAL CHIP	2.2K	5%	1/16W	
R1370	1-216-837-11	METAL CHIP	22K	5%	1/16W	
R1371	1-216-836-11	METAL CHIP	18K	5%	1/16W	
R1372	1-216-837-11	METAL CHIP	22K	5%	1/16W	
R1373	1-216-841-11	METAL CHIP	47K	5%	1/16W	
R1375	1-216-829-11	METAL CHIP	4.7K	5%	1/16W	
R1376	1-216-841-11	METAL CHIP	47K	5%	1/16W	
R1381	1-216-864-11	METAL CHIP	0	5%	1/16W	

****

* A-7063-962-A AU-169 BOARD, COMPLETE

(TR42/TR70/TR82/TR550)
(Ref. No. 5,000 Series)

Ref. No.	Part No.	Description				Remark
		< CAPACITOR >				
C402	1-165-176-11	CERAMIC CHIP	0.047uF	10%	16V	
C403	1-164-004-11	CERAMIC CHIP	0.1uF	10%	25V	
C404	1-164-004-11	CERAMIC CHIP	0.1uF	10%	25V	
C405	1-164-677-11	CERAMIC CHIP	0.033uF	10%	16V	
C407	1-162-957-11	CERAMIC CHIP	220PF	5%	50V	
C408	1-164-232-11	CERAMIC CHIP	0.01uF		50V	
C409	1-162-970-11	CERAMIC CHIP	0.01uF	10%	25V	
C411	1-126-205-11	ELECT CHIP	47uF	20%	6.3V	
C412	1-126-206-11	ELECT CHIP	47uF	20%	6.3V	
C413	1-126-209-11	ELECT	100uF	20%	4V	
C414	1-128-006-11	ELECT CHIP	4.7uF	20%	25V	
C415	1-128-004-11	ELECT CHIP	10uF	20%	16V	
C416	1-162-961-11	CERAMIC CHIP	68PF	5%	50V	
C418	1-164-004-11	CERAMIC CHIP	0.1uF	10%	25V	
C419	1-163-067-11	CERAMIC CHIP	0.0033uF	10%	50V	
C421	1-162-974-11	CERAMIC CHIP	0.01uF		50V	
C422	1-164-674-11	CERAMIC CHIP	1800PF	5%	16V	
C423	1-164-471-11	CERAMIC CHIP	680PF	5%	50V	
C424	1-162-949-11	CERAMIC CHIP	47PF	5%	50V	
C425	1-164-346-11	CERAMIC CHIP	1uF		16V	

Ref. No.	Part No.	Description			Remark
C426	1-162-957-11	CERAMIC CHIP	220PF	5%	50V
C428	1-128-006-11	ELECT CHIP	4.7uF	20%	25V
C429	1-128-013-11	ELECT CHIP	1uF	20%	50V
C430	1-128-004-11	ELECT CHIP	10uF	20%	16V
C431	1-162-969-11	CERAMIC CHIP	0.0068uF	10%	25V
C432	1-164-674-11	CERAMIC CHIP	1800PF	5%	16V
C433	1-164-346-11	CERAMIC CHIP	1uF		16V
C434	1-128-003-11	ELECT CHIP	22uF	20%	4V
C435	1-162-966-11	CERAMIC CHIP	0.0022uF	10%	50V
C436	1-126-205-11	ELECT CHIP	47uF	20%	6.3V
C437	1-126-205-11	ELECT CHIP	47uF	20%	6.3V
C438	1-164-004-11	CERAMIC CHIP	0.1uF	10%	25V
C439	1-128-004-11	ELECT CHIP	10uF	20%	16V
C440	1-162-974-11	CERAMIC CHIP	0.01uF		50V
C441	1-126-205-11	ELECT CHIP	47uF	20%	6.3V
C442	1-162-974-11	CERAMIC CHIP	0.01uF		50V
		< CONNECTOR >			
CN401	1-691-516-11	CONNECTOR, BOARD TO BOARD 24P			
CN402	1-691-487-21	CONNECTOR, FFC/FPC 8P			
		< DIODE >			
D402	8-719-045-87	DIODE MA4Z082WA-TX			
		< IC >			
IC401	8-759-823-19	IC CXA1488RR			
		< COIL >			
L401	1-412-954-11	INDUCTOR 18uH			
		< TRANSISTOR >			
Q402	8-729-230-63	TRANSISTOR 2SC4116			
Q403	8-729-230-63	TRANSISTOR 2SC4116			
Q404	8-729-402-81	TRANSISTOR XN4501			
Q405	8-729-402-42	TRANSISTOR UN5213			
Q406	8-729-403-35	TRANSISTOR UN5113			
		< RESISTOR >			
R401	1-216-849-11	METAL CHIP	220K	5%	1/16W
R402	1-216-864-11	METAL CHIP	0	5%	1/16W
R403	1-216-859-11	METAL GLAZE	1.5M	5%	1/16W
R404	1-216-851-11	METAL CHIP	330K	5%	1/16W
R407	1-216-837-11	METAL CHIP	22K	5%	1/16W
R409	1-216-833-11	METAL CHIP	10K	5%	1/16W
R410	1-216-840-11	METAL CHIP	39K	5%	1/16W
R411	1-216-833-11	METAL CHIP	10K	5%	1/16W
R412	1-216-821-11	METAL CHIP	1K	5%	1/16W
R413	1-216-835-11	METAL CHIP	15K	5%	1/16W
R415	1-216-849-11	METAL CHIP	220K	5%	1/16W
R416	1-216-829-11	METAL CHIP	4.7K	5%	1/16W
R417	1-216-829-11	METAL CHIP	4.7K	5%	1/16W
R418	1-216-851-11	METAL CHIP	330K	5%	1/16W
R419	1-216-829-11	METAL CHIP	4.7K	5%	1/16W
R420	1-216-832-11	METAL CHIP	8.2K	5%	1/16W
R421	1-216-864-11	METAL CHIP	0	5%	1/16W
R423	1-216-839-11	METAL CHIP	33K	5%	1/16W
R424	1-216-833-11	METAL CHIP	10K	5%	1/16W
R425	1-216-810-11	METAL CHIP	120	5%	1/16W
R427	1-216-817-11	METAL CHIP	470	5%	1/16W
R428	1-216-833-11	METAL CHIP	10K	5%	1/16W
R429	1-216-827-11	METAL CHIP	3.3K	5%	1/16W
R430	1-216-841-11	METAL CHIP	47K	5%	1/16W
R431	1-216-823-11	METAL CHIP	1.5K	5%	1/16W
R432	1-216-825-11	METAL CHIP	2.2K	5%	1/16W
R433	1-216-817-11	METAL CHIP	470	5%	1/16W
R434	1-216-821-11	METAL CHIP	1K	5%	1/16W
R435	1-216-836-11	METAL CHIP	18K	5%	1/16W
R436	1-216-837-11	METAL CHIP	22K	5%	1/16W

****

* A-7063-960-A DD-60 BOARD, COMPLETE
****
(TR72/TR400/TR430/TR750)

* A-7066-009-A DD-60 BOARD, COMPLETE (TR80)
****

* A-7063-954-A DD-66 BOARD, COMPLETE (TR42/TR82/TR550)
****

* A-7066-006-A DD-66 BOARD, COMPLETE (TR70)
****
(Ref. No. 9,000 Series)

< CAPACITOR >

C901	1-163-989-11	CERAMIC CHIP	0.033uF	10%	25V
C902	1-164-004-11	CERAMIC CHIP	0.1uF	10%	25V
C903	1-163-121-00	CERAMIC CHIP	150PF	5%	50V
C904	1-163-121-00	CERAMIC CHIP	150PF	5%	50V
C906	1-164-245-11	CERAMIC CHIP	0.015uF	10%	25V
C907	1-162-963-11	CERAMIC CHIP	680PF	10%	50V
C908	1-162-963-11	CERAMIC CHIP	680PF	10%	50V
C909	1-162-963-11	CERAMIC CHIP	680PF	10%	50V
C910	1-162-964-11	CERAMIC CHIP	0.001uF	10%	50V
C911	1-162-963-11	CERAMIC CHIP	680PF	10%	50V
C912	1-128-530-11	ELECT CHIP	33uF	20%	10V
C913	1-128-004-11	ELECT CHIP	10uF	20%	16V
C914	1-128-004-11	ELECT CHIP	10uF	20%	16V
C915	1-165-178-11	CERAMIC CHIP	6.8uF		16V
C916	1-128-004-11	ELECT CHIP	10uF	20%	16V
C917	1-165-178-11	CERAMIC CHIP	6.8uF		16V

Ref. No.	Part No.	Description			Remark
C428	1-162-957-11	CERAMIC CHIP	22PF	5%	50V
C429	1-126-009-11	ELECT CHIP	4.7uF	20%	25V
C429	1-126-018-11	ELECT CHIP	1uF	20%	50V
C430	1-123-004-11	ELECT CHIP	10uF	20%	16V
C431	1-162-969-11	CERAMIC CHIP	0.0068uF	10%	25V
C432	1-164-674-11	CERAMIC CHIP	1800PF	5%	16V
C433	1-164-346-11	CERAMIC CHIP	1uF		16V
C434	1-123-003-11	ELECT CHIP	22uF	20%	4V
C435	1-163-968-11	CERAMIC CHIP	0.0022uF	10%	50V
C436	1-126-205-11	ELECT CHIP	47uF	20%	6.3V
C437	1-126-206-11	ELECT CHIP	47uF	20%	6.3V
C438	1-164-004-11	CERAMIC CHIP	0.1uF	10%	25V
C439	1-123-004-11	ELECT CHIP	10uF	20%	16V
C440	1-162-974-11	CERAMIC CHIP	0.01uF		50V
C441	1-126-205-11	ELECT CHIP	47uF	20%	6.3V
C442	1-162-974-11	CERAMIC CHIP	0.01uF		50V
		< CONNECTOR >			
CN401	1-691-516-11	CONNECTOR, BOARD TO BOARD 24P			
CN402	1-691-487-21	CONNECTOR, FPC/FFC 8P			
		< DIODE >			
D402	8-719-045-87	DIODE MA4200SWA-TX			
		< IC >			
IC401	8-759-833-19	IC CXA1438BR			
		< COIL >			
L401	1-412-064-11	INDUCTOR 12uH			
		< TRANSISTOR >			
Q402	8-729-230-63	TRANSISTOR 2SC4118			
Q403	8-729-230-63	TRANSISTOR 2SC4118			
Q404	8-729-403-81	TRANSISTOR XN4521			
Q405	8-729-402-42	TRANSISTOR UN5211			
Q406	8-729-403-35	TRANSISTOR UN5113			
		< RESISTOR >			
R401	1-216-849-11	METAL CHIP	220K	5%	1/16W
R402	1-216-864-11	METAL CHIP	0	5%	1/16W
R403	1-216-859-11	METAL GLAZE	1.5M	5%	1/16W
R404	1-216-851-11	METAL CHIP	330K	5%	1/16W
R407	1-216-837-11	METAL CHIP	22K	5%	1/16W
R409	1-216-833-11	METAL CHIP	10K	5%	1/16W
R410	1-216-840-11	METAL CHIP	39K	5%	1/16W
R411	1-216-833-11	METAL CHIP	10K	5%	1/16W
R412	1-216-821-11	METAL CHIP	1K	5%	1/16W
R413	1-216-835-11	METAL CHIP	15K	5%	1/16W
R415	1-216-849-11	METAL CHIP	220K	5%	1/16W
R416	1-216-829-11	METAL CHIP	4.7K	5%	1/16W
R417	1-216-829-11	METAL CHIP	4.7K	5%	1/16W
R418	1-216-851-11	METAL CHIP	330K	5%	1/16W
R419	1-216-829-11	METAL CHIP	4.7K	5%	1/16W
R420	1-216-833-11	METAL CHIP	8.2K	5%	1/16W
R421	1-216-864-11	METAL CHIP	0	5%	1/16W
R423	1-216-838-11	METAL CHIP	22K	5%	1/16W
R424	1-216-833-11	METAL CHIP	10K	5%	1/16W
R425	1-216-810-11	METAL CHIP	180	5%	1/16W
R427	1-216-817-11	METAL CHIP	470	5%	1/16W
R428	1-216-835-11	METAL CHIP	15K	5%	1/16W
R429	1-216-837-11	METAL CHIP	2.2K	5%	1/16W
R430	1-216-841-11	METAL CHIP	47K	5%	1/16W
R431	1-216-825-11	METAL CHIP	1.5K	5%	1/16W
R432	1-216-825-11	METAL CHIP	1.5K	5%	1/16W
R433	1-216-817-11	METAL CHIP	470	5%	1/16W
R434	1-216-821-11	METAL CHIP	1K	5%	1/16W
R435	1-216-835-11	METAL CHIP	15K	5%	1/16W
R436	1-216-837-11	METAL CHIP	22K	5%	1/16W

++

*	A-7068-980-A	DD-60 BOARD, COMPLETE	
		**********	
			(TR72/TR400/TR430/TR760)
*	A-7068-009-A	DD-60 BOARD, COMPLETE (TR80)	
		**********	
*	A-7068-964-A	DD-60 BOARD, COMPLETE (TR42/TR82/TR660)	
		**********	
*	A-7066-006-A	DD-66 BOARD, COMPLETE (TR70)	
		**********	
			(Ref. No. 9,000 Series)

< CAPACITOR >

C901	1-163-989-11	CERAMIC CHIP	0.033uF	10%	25V
C902	1-164-004-11	CERAMIC CHIP	0.1uF	10%	25V
C903	1-163-121-00	CERAMIC CHIP	150PF	5%	50V
C904	1-163-121-00	CERAMIC CHIP	150PF	5%	50V
C905	1-164-245-11	CERAMIC CHIP	0.015uF	10%	25V
C907	1-162-963-11	CERAMIC CHIP	680PF	10%	50V
C908	1-162-963-11	CERAMIC CHIP	680PF	10%	50V
C909	1-162-963-11	CERAMIC CHIP	680PF	10%	50V
C910	1-162-964-11	CERAMIC CHIP	0.001uF	10%	50V
C911	1-162-963-11	CERAMIC CHIP	680PF	10%	50V
C912	1-123-830-11	ELECT CHIP	33uF	20%	10V
C913	1-123-004-11	ELECT CHIP	10uF	20%	16V
C914	1-123-004-11	ELECT CHIP	10uF	20%	16V
C915	1-165-178-11	CERAMIC CHIP	6.8uF		16V
C916	1-123-004-11	ELECT CHIP	10uF	20%	16V
C917	1-165-178-11	CERAMIC CHIP	6.8uF		16V

Ref. No.	Part No.	Description			Remark
C918	1-165-178-11	CERAMIC CHIP	6.8uF		16V
C920	1-165-178-11	CERAMIC CHIP	6.8uF		16V
C921	1-165-178-11	CERAMIC CHIP	6.8uF		16V
C923	1-165-178-11	CERAMIC CHIP	6.8uF		16V
C924	1-165-178-11	CERAMIC CHIP	6.8uF		16V
C925	1-164-337-11	CERAMIC CHIP	2.2uF		16V
C926	1-164-337-11	CERAMIC CHIP	2.2uF		16V
C927	1-165-178-11	CERAMIC CHIP	6.8uF		16V
C928	1-165-178-11	CERAMIC CHIP	6.8uF		16V
C929	1-135-216-11	TANTALUM CHIP	10uF	20%	10V
C930	1-107-418-11	ELECT CHIP	10uF	20%	35V
C931	1-128-004-11	ELECT CHIP	10uF	20%	16V
C932	1-128-004-11	ELECT CHIP	10uF	20%	16V
C934	1-128-004-11	ELECT CHIP	10uF	20%	16V
C935	1-128-004-11	ELECT CHIP	10uF	20%	16V
C936	1-128-004-11	ELECT CHIP	10uF	20%	16V
C937	1-128-004-11	ELECT CHIP	10uF	20%	16V
C938	1-128-004-11	ELECT CHIP	10uF	20%	16V
C939	1-163-023-00	CERAMIC CHIP	0.015uF	5%	50V
C940	1-163-023-00	CERAMIC CHIP	0.015uF	5%	50V
C941	1-163-019-00	CERAMIC CHIP	0.0068uF	10%	50V
C942	1-163-009-11	CERAMIC CHIP	0.001uF	10%	50V
C943	1-163-019-00	CERAMIC CHIP	0.0068uF	10%	50V
C944	1-164-161-11	CERAMIC CHIP	0.0022uF	10%	100V
C945	1-128-530-11	ELECT CHIP	33uF	20%	10V
C950	1-128-004-11	ELECT CHIP	10uF	20%	16V

< CONNECTOR >

CN901	1-695-324-11	CONNECTOR, BOARD TO BOARD 42P

< DIODE >

D900	8-719-045-87	DIODE MA4Z082WA
D901	8-719-027-77	DIODE MA796
D902	8-719-045-87	DIODE MA4Z082WA (TR72/TR80/TR400/TR430/TR750)
D909	8-719-404-49	DIODE MA111
D910	8-719-404-49	DIODE MA111

< FUSE >

⚠F450	1-576-213-11	FUSE, CHIP (1.6A 125V)
⚠F451	1-576-213-11	FUSE, CHIP (1.6A 125V)
⚠F452	1-576-213-11	FUSE, CHIP (1.6A 125V)

< IC >

IC901	8-759-249-14	IC MB3799-02PFV-GBND-ER

< JACK >

J901	1-537-281-41	TERMINAL BOARD (BATTERY)
J902	1-565-276-21	JACK, ULTRA SMALL 1P (REMOTE)
J903	1-568-027-11	JACK, SMALL TYPE 1P (EARPHONE) (TR42/TR70/TR82/TR550)
J903	1-569-809-11	JACK (SMALL TYPE) (HEADPHONES) (TR72/TR80/TR400/TR430/TR750)

< COIL >

L901	1-424-653-11	COIL, CHOKE 10uH
L902	1-424-653-11	COIL, CHOKE 10uH
L903	1-424-653-11	COIL, CHOKE 10uH
L904	1-409-556-11	COIL, CHOKE 47uH
L905	1-424-674-11	COIL, CHOKE 22uH
L906	1-409-556-11	COIL, CHOKE 47uH
L907	1-424-674-11	COIL, CHOKE 22uH
L908	1-424-674-11	COIL, CHOKE 22uH
L909	1-412-056-11	INDUCTOR CHIP 4.7uH
L910	1-412-056-11	INDUCTOR CHIP 4.7uH
L911	1-412-056-11	INDUCTOR CHIP 4.7uH
L912	1-412-056-11	INDUCTOR CHIP 4.7uH
L913	1-412-056-11	INDUCTOR CHIP 4.7uH
L914	1-412-064-11	INDUCTOR CHIP 100uH
L915	1-412-064-11	INDUCTOR CHIP 100uH
L916	1-412-056-11	INDUCTOR CHIP 4.7uH
L917	1-412-056-11	INDUCTOR CHIP 4.7uH

< TRANSISTOR >

Q900	8-729-421-90	TRANSISTOR XN4113 (TR70/TR80)
Q901	8-729-420-12	TRANSISTOR XN4213
Q902	8-729-804-41	TRANSISTOR 2SB1122
Q903	8-729-823-82	TRANSISTOR FP101
Q904	8-729-823-84	TRANSISTOR FP102
Q905	8-729-823-82	TRANSISTOR FP101
Q906	8-729-823-82	TRANSISTOR FP101
Q907	8-729-823-82	TRANSISTOR FP101
Q908	8-729-420-12	TRANSISTOR XN4213 (TR70/TR80)
Q909	8-729-805-25	TRANSISTOR 2SB1121
Q910	8-729-429-32	TRANSISTOR UN9210-QRS (TR70/TR80)
Q911	8-729-402-42	TRANSISTOR UN5213
Q912	8-729-420-24	TRANSISTOR 2SB1218A
Q914	8-729-402-42	TRANSISTOR UN5213
Q915	8-729-402-42	TRANSISTOR UN5213

< RESISTOR >

R901	1-218-872-11	METAL CHIP	11K	0.50%	1/16W
R902	1-216-833-11	METAL CHIP	10K	5%	1/16W
R903	1-216-827-11	METAL CHIP	3.3K	5%	1/16W
R904	1-216-827-11	METAL CHIP	3.3K	5%	1/16W
R905	1-216-836-11	METAL CHIP	18K	5%	1/16W
R906	1-216-827-11	METAL CHIP	3.3K	5%	1/16W
R907	1-216-035-00	METAL CHIP	270	5%	1/10W
R908	1-216-834-11	METAL CHIP	12K	5%	1/16W
R909	1-216-031-00	METAL CHIP	180	5%	1/10W

The components identified by mark ⚠ or dotted line with mark ⚠ are critical for safety. Replace only with part number specified.	Les composants identifiés par une marque ⚠ sont critiques pour la sécurité. Ne les remplacer que par une piéce portant le numéro spécifié.

Ref. No.	Part No.	Description			Remark
C818	1-165-178-11	CERAMIC CHIP	6.8pF		16V
C820	1-165-178-11	CERAMIC CHIP	6.8pF		16V
C821	1-165-178-11	CERAMIC CHIP	6.8pF		16V
C823	1-165-178-11	CERAMIC CHIP	6.8pF		16V
C824	1-165-178-11	CERAMIC CHIP	6.8pF		16V
C825	1-164-837-11	CERAMIC CHIP	2.2pF		16V
C826	1-164-837-11	CERAMIC CHIP	2.2pF		16V
C827	1-165-178-11	CERAMIC CHIP	6.8pF		16V
C828	1-165-178-11	CERAMIC CHIP	6.8pF		16V
C829	1-135-216-11	TANTALUM CHIP	10uF	20%	10V
C830	1-107-418-11	ELECT CHIP	10uF	20%	35V
C831	1-128-004-11	ELECT CHIP	10uF	20%	16V
C832	1-128-004-11	ELECT CHIP	10uF	20%	16V
C834	1-128-004-11	ELECT CHIP	10uF	20%	16V
C835	1-128-004-11	ELECT CHIP	10uF	20%	16V
C836	1-128-004-11	ELECT CHIP	10uF	20%	16V
C837	1-128-004-11	ELECT CHIP	10uF	20%	16V
C838	1-128-004-11	ELECT CHIP	10uF	20%	16V
C839	1-163-023-00	CERAMIC CHIP	0.015uF	5%	50V
C840	1-163-023-00	CERAMIC CHIP	0.015uF	5%	50V
C841	1-163-019-00	CERAMIC CHIP	0.0068uF	10%	50V
C842	1-163-009-11	CERAMIC CHIP	0.001uF	10%	50V
C843	1-163-019-00	CERAMIC CHIP	0.0068uF	10%	50V
C844	1-164-161-11	CERAMIC CHIP	0.022uF	10%	100V
C845	1-128-530-11	ELECT CHIP	33uF	20%	10V
C850	1-128-004-11	ELECT CHIP	10uF	20%	16V
		< CONNECTOR >			
CN801	1-696-324-11	CONNECTOR, BOARD TO BOARD 42P			
		< DIODE >			
D800	8-719-045-87	DIODE	MA4ZD82WA		
D801	8-719-027-77	DIODE	MA796		
D802	8-719-045-87	DIODE	MA4ZD82WA		
					(TR72/TR80/TR400/TR430/TR750)
D809	8-719-404-49	DIODE	MA111		
D810	8-719-404-49	DIODE	MA111		
		< FUSE >			
⚠F450	1-576-213-11	FUSE, CHIP (1.6A 125V)			
⚠F451	1-576-213-11	FUSE, CHIP (1.6A 125V)			
⚠F453	1-576-213-11	FUSE, CHIP (1.6A 125V)			
		< IC >			
IC901	8-759-249-14	IC	MB3789-02PFV-GEND-ER		
		< JACK >			
J801	1-537-881-41	TERMINAL BOARD (BATTERY)			
J802	1-565-878-21	JACK, ULTRA SMALL 1P (REMOTE)			

Ref. No.	Part No.	Description			Remark
J803	1-566-027-11	JACK, SMALL TYPE 1P (HEADPHONE)			
					(TR43/TR70/TR82/TR550)
J903	1-569-809-11	JACK (SMALL TYPE) (HEADPHONES)			
					(TR72/TR80/TR400/TR430/TR750)
		< COIL >			
L801	1-424-653-11	COIL, CHOKE 10uH			
L802	1-424-653-11	COIL, CHOKE 10uH			
L803	1-424-653-11	COIL, CHOKE 10uH			
L804	1-409-558-11	COIL, CHOKE 47uH			
L805	1-424-874-11	COIL, CHOKE 22uH			
L806	1-409-558-11	COIL, CHOKE 47uH			
L807	1-424-874-11	COIL, CHOKE 22uH			
L808	1-424-874-11	COIL, CHOKE 22uH			
L808	1-412-058-11	INDUCTOR CHIP 4.7uH			
L810	1-412-058-11	INDUCTOR CHIP 4.7uH			
L811	1-412-058-11	INDUCTOR CHIP 4.7uH			
L812	1-412-058-11	INDUCTOR CHIP 4.7uH			
L813	1-412-059-11	INDUCTOR CHIP 4.7uH			
L814	1-412-064-11	INDUCTOR CHIP 100uH			
L815	1-412-064-11	INDUCTOR CHIP 100uH			
L816	1-412-058-11	INDUCTOR CHIP 4.7uH			
L817	1-412-058-11	INDUCTOR CHIP 4.7uH			
		< TRANSISTOR >			
Q800	8-729-421-90	TRANSISTOR	XN4113		(TR70/TR80)
Q801	8-729-420-12	TRANSISTOR	XN4113		
Q802	8-729-804-41	TRANSISTOR	2SB1132		
Q803	8-729-823-82	TRANSISTOR	FP101		
Q804	8-729-823-84	TRANSISTOR	FP102		
Q805	8-729-823-82	TRANSISTOR	FP101		
Q806	8-729-823-82	TRANSISTOR	FP101		
Q807	8-729-823-82	TRANSISTOR	FP101		
Q808	8-729-420-12	TRANSISTOR	XN4113		(TR70/TR80)
Q809	8-729-605-25	TRANSISTOR	2SB1121		
Q810	8-729-439-52	TRANSISTOR	HN9210-QRS		(TR70/TR80)
Q811	8-729-402-42	TRANSISTOR	UN5213		
Q812	8-729-420-24	TRANSISTOR	2SB1218A		
Q814	8-729-402-43	TRANSISTOR	UN5213		
Q815	8-729-402-43	TRANSISTOR	UN5213		
		< RESISTOR >			
R801	1-216-872-11	METAL CHIP	11K	0.50%	1/16W
R802	1-216-833-11	METAL CHIP	10K	5%	1/16W
R803	1-216-837-11	METAL CHIP	3.3K	5%	1/16W
R804	1-216-837-11	METAL CHIP	3.3K	5%	1/16W
R805	1-216-838-11	METAL CHIP	18K	5%	1/16W
R806	1-216-827-11	METAL CHIP	8.2K	5%	1/16W
R807	1-216-035-00	METAL CHIP	270	5%	1/10W
R808	1-216-834-11	METAL CHIP	12K	5%	1/16W
R809	1-216-031-00	METAL CHIP	180	5%	1/10W

The components identified by mark ⚠ or dotted line with mark ⚠ are critical for safety. Replace only with part number specified.	Les composants identifiés par une marque ⚠ sont critiques pour la sécurité. Ne les remplacer que par une pièce portant le numéro spécifié.

Ref. No.	Part No.	Description				Remark
R910	1-216-029-00	METAL CHIP	150	5%	1/10W	
R911	1-216-029-00	METAL CHIP	150	5%	1/10W	
R912	1-216-029-00	METAL CHIP	150	5%	1/10W	
R913	1-216-041-00	METAL CHIP	470	5%	1/10W	
R915	1-216-864-11	METAL CHIP	0	5%	1/16W	
R918	1-216-819-11	METAL CHIP	680	5%	1/16W	
R919	1-216-836-11	METAL CHIP	18K	5%	1/16W	
R920	1-216-841-11	METAL CHIP	47K	5%	1/16W	
R921	1-412-052-21	INDUCTOR CHIP 1uH				
R922	1-216-833-11	METAL CHIP	10K	5%	1/16W	
R923	1-412-052-21	INDUCTOR CHIP 1uH				
R924	1-412-979-21	INDUCTOR 1uH				
R925	1-216-825-11	METAL CHIP	2.2K	5%	1/16W	
R926	1-216-841-11	METAL CHIP	47K	5%	1/16W	
R931	1-216-864-11	METAL CHIP	0	5%	1/16W	
R932	1-412-979-21	INDUCTOR 1uH				
R933	1-412-979-21	INDUCTOR 1uH				(TR72/TR80/TR400/TR430/TR750)
R934	1-216-864-11	METAL CHIP	0	5%	1/16W	
R936	1-412-979-21	INDUCTOR	1uH			
R937	1-216-864-11	METAL CHIP	0	5%	1/16W	(TR42/TR72/TR82/TR400/TR430/TR550/TR750)
R938	1-216-864-11	METAL CHIP	0	5%	1/16W	(TR42/TR72/TR82/TR400/TR430/TR550/TR750)
R939	1-216-864-11	METAL CHIP	0	5%	1/16W	(TR70/TR80)
R940	1-216-864-11	METAL CHIP	0	5%	1/16W	(TR42/TR72/TR82/TR400/TR430/TR550/TR750)
R941	1-218-849-11	METAL CHIP	1.2K	0.50%	1/16W	
R942	1-216-864-11	METAL CHIP	0	5%	1/16W	
R943	1-216-864-11	METAL CHIP	0	5%	1/16W	(TR70/TR80)
R944	1-216-864-11	METAL CHIP	0	5%	1/16W	(TR42/TR72/TR82/TR400/TR430/TR550/TR750)
R945	1-218-847-11	METAL CHIP	1K	0.50%	1/16W	
R946	1-216-841-11	METAL CHIP	47K	5%	1/16W	(TR70/TR80)
R947	1-216-828-11	METAL CHIP	3.9K	5%	1/16W	(TR70/TR80)
R948	1-216-837-11	METAL CHIP	22K	5%	1/16W	(TR70/TR80)
R949	1-216-841-11	METAL CHIP	47K	5%	1/16W	(TR70/TR80)
		< TRANSFORMER >				
T901	1-426-730-11	TRANSFORMER, CONVERTER				

****

Ref. No.	Part No.	Description				Remark
*	1-651-890-11	FP-49 FLEXIBLE BOARD				
		**********				(TR82/TR400/TR550/TR750) (Ref. No. 3,000 Series)
		< SENSOR >				
SE691	1-810-024-31	SENSOR, ANGULAR VELOCITY				
SE692	1-810-024-41	SENSOR, ANGULAR VELOCITY				

****

Ref. No.	Part No.	Description				Remark
*	A-7072-004-A	FP-89 (CD) BOARD, COMPLETE				
		**********				(TR82/TR400/TR550/TR750)
*	A-7072-005-A	FP-89 (CD) BOARD, COMPLETE				
		**********				(TR42/TR70/TR72/TR80/TR430) (Ref. No. 3,000 Series)
		< CAPACITOR >				
C691	1-135-214-21	TANTAL. CHIP	4.7uF	20%	20V	
C692	1-135-210-11	TANTALUM CHIP	4.7uF	20%	10V	
C694	1-164-346-11	CERAMIC CHIP	1uF		16V	
C695	1-164-156-11	CERAMIC CHIP	0.1uF		25V	
C696	1-104-908-11	TANTAL. CHIP	47uF	20%	4V	
		< IC >				
IC691	A-7030-368-A	CCD BLOCK ASSY (AUTO) (054 SERVICE) (CCD IMAGER) (TR42/TR70/TR72/TR80/TR430)				
IC691	A-7030-373-A	CCD BLOCK ASSY (AUTO) (059V SERVICE) (CCD IMAGER) (TR82/TR400/TR550/TR750)				
		< COIL >				
L691	1-412-963-11	INDUCTOR 100uH				
		< TRANSISTOR >				
Q691	8-729-232-86	TRANSISTOR	2SK1875-BL/V			
Q692	8-729-117-73	TRANSISTOR	2SC4178-F14			
		< RESISTOR >				
R691	1-216-295-00	METAL CHIP	0	5%	1/10W	
R692	1-216-829-11	METAL CHIP	4.7K	5%	1/16W	
R693	1-216-839-11	METAL CHIP	33K	5%	1/16W	(TR42/TR70/TR72/TR80/TR430)
R693	1-216-840-11	METAL CHIP	39K	5%	1/16W	(TR82/TR400/TR550/TR750)
R694	1-216-819-11	METAL CHIP	680	5%	1/16W	(TR42/TR70/TR72/TR80/TR430)
R694	1-216-820-11	METAL CHIP	820	5%	1/16W	(TR82/TR400/TR550/TR750)
R695	1-216-845-11	METAL CHIP	100K	5%	1/16W	(TR82/TR400/TR550/TR750)

Be sure to read "Note on the CCD Imager replacement" on page 4-6 when changing the CCD imager.

Ref. No.	Part No.	Description				Remark
R910	1-216-029-00	METAL CHIP	150	5%	1/10W	
R911	1-216-029-00	METAL CHIP	150	5%	1/10W	
R912	1-216-029-00	METAL CHIP	150	5%	1/10W	
R913	1-216-041-00	METAL CHIP	470	5%	1/10W	
R915	1-216-864-11	METAL CHIP	0	5%	1/16W	
R916	1-216-819-11	METAL CHIP	680	5%	1/16W	
R919	1-216-836-11	METAL CHIP	10K	5%	1/16W	
R920	1-216-841-11	METAL CHIP	47K	5%	1/16W	
R921	1-412-052-21	INDUCTOR CHIP 1uH				
R922	1-216-833-11	METAL CHIP	15K	5%	1/16W	
R923	1-412-052-21	INDUCTOR CHIP 1uH				
R924	1-412-979-21	INDUCTOR 1uH				
R925	1-216-825-11	METAL CHIP	2.2K	5%	1/16W	
R926	1-216-841-11	METAL CHIP	47K	5%	1/16W	
R931	1-216-864-11	METAL CHIP	0	5%	1/16W	
R932	1-412-979-21	INDUCTOR 1uH				
R933	1-412-979-21	INDUCTOR 1uH				(TR72/TR84/TR400/TR430/TR750)
R934	1-216-864-11	METAL CHIP	0	5%	1/16W	
R936	1-412-979-21	INDUCTOR	1uH			
R937	1-216-864-11	METAL CHIP	0	5%	1/16W	(TR42/TR72/TR82/TR400/TR430/TR550/TR750)
R938	1-216-864-11	METAL CHIP	0	5%	1/16W	(TR42/TR72/TR82/TR400/TR430/TR550/TR750)
R939	1-216-864-11	METAL CHIP	0	5%	1/16W	(TR70/TR80)
R940	1-216-864-11	METAL CHIP	0	5%	1/16W	(TR42/TR72/TR82/TR400/TR430/TR550/TR750)
R941	1-218-849-11	METAL CHIP	1.8K	0.50%	1/16W	
R942	1-216-864-11	METAL CHIP	0	5%	1/16W	
R943	1-216-864-11	METAL CHIP	0	5%	1/16W	(TR70/TR80)
R944	1-216-864-11	METAL CHIP	0	5%	1/16W	(TR42/TR72/TR82/TR400/TR430/TR550/TR750)
R945	1-218-847-11	METAL CHIP	1K	0.50%	1/16W	
R946	1-216-841-11	METAL CHIP	47K	5%	1/16W	(TR70/TR80)
R947	1-218-828-11	METAL CHIP	3.9K	5%	1/16W	(TR70/TR80)
R948	1-216-837-11	METAL CHIP	22K	5%	1/16W	(TR70/TR80)
R949	1-216-841-11	METAL CHIP	47K	5%	1/16W	(TR70/TR80)
		< TRANSFORMER >				
T901	1-426-730-11	TRANSFORMER, CONVERTER				

****

Ref. No.	Part No.	Description				Remark
*	1-651-880-11	FP-49 FLEXIBLE BOARD				
		**********				(TR82/TR400/TR550/TR750) (Ref. No. 8,000 Series)
		< SENSOR >				
SM801	1-810-024-81	SENSOR, ANGULAR VELOCITY				
SM802	1-810-024-41	SENSOR, ANGULAR VELOCITY				

****

Ref. No.	Part No.	Description				Remark
*	A-7072-004-A	FP-89 (CD) BOARD, COMPLETE				
		**********				(TR82/TR400/TR550/TR750)
*	A-7072-005-A	FP-89 (CD) BOARD, COMPLETE				
		**********				(TR42/TR70/TR72/TR80/TR430) (Ref. No. 3,000 Series)
		< CAPACITOR >				
C801	1-135-214-21	TANTAL CHIP	4.7uF	20%	20V	
C802	1-135-210-11	TANTALUM CHIP	4.7uF	20%	10V	
C804	1-164-246-11	CERAMIC CHIP	1uF		16V	
C805	1-164-158-11	CERAMIC CHIP	0.1uF		25V	
C806	1-104-903-11	TANTAL CHIP	47uF	20%	4V	
		< IC >				
IC501	A-7030-969-A	CCD BLOCK ASSY (AUTO)(054 SERVICE) (CCD IMAGER)(TR42/TR70/TR72/TR80/TR430)				
IC601	A-7030-978-A	CCD BLOCK ASSY (AUTO)(059V SERVICE) (CCD IMAGER)(TR82/TR400/TR550/TR750)				
		< COIL >				
L801	1-412-988-11	INDUCTOR 100uH				
		< TRANSISTOR >				
Q801	8-729-232-86	TRANSISTOR	2SK1875-BL/Y			
Q802	8-729-117-73	TRANSISTOR	2SC4176-F14			
		< RESISTOR >				
R501	1-216-295-00	METAL CHIP	0	5%	1/10W	
R502	1-216-829-11	METAL CHIP	4.7K	5%	1/16W	
R503	1-216-839-11	METAL CHIP	33K	5%	1/16W	(TR42/TR70/TR72/TR80/TR430)
R503	1-216-840-11	METAL CHIP	39K	5%	1/16W	(TR82/TR400/TR550/TR750)
R504	1-216-819-11	METAL CHIP	680	5%	1/16W	(TR42/TR70/TR72/TR80/TR430)
R504	1-216-820-11	METAL CHIP	820	5%	1/16W	(TR82/TR400/TR550/TR750)
R506	1-216-845-11	METAL CHIP	100K	5%	1/16W	(TR82/TR400/TR550/TR750)

Be sure to read "Note on the CCD imager replacement" on page 4-8 when changing the CCD imager.

Ref. No.	Part No.	Description				Remark
R695	1-216-849-11	METAL CHIP	220K	5%	1/16W	
			(TR42/TR70/TR72/TR80/TR430)			
R696	1-216-809-11	METAL CHIP	100	5%	1/16W	
R697	1-216-833-11	METAL CHIP	10K	5%	1/16W	

****

* A-7066-078-A HE-14 BOARD, COMPLETE (TR400/TR750)
****
(Ref. No. 20,000 Series)

< CAPACITOR >

Ref. No.	Part No.	Description				Remark
C1101	1-162-917-11	CERAMIC CHIP	15PF	5%	50V	
C1102	1-162-918-11	CERAMIC CHIP	18PF	5%	50V	
C1103	1-162-917-11	CERAMIC CHIP	15PF	5%	50V	
C1104	1-162-918-11	CERAMIC CHIP	18PF	5%	50V	
C1106	1-162-919-11	CERAMIC CHIP	22PF	5%	50V	
C1107	1-162-975-11	CERAMIC CHIP	24PF	5%	50V	
C1108	1-162-923-11	CERAMIC CHIP	47PF	5%	50V	
C1109	1-162-928-11	CERAMIC CHIP	120PF	5%	50V	
C1110	1-162-910-11	CERAMIC CHIP	5PF	0.25PF	50V	
C1111	1-162-974-11	CERAMIC CHIP	0.01uF		50V	
C1112	1-162-970-11	CERAMIC CHIP	0.01uF	10%	25V	
C1113	1-164-005-11	CERAMIC CHIP	0.47uF		25V	
C1114	1-162-970-11	CERAMIC CHIP	0.01uF	10%	25V	
C1115	1-162-970-11	CERAMIC CHIP	0.01uF	10%	25V	
C1116	1-162-970-11	CERAMIC CHIP	0.01uF	10%	25V	
C1117	1-162-970-11	CERAMIC CHIP	0.01uF	10%	25V	
C1118	1-162-970-11	CERAMIC CHIP	0.01uF	10%	25V	
C1119	1-162-919-11	CERAMIC CHIP	22PF	5%	50V	
C1121	1-162-970-11	CERAMIC CHIP	0.01uF	10%	25V	
C1122	1-164-218-11	CERAMIC CHIP	180PF	0.25PF	50V	
C1123	1-164-005-11	CERAMIC CHIP	0.47uF		25V	
C1124	1-162-925-11	CERAMIC CHIP	68PF	5%	50V	
C1125	1-162-970-11	CERAMIC CHIP	0.01uF	10%	25V	
C1126	1-162-925-11	CERAMIC CHIP	68PF	5%	50V	
C1127	1-162-910-11	CERAMIC CHIP	5PF	0.25PF	50V	
C1128	1-162-970-11	CERAMIC CHIP	0.01uF	10%	25V	
C1129	1-162-925-11	CERAMIC CHIP	68PF	5%	50V	
C1130	1-162-974-11	CERAMIC CHIP	0.01uF		50V	
C1131	1-162-974-11	CERAMIC CHIP	0.01uF		50V	
C1132	1-162-970-11	CERAMIC CHIP	0.01uF	10%	25V	
C1133	1-162-919-11	CERAMIC CHIP	22PF	5%	50V	
C1134	1-162-974-11	CERAMIC CHIP	0.01uF		50V	
C1135	1-162-970-11	CERAMIC CHIP	0.01uF	10%	25V	
C1136	1-135-259-11	TANTAL. CHIP	10uF	20%	6.3V	
C1137	1-162-974-11	CERAMIC CHIP	0.01uF		50V	
C1138	1-162-970-11	CERAMIC CHIP	0.01uF	10%	25V	
C1140	1-162-974-11	CERAMIC CHIP	0.01uF		50V	
C1141	1-162-974-11	CERAMIC CHIP	0.01uF		50V	
C1142	1-164-392-11	CERAMIC CHIP	390PF	5%	50V	
C1143	1-162-912-11	CERAMIC CHIP	7PF	0.5PF	50V	
C1144	1-162-918-11	CERAMIC CHIP	18PF	5%	50V	
C1146	1-135-259-11	TANTAL. CHIP	10uF	20%	6.3V	
C1150	1-162-913-11	CERAMIC CHIP	8PF	0.5PF	50V	
C1151	1-162-917-11	CERAMIC CHIP	15PF	5%	50V	
C1152	1-162-970-11	CERAMIC CHIP	0.01uF	10%	25V	
C1155	1-135-259-11	TANTAL. CHIP	10uF	20%	6.3V	
C1156	1-164-360-11	CERAMIC CHIP	0.1uF		16V	
C1157	1-135-259-11	TANTAL. CHIP	10uF	20%	6.3V	
C1158	1-162-922-11	CERAMIC CHIP	39PF	5%	50V	
C1160	1-164-360-11	CERAMIC CHIP	0.1uF		16V	
C1161	1-164-218-11	CERAMIC CHIP	180PF	0.25PF	50V	
C1162	1-162-949-11	CERAMIC CHIP	47PF	5%	50V	
C1163	1-162-941-11	CERAMIC CHIP	10PF	0.5PF	50V	
C1164	1-135-259-11	TANTAL. CHIP	10uF	20%	6.3V	
C1165	1-135-181-21	TANTALUM CHIP	4.7uF	20%	6.3V	
C1166	1-162-957-11	CERAMIC CHIP	220PF	5%	50V	
C1167	1-135-259-11	TANTAL. CHIP	10uF	20%	6.3V	
C1168	1-162-959-11	CERAMIC CHIP	330PF	5%	50V	
C1169	1-164-155-11	CERAMIC CHIP	75PF	5%	50V	
C1171	1-162-974-11	CERAMIC CHIP	0.01uF		50V	
C1173	1-162-952-11	CERAMIC CHIP	82PF	5%	50V	
C1175	1-162-955-11	CERAMIC CHIP	150PF	5%	50V	
C1176	1-162-949-11	CERAMIC CHIP	47PF	5%	50V	
C1178	1-162-957-11	CERAMIC CHIP	220PF	5%	50V	
C1179	1-162-943-11	CERAMIC CHIP	15PF	5%	50V	
C1181	1-164-218-11	CERAMIC CHIP	180PF	0.25PF	50V	
C1182	1-162-955-11	CERAMIC CHIP	150PF	5%	50V	
C1183	1-135-259-11	TANTAL. CHIP	10uF	20%	6.3V	
C1184	1-135-259-11	TANTAL. CHIP	10uF	20%	6.3V	
C1185	1-164-149-11	CERAMIC CHIP	36PF	5%	50V	
C1188	1-135-259-11	TANTAL. CHIP	10uF	20%	6.3V	
C1189	1-135-259-11	TANTAL. CHIP	10uF	20%	6.3V	
C1192	1-164-360-11	CERAMIC CHIP	0.1uF		16V	
C1193	1-164-218-11	CERAMIC CHIP	180PF	0.25PF	50V	

< CONNECTOR >

Ref. No.	Part No.	Description	Remark
* CN1101	1-573-341-11	CONNECTOR, BOARD TO BOARD 26P	

< DIODE >

Ref. No.	Part No.	Description	Remark
D1101	8-719-404-49	DIODE MA111	
D1102	8-719-027-48	DIODE MA142WA	
D1103	8-719-027-48	DIODE MA142WA	
D1105	8-719-404-49	DIODE MA111	

< FILTER >

Ref. No.	Part No.	Description	Remark
FL1101	1-236-775-11	FILTER, LOW PASS (DEM)	
FL1102	1-239-112-21	FILTER, LOW PASS (Y)	

< IC >

Ref. No.	Part No.	Description	Remark
IC1101	8-752-058-02	IC CXA1509AR	

Ref.No.	Part No.	Description			Remark
R866	1-216-849-11	METAL CHIP	220K	5%	1/10W
			(TR62/TR70/TR7X/TR80/TR420)		
R896	1-216-809-11	METAL CHIP	100	5%	1/10W
R897	1-216-833-11	METAL CHIP	10K	5%	1/10W

* * *

* A-7066-078-A HE-14 BOARD, COMPLETE (TR400/TR750)

(Ref. No. 20,000 Series)

< CAPACITOR >

Ref.No.	Part No.	Description			Remark
C1101	1-162-917-11	CERAMIC CHIP	15PF	5%	50V
C1102	1-162-918-11	CERAMIC CHIP	18PF	5%	50V
C1103	1-162-917-11	CERAMIC CHIP	15PF	5%	50V
C1104	1-162-918-11	CERAMIC CHIP	18PF	5%	50V
C1106	1-162-919-11	CERAMIC CHIP	22PF	5%	50V
C1107	1-162-975-11	CERAMIC CHIP	24PF	5%	50V
C1108	1-162-923-11	CERAMIC CHIP	47PF	5%	50V
C1109	1-162-928-11	CERAMIC CHIP	120PF	5%	50V
C1110	1-162-910-11	CERAMIC CHIP	5PF	0.25PF	50V
C1111	1-162-974-11	CERAMIC CHIP	0.01uF		50V
C1112	1-162-970-11	CERAMIC CHIP	0.01uF	10%	25V
C1113	1-164-005-11	CERAMIC CHIP	0.47uF		25V
C1114	1-162-970-11	CERAMIC CHIP	0.01uF	10%	25V
C1115	1-162-970-11	CERAMIC CHIP	0.01uF	10%	25V
C1116	1-162-970-11	CERAMIC CHIP	0.01uF	10%	25V
C1117	1-162-970-11	CERAMIC CHIP	0.01uF	10%	25V
C1118	1-162-970-11	CERAMIC CHIP	0.01uF	10%	25V
C1119	1-162-919-11	CERAMIC CHIP	22PF	5%	50V
C1121	1-162-970-11	CERAMIC CHIP	0.01uF	10%	25V
C1122	1-164-218-11	CERAMIC CHIP	180PF	0.25PF	50V
C1123	1-164-005-11	CERAMIC CHIP	0.47uF		25V
C1124	1-162-925-11	CERAMIC CHIP	68PF	5%	50V
C1125	1-162-970-11	CERAMIC CHIP	0.01uF	10%	25V
C1126	1-162-925-11	CERAMIC CHIP	68PF	5%	50V
C1127	1-162-910-11	CERAMIC CHIP	5PF	0.25PF	50V
C1128	1-162-970-11	CERAMIC CHIP	0.01uF	10%	25V
C1129	1-162-925-11	CERAMIC CHIP	68PF	5%	50V
C1130	1-162-974-11	CERAMIC CHIP	0.01uF		50V
C1131	1-162-974-11	CERAMIC CHIP	0.01uF		50V
C1132	1-162-970-11	CERAMIC CHIP	0.01uF	10%	25V
C1133	1-162-919-11	CERAMIC CHIP	22PF	5%	50V
C1134	1-162-974-11	CERAMIC CHIP	0.01uF		50V
C1135	1-162-970-11	CERAMIC CHIP	0.01uF	10%	25V
C1136	1-135-259-11	TANTAL. CHIP	10uF	20%	6.3V
C1137	1-162-974-11	CERAMIC CHIP	0.01uF		50V
C1138	1-162-970-11	CERAMIC CHIP	0.01uF	10%	25V
C1140	1-162-974-11	CERAMIC CHIP	0.01uF		50V
C1141	1-162-974-11	CERAMIC CHIP	0.01uF		50V
C1142	1-164-232-11	CERAMIC CHIP	330PF	5%	50V
C1143	1-162-912-11	CERAMIC CHIP	7PF	0.5PF	50V
C1144	1-162-918-11	CERAMIC CHIP	18PF	5%	50V
C1146	1-135-259-11	TANTAL. CHIP	10uF	20%	6.3V
C1150	1-162-913-11	CERAMIC CHIP	8PF	0.5PF	50V
C1151	1-162-917-11	CERAMIC CHIP	15PF	5%	50V
C1153	1-162-970-11	CERAMIC CHIP	0.01uF	10%	25V
C1155	1-135-259-11	TANTAL. CHIP	10uF	20%	6.3V
C1156	1-164-360-11	CERAMIC CHIP	0.1uF		16V
C1157	1-135-259-11	TANTAL. CHIP	10uF	20%	6.3V
C1158	1-162-922-11	CERAMIC CHIP	39PF	5%	50V
C1160	1-164-360-11	CERAMIC CHIP	0.1uF		16V
C1161	1-164-218-11	CERAMIC CHIP	180PF	0.25PF	50V
C1162	1-162-949-11	CERAMIC CHIP	47PF	5%	50V
C1163	1-162-941-11	CERAMIC CHIP	10PF	0.5PF	50V
C1164	1-135-259-11	TANTAL. CHIP	10uF	20%	6.3V
C1165	1-135-181-21	TANTALUM CHIP	4.7uF	20%	6.3V
C1166	1-162-967-11	CERAMIC CHIP	220PF	5%	50V
C1167	1-135-259-11	TANTAL. CHIP	10uF	20%	6.3V
C1168	1-162-959-11	CERAMIC CHIP	330PF	5%	50V
C1169	1-164-155-11	CERAMIC CHIP	75PF	5%	50V
C1171	1-162-974-11	CERAMIC CHIP	0.01uF		50V
C1173	1-162-958-11	CERAMIC CHIP	82PF	5%	50V
C1175	1-162-965-11	CERAMIC CHIP	150PF	5%	50V
C1176	1-162-948-11	CERAMIC CHIP	47PF	5%	50V
C1178	1-162-967-11	CERAMIC CHIP	220PF	5%	50V
C1179	1-162-943-11	CERAMIC CHIP	15PF	5%	50V
C1181	1-164-218-11	CERAMIC CHIP	180PF	0.25PF	50V
C1182	1-162-955-11	CERAMIC CHIP	150PF	5%	50V
C1183	1-135-259-11	TANTAL. CHIP	10uF	20%	6.3V
C1184	1-135-259-11	TANTAL. CHIP	10uF	20%	6.3V
C1185	1-164-149-11	CERAMIC CHIP	36PF	5%	50V
C1188	1-135-259-11	TANTAL. CHIP	10uF	20%	6.3V
C1189	1-135-259-11	TANTAL. CHIP	10uF	20%	6.3V
C1192	1-164-360-11	CERAMIC CHIP	0.1uF		16V
C1193	1-164-218-11	CERAMIC CHIP	180PF	0.25PF	50V

< CONNECTOR >

Ref.No.	Part No.	Description			Remark
* CN1101	1-573-241-11	CONNECTOR, BOARD TO BOARD 36P			

< DIODE >

Ref.No.	Part No.	Description			Remark
D1101	8-719-404-49	DIODE	MA111		
D1102	8-719-037-48	DIODE	MA142WA		
D1103	8-719-037-48	DIODE	MA142WA		
D1105	8-719-404-49	DIODE	MA111		

< FILTER >

Ref.No.	Part No.	Description			Remark
FL1101	1-236-715-11	FILTER, LOW PASS (CHR)			
FL1102	1-239-113-21	FILTER, LOW PASS (Y)			

< IC >

Ref.No.	Part No.	Description			Remark
IC1101	8-752-058-08	IC	CXA1509AR		

Ref. No.	Part No.	Description	Remark
IC1102	8-759-070-51	IC SN74HCU04ADB	
		< COIL >	
L1101	1-412-956-21	INDUCTOR 27uH	
L1102	1-412-954-11	INDUCTOR 18uH	
L1103	1-412-947-11	INDUCTOR 4.7uH	
L1104	1-412-959-11	INDUCTOR 47uH	
L1105	1-412-954-11	INDUCTOR 18uH	
L1106	1-412-945-11	INDUCTOR 3.3uH	
L1108	1-412-954-11	INDUCTOR 18uH	
L1109	1-412-948-11	INDUCTOR 5.6uH	
L1110	1-412-956-21	INDUCTOR 27uH	
L1111	1-410-655-31	INDUCTOR CHIP 120uH	
L1112	1-412-058-11	INDUCTOR CHIP 10uH	
L1113	1-412-058-11	INDUCTOR CHIP 10uH	
L1114	1-412-957-11	INDUCTOR 33uH	
L1115	1-412-952-11	INDUCTOR 12uH	
L1116	1-412-948-11	INDUCTOR 5.6uH	
L1118	1-412-953-11	INDUCTOR 15uH	
L1119	1-412-949-21	INDUCTOR 6.8uH	
L1121	1-412-947-11	INDUCTOR 4.7uH	
L1122	1-412-954-11	INDUCTOR 18uH	
L1123	1-412-949-21	INDUCTOR 6.8uH	
L1124	1-412-960-21	INDUCTOR 56uH	
		< TRANSISTOR >	
Q1102	8-729-402-42	TRANSISTOR UN5213	
Q1103	8-729-012-50	TRANSISTOR 2SC4400	
Q1107	8-729-402-42	TRANSISTOR UN5213	
Q1110	8-729-120-28	TRANSISTOR 2SC1623	
Q1111	8-729-420-24	TRANSISTOR 2SB1218A	
Q1113	8-729-012-50	TRANSISTOR 2SC4400	
Q1114	8-729-402-81	TRANSISTOR XN4501	
Q1115	8-729-012-50	TRANSISTOR 2SC4400	
Q1117	8-729-230-63	TRANSISTOR 2SC4116	
Q1118	8-729-230-63	TRANSISTOR 2SC4116	
Q1119	8-729-402-42	TRANSISTOR UN5213	
Q1120	8-729-403-35	TRANSISTOR UN5113	
Q1121	8-729-420-24	TRANSISTOR 2SB1218A	
Q1123	8-729-012-50	TRANSISTOR 2SC4400	
Q1125	8-729-420-24	TRANSISTOR 2SB1218A	
Q1126	8-729-012-50	TRANSISTOR 2SC4400	
Q1127	8-729-403-35	TRANSISTOR UN5113	
Q1128	8-729-230-63	TRANSISTOR 2SC4116	
Q1129	8-729-012-50	TRANSISTOR 2SC4400	
Q1131	8-729-824-02	TRANSISTOR 2SA1838	
Q1132	8-729-012-50	TRANSISTOR 2SC4400	
Q1133	8-729-012-50	TRANSISTOR 2SC4400	
Q1134	8-729-402-42	TRANSISTOR UN5213	
Q1137	8-729-230-63	TRANSISTOR 2SC4116	

Ref. No.	Part No.	Description	Remark
Q1138	8-729-420-24	TRANSISTOR 2SB1218A	
		< RESISTOR >	
R1101	1-216-821-11	METAL CHIP 1K 5% 1/16W	
R1102	1-216-821-11	METAL CHIP 1K 5% 1/16W	
R1103	1-216-820-11	METAL CHIP 820 5% 1/16W	
R1104	1-216-819-11	METAL CHIP 680 5% 1/16W	
R1105	1-216-817-11	METAL CHIP 470 5% 1/16W	
R1106	1-216-809-11	METAL CHIP 100 5% 1/16W	
R1107	1-216-815-11	METAL CHIP 330 5% 1/16W	
R1108	1-216-813-11	METAL CHIP 220 5% 1/16W	
R1109	1-216-813-11	METAL CHIP 220 5% 1/16W	
R1111	1-216-837-11	METAL CHIP 22K 5% 1/16W	
R1112	1-216-837-11	METAL CHIP 22K 5% 1/16W	
R1113	1-216-821-11	METAL CHIP 1K 5% 1/16W	
R1114	1-216-821-11	METAL CHIP 1K 5% 1/16W	
R1115	1-216-821-11	METAL CHIP 1K 5% 1/16W	
R1116	1-216-833-11	METAL CHIP 10K 5% 1/16W	
R1118	1-216-829-11	METAL CHIP 4.7K 5% 1/16W	
R1119	1-216-816-11	METAL CHIP 390 5% 1/16W	
R1120	1-216-827-11	METAL CHIP 3.3K 5% 1/16W	
R1123	1-216-827-11	METAL CHIP 3.3K 5% 1/16W	
R1124	1-216-826-11	METAL CHIP 2.7K 5% 1/16W	
R1125	1-216-840-11	METAL CHIP 39K 5% 1/16W	
R1127	1-216-841-11	METAL CHIP 47K 5% 1/16W	
R1128	1-216-833-11	METAL CHIP 10K 5% 1/16W	
R1130	1-216-821-11	METAL CHIP 1K 5% 1/16W	
R1131	1-216-821-11	METAL CHIP 1K 5% 1/16W	
R1132	1-216-820-11	METAL CHIP 820 5% 1/16W	
R1134	1-216-820-11	METAL CHIP 820 5% 1/16W	
R1135	1-216-814-11	METAL CHIP 270 5% 1/16W	
R1136	1-216-821-11	METAL CHIP 1K 5% 1/16W	
R1138	1-216-821-11	METAL CHIP 1K 5% 1/16W	
R1139	1-216-821-11	METAL CHIP 1K 5% 1/16W	
R1148	1-216-837-11	METAL CHIP 22K 5% 1/16W	
R1149	1-216-838-11	METAL CHIP 27K 5% 1/16W	
R1151	1-216-826-11	METAL CHIP 2.7K 5% 1/16W	
R1152	1-216-833-11	METAL CHIP 10K 5% 1/16W	
R1153	1-216-818-11	METAL CHIP 560 5% 1/16W	
R1154	1-216-821-11	METAL CHIP 1K 5% 1/16W	
R1155	1-216-817-11	METAL CHIP 470 5% 1/16W	
R1156	1-216-825-11	METAL CHIP 2.2K 5% 1/16W	
R1157	1-216-829-11	METAL CHIP 4.7K 5% 1/16W	
R1158	1-216-825-11	METAL CHIP 2.2K 5% 1/16W	
R1159	1-216-829-11	METAL CHIP 4.7K 5% 1/16W	
R1160	1-216-820-11	METAL CHIP 820 5% 1/16W	
R1161	1-216-819-11	METAL CHIP 680 5% 1/16W	
R1162	1-216-845-11	METAL CHIP 100K 5% 1/16W	
R1163	1-216-817-11	METAL CHIP 470 5% 1/16W	
R1164	1-216-829-11	METAL CHIP 4.7K 5% 1/16W	

Ref. No.	Part No.	Description	Remark
IC1102	8-759-070-61	IC SM74HC04AOB	
		< COIL >	
L1101	1-412-956-21	INDUCTOR 27nH	
L1102	1-412-954-11	INDUCTOR 18nH	
L1103	1-412-947-11	INDUCTOR 4.7nH	
L1104	1-412-959-11	INDUCTOR 47nH	
L1105	1-412-954-11	INDUCTOR 18nH	
L1106	1-412-945-11	INDUCTOR 3.9nH	
L1108	1-412-954-11	INDUCTOR 18nH	
L1109	1-412-948-11	INDUCTOR 5.6nH	
L1110	1-412-956-21	INDUCTOR 27nH	
L1111	1-410-655-31	INDUCTOR CHIP 120nH	
L1112	1-412-958-11	INDUCTOR CHIP 10nH	
L1113	1-412-958-11	INDUCTOR CHIP 10nH	
L1114	1-412-957-11	INDUCTOR 39nH	
L1115	1-412-952-11	INDUCTOR 12nH	
L1116	1-412-948-11	INDUCTOR 5.6nH	
L1118	1-412-953-11	INDUCTOR 15nH	
L1119	1-412-949-21	INDUCTOR 6.8nH	
L1121	1-412-947-11	INDUCTOR 4.7nH	
L1122	1-412-954-11	INDUCTOR 18nH	
L1123	1-412-949-21	INDUCTOR 6.8nH	
L1124	1-412-960-21	INDUCTOR 56nH	
		< TRANSISTOR >	
Q1102	8-729-402-42	TRANSISTOR UN5213	
Q1103	8-729-012-50	TRANSISTOR 2SC4400	
Q1107	8-729-402-42	TRANSISTOR UN5213	
Q1110	8-729-120-28	TRANSISTOR 2SC1623	
Q1111	8-729-420-24	TRANSISTOR 2SB1218A	
Q1113	8-729-012-50	TRANSISTOR 2SC4400	
Q1114	8-729-402-81	TRANSISTOR XN4501	
Q1115	8-729-012-50	TRANSISTOR 2SC4400	
Q1117	8-729-230-83	TRANSISTOR 2SC4116	
Q1118	8-729-230-83	TRANSISTOR 2SC4116	
Q1119	8-729-402-42	TRANSISTOR UN5213	
Q1120	8-729-403-35	TRANSISTOR UN5118	
Q1121	8-729-420-24	TRANSISTOR 2SB1218A	
Q1122	8-729-012-50	TRANSISTOR 2SC4400	
Q1125	8-729-420-24	TRANSISTOR 2SB1218A	
Q1126	8-729-012-50	TRANSISTOR 2SC4400	
Q1127	8-729-403-35	TRANSISTOR UN5118	
Q1128	8-729-230-83	TRANSISTOR 2SC4116	
Q1129	8-729-012-50	TRANSISTOR 2SC4400	
Q1131	8-729-834-02	TRANSISTOR 2SA1838	
Q1132	8-729-012-50	TRANSISTOR 2SC4400	
Q1133	8-729-012-50	TRANSISTOR 2SC4400	
Q1134	8-729-402-42	TRANSISTOR UN5213	
Q1137	8-729-230-83	TRANSISTOR 2SC4116	
Q1138	8-729-420-24	TRANSISTOR 2SB1218A	
		< RESISTOR >	
R1101	1-216-821-11	METAL CHIP 1K 5% 1/16W	
R1102	1-216-821-11	METAL CHIP 1K 5% 1/16W	
R1103	1-216-820-11	METAL CHIP 680 5% 1/16W	
R1104	1-216-819-11	METAL CHIP 680 5% 1/16W	
R1105	1-216-817-11	METAL CHIP 470 5% 1/16W	
R1106	1-216-809-11	METAL CHIP 100 5% 1/16W	
R1107	1-216-815-11	METAL CHIP 330 5% 1/16W	
R1108	1-216-813-11	METAL CHIP 220 5% 1/16W	
R1109	1-216-813-11	METAL CHIP 220 5% 1/16W	
R1111	1-216-837-11	METAL CHIP 22K 5% 1/16W	
R1112	1-216-837-11	METAL CHIP 22K 5% 1/16W	
R1113	1-216-821-11	METAL CHIP 1K 5% 1/16W	
R1114	1-216-821-11	METAL CHIP 1K 5% 1/16W	
R1115	1-216-821-11	METAL CHIP 1K 5% 1/16W	
R1116	1-216-833-11	METAL CHIP 10K 5% 1/16W	
R1118	1-216-829-11	METAL CHIP 4.7K 5% 1/16W	
R1119	1-216-816-11	METAL CHIP 390 5% 1/16W	
R1120	1-216-827-11	METAL CHIP 3.3K 5% 1/16W	
R1123	1-216-827-11	METAL CHIP 3.3K 5% 1/16W	
R1124	1-216-830-11	METAL CHIP 2.7K 5% 1/16W	
R1125	1-216-840-11	METAL CHIP 39K 5% 1/16W	
R1127	1-216-841-11	METAL CHIP 47K 5% 1/16W	
R1128	1-216-833-11	METAL CHIP 10K 5% 1/16W	
R1130	1-216-821-11	METAL CHIP 1K 5% 1/16W	
R1131	1-216-821-11	METAL CHIP 1K 5% 1/16W	
R1132	1-216-820-11	METAL CHIP 680 5% 1/16W	
R1134	1-216-820-11	METAL CHIP 680 5% 1/16W	
R1135	1-216-814-11	METAL CHIP 270 5% 1/16W	
R1136	1-216-821-11	METAL CHIP 1K 5% 1/16W	
R1138	1-216-821-11	METAL CHIP 1K 5% 1/16W	
R1139	1-216-821-11	METAL CHIP 1K 5% 1/16W	
R1140	1-216-837-11	METAL CHIP 22K 5% 1/16W	
R1149	1-216-838-11	METAL CHIP 27K 5% 1/16W	
R1151	1-216-826-11	METAL CHIP 2.7K 5% 1/16W	
R1152	1-216-833-11	METAL CHIP 10K 5% 1/16W	
R1153	1-216-818-11	METAL CHIP 560 5% 1/16W	
R1154	1-216-821-11	METAL CHIP 1K 5% 1/16W	
R1155	1-216-817-11	METAL CHIP 470 5% 1/16W	
R1156	1-216-835-11	METAL CHIP 15K 5% 1/16W	
R1157	1-216-829-11	METAL CHIP 4.7K 5% 1/16W	
R1158	1-216-826-11	METAL CHIP 2.2K 5% 1/16W	
R1159	1-216-829-11	METAL CHIP 4.7K 5% 1/16W	
R1160	1-216-820-11	METAL CHIP 680 5% 1/16W	
R1161	1-216-819-11	METAL CHIP 680 5% 1/16W	
R1162	1-216-845-11	METAL CHIP 100K 5% 1/16W	
R1163	1-216-817-11	METAL CHIP 470 5% 1/16W	
R1164	1-216-829-11	METAL CHIP 4.7K 5% 1/16W	

Ref.No.	Part No.	Description				Remark
R1165	1-216-814-11	METAL CHIP	270	5%	1/16W	
R1166	1-216-815-11	METAL CHIP	330	5%	1/16W	
R1167	1-216-864-11	METAL CHIP	0	5%	1/16W	
R1168	1-216-826-11	METAL CHIP	2.7K	5%	1/16W	
R1169	1-216-836-11	METAL CHIP	18K	5%	1/16W	
R1170	1-216-839-11	METAL CHIP	33K	5%	1/16W	
R1171	1-216-842-11	METAL CHIP	56K	5%	1/16W	
R1172	1-216-837-11	METAL CHIP	22K	5%	1/16W	
R1173	1-216-837-11	METAL CHIP	22K	5%	1/16W	
R1174	1-216-813-11	METAL CHIP	220	5%	1/16W	
R1175	1-216-813-11	METAL CHIP	220	5%	1/16W	
R1176	1-216-821-11	METAL CHIP	1K	5%	1/16W	
R1177	1-216-814-11	METAL CHIP	270	5%	1/16W	
R1178	1-216-828-11	METAL CHIP	3.9K	5%	1/16W	
R1179	1-216-833-11	METAL CHIP	10K	5%	1/16W	
R1180	1-216-864-11	METAL CHIP	0	5%	1/16W	
R1182	1-216-825-11	METAL CHIP	2.2K	5%	1/16W	
R1183	1-216-811-11	METAL CHIP	150	5%	1/16W	
R1184	1-216-819-11	METAL CHIP	680	5%	1/16W	
R1186	1-216-817-11	METAL CHIP	470	5%	1/16W	
R1187	1-216-815-11	METAL CHIP	330	5%	1/16W	
R1188	1-216-820-11	METAL CHIP	820	5%	1/16W	
R1189	1-216-864-11	METAL CHIP	0	5%	1/16W	
R1190	1-216-816-11	METAL CHIP	390	5%	1/16W	
R1191	1-216-829-11	METAL CHIP	4.7K	5%	1/16W	
R1194	1-216-819-11	METAL CHIP	680	5%	1/16W	
R1196	1-216-833-11	METAL CHIP	10K	5%	1/16W	
R1197	1-216-833-11	METAL CHIP	10K	5%	1/16W	
R1198	1-216-819-11	METAL CHIP	680	5%	1/16W	
R1199	1-216-819-11	METAL CHIP	680	5%	1/16W	
R1202	1-216-811-11	METAL CHIP	150	5%	1/16W	
R1203	1-216-833-11	METAL CHIP	10K	5%	1/16W	
R1204	1-216-815-11	METAL CHIP	330	5%	1/16W	
R1205	1-216-817-11	METAL CHIP	470	5%	1/16W	
R1206	1-216-817-11	METAL CHIP	470	5%	1/16W	
R1207	1-216-815-11	METAL CHIP	330	5%	1/16W	
R1209	1-216-864-11	METAL CHIP	0	5%	1/16W	
R1210	1-216-831-11	METAL CHIP	6.8K	5%	1/16W	
R1214	1-216-820-11	METAL CHIP	820	5%	1/16W	
R1215	1-216-819-11	METAL CHIP	680	5%	1/16W	
R1216	1-216-827-11	METAL CHIP	3.3K	5%	1/16W	
R1217	1-216-827-11	METAL CHIP	3.3K	5%	1/16W	
R1218	1-216-817-11	METAL CHIP	470	5%	1/16W	
R1219	1-216-817-11	METAL CHIP	470	5%	1/16W	
R1220	1-216-864-11	METAL CHIP	0	5%	1/16W	
R1221	1-216-864-11	METAL CHIP	0	5%	1/16W	
R1223	1-216-864-11	METAL CHIP	0	5%	1/16W	
R1226	1-216-864-11	METAL CHIP	0	5%	1/16W	

****

Ref.No.	Part No.	Description	Remark
*	A-7056-012-A	LB-35 BOARD, COMPLETE (TR70/80)	
		**********	
		(Ref. No. 4,000 Series)	
		< CONNECTOR >	
CN801	1-573-812-11	CONNECTOR, BOARD TO BOARD 12P	
		< DIODE >	
D801	8-719-037-83	DIODE LN1371G-(TR)	

****

		LS-33 BOARD	
		**********	
		< DIODE >	
D001	8-719-989-52	DIODE GL4600S	
		< HALL >	
H001	8-719-987-62	DIODE LT140SAZ	
H002	8-719-987-62	DIODE LT140SAZ	
		< TRANSISTOR >	
Q001	8-729-012-46	TRANSISTOR PT4600FS	
Q002	8-729-012-46	TRANSISTOR PT4600FS	
		< RESISTOR >	
R003	1-216-033-00	METAL CHIP 220 5% 1/10W	
R004	1-216-033-00	METAL CHIP 220 5% 1/10W	
R010	1-216-033-00	METAL CHIP 220 5% 1/10W	
R011	1-216-033-00	METAL CHIP 220 5% 1/10W	
		< SWITCH >	
S002	1-572-987-11	SWITCH, PUSH (3 KEY)	

****

*	A-7063-962-A	MA-179 BOARD, COMPLETE	
		**********	
		(TR72/TR80/TR400/TR430/TR750)	
		(Ref. No. 7,000 Series)	
		< CAPACITOR >	
C001	1-164-343-11	CERAMIC CHIP 0.056uF 10% 25V	
C003	1-163-037-11	CERAMIC CHIP 0.022uF 10% 25V	
C005	1-163-023-00	CERAMIC CHIP 0.015uF 5% 50V	
C006	1-163-037-11	CERAMIC CHIP 0.022uF 10% 25V	
C007	1-164-360-11	CERAMIC CHIP 0.1uF 16V	
C008	1-163-037-11	CERAMIC CHIP 0.022uF 10% 25V	
C009	1-164-004-11	CERAMIC CHIP 0.1uF 10% 25V	
C010	1-135-091-21	TANTAL. CHIP 1uF 20% 16V	

Ref. No.	Part No.	Description				Remark
R1165	1-216-814-11	METAL CHIP	270	5%	1/16W	
R1166	1-216-815-11	METAL CHIP	330	5%	1/16W	
R1167	1-216-864-11	METAL CHIP	0	5%	1/16W	
R1168	1-216-828-11	METAL CHIP	2.7K	5%	1/16W	
R1169	1-216-836-11	METAL CHIP	18K	5%	1/16W	
R1170	1-216-839-11	METAL CHIP	33K	5%	1/16W	
R1171	1-216-842-11	METAL CHIP	56K	5%	1/16W	
R1172	1-216-837-11	METAL CHIP	22K	5%	1/16W	
R1173	1-216-837-11	METAL CHIP	22K	5%	1/16W	
R1174	1-216-818-11	METAL CHIP	220	5%	1/16W	
R1175	1-216-818-11	METAL CHIP	220	5%	1/16W	
R1176	1-216-821-11	METAL CHIP	1K	5%	1/16W	
R1177	1-216-814-11	METAL CHIP	270	5%	1/16W	
R1178	1-216-828-11	METAL CHIP	2.9K	5%	1/16W	
R1179	1-216-833-11	METAL CHIP	10K	5%	1/16W	
R1180	1-216-864-11	METAL CHIP	0	5%	1/16W	
R1183	1-216-825-11	METAL CHIP	2.2K	5%	1/16W	
R1183	1-216-811-11	METAL CHIP	150	5%	1/16W	
R1184	1-216-819-11	METAL CHIP	680	5%	1/16W	
R1186	1-216-817-11	METAL CHIP	470	5%	1/16W	
R1187	1-216-815-11	METAL CHIP	330	5%	1/16W	
R1188	1-216-820-11	METAL CHIP	820	5%	1/16W	
R1189	1-216-864-11	METAL CHIP	0	5%	1/16W	
R1190	1-216-816-11	METAL CHIP	390	5%	1/16W	
R1191	1-216-829-11	METAL CHIP	4.7K	5%	1/16W	
R1194	1-216-819-11	METAL CHIP	680	5%	1/16W	
R1196	1-216-833-11	METAL CHIP	10K	5%	1/16W	
R1197	1-216-833-11	METAL CHIP	10K	5%	1/16W	
R1198	1-216-819-11	METAL CHIP	680	5%	1/16W	
R1199	1-216-818-11	METAL CHIP	680	5%	1/16W	
R1202	1-216-811-11	METAL CHIP	150	5%	1/16W	
R1203	1-216-833-11	METAL CHIP	10K	5%	1/16W	
R1204	1-216-815-11	METAL CHIP	330	5%	1/16W	
R1205	1-216-817-11	METAL CHIP	470	5%	1/16W	
R1206	1-216-817-11	METAL CHIP	470	5%	1/16W	
R1207	1-216-815-11	METAL CHIP	330	5%	1/16W	
R1209	1-216-864-11	METAL CHIP	0	5%	1/16W	
R1210	1-216-831-11	METAL CHIP	6.8K	5%	1/16W	
R1214	1-216-820-11	METAL CHIP	820	5%	1/16W	
R1215	1-216-819-11	METAL CHIP	680	5%	1/16W	
R1216	1-216-827-11	METAL CHIP	3.3K	5%	1/16W	
R1217	1-216-827-11	METAL CHIP	3.3K	5%	1/16W	
R1218	1-216-817-11	METAL CHIP	470	5%	1/16W	
R1219	1-216-817-11	METAL CHIP	470	5%	1/16W	
R1220	1-216-864-11	METAL CHIP	0	5%	1/16W	
R1221	1-216-864-11	METAL CHIP	0	5%	1/16W	
R1223	1-216-864-11	METAL CHIP	0	5%	1/16W	
R1224	1-216-864-11	METAL CHIP	0	5%	1/16W	

Ref. No.	Part No.	Description				Remark
*	A-7058-012-A	LB-35 BOARD, COMPLETE (TK70/80)				
		**********				
						(Ref. No. 4,000 Series)
		< CONNECTOR >				
CN801	1-573-812-11	CONNECTOR, BOARD TO BOARD 12P				
		< DIODE >				
D801	8-719-037-81	DIODE LN1371G-(TX)				
**********						
		LS-33 BOARD				
		**********				
		< DIODE >				
D001	8-719-989-63	DIODE GL4500S				
		< HALL >				
H001	8-719-987-81	DIODE LT140SAZ				
H002	8-719-987-81	DIODE LT140SAZ				
		< TRANSISTOR >				
Q001	8-729-012-46	TRANSISTOR PT4500FS				
Q002	8-729-012-46	TRANSISTOR PT4500FS				
		< RESISTOR >				
R003	1-216-033-00	METAL CHIP	220	5%	1/10W	
R004	1-216-033-00	METAL CHIP	220	5%	1/10W	
R210	1-216-033-00	METAL CHIP	220	5%	1/10W	
R211	1-216-033-00	METAL CHIP	220	5%	1/10W	
		< SWITCH >				
S002	1-572-287-11	SWITCH, PUSH (8 KEY)				
**********						
*	A-7088-862-A	MA-179 BOARD, COMPLETE				
		**********				
		(TX7X/TX80/TX400/TX430/TX750)				
						(Ref. No. 7,000 Series)
		< CAPACITOR >				
C001	1-164-843-11	CERAMIC CHIP	0.056uF	10%	25V	
C003	1-163-037-11	CERAMIC CHIP	0.022uF	10%	25V	
C005	1-163-023-00	CERAMIC CHIP	0.015uF	5%	50V	
C006	1-163-037-11	CERAMIC CHIP	0.022uF	10%	25V	
C007	1-164-960-11	CERAMIC CHIP	0.1uF		16V	
C008	1-163-037-11	CERAMIC CHIP	0.022uF	10%	25V	
C009	1-164-004-11	CERAMIC CHIP	0.1uF	10%	25V	
C010	1-135-061-21	TANTAL, CHIP	1uF	20%	16V	

Ref. No.	Part No.	Description			Remark
C011	1-164-232-11	CERAMIC CHIP	0.01uF		50V
C012	1-163-037-11	CERAMIC CHIP	0.022uF	10%	25V
C013	1-162-953-11	CERAMIC CHIP	100PF	5%	50V
C014	1-162-953-11	CERAMIC CHIP	100PF	5%	50V
C015	1-162-966-11	CERAMIC CHIP	0.0022uF	10%	50V
C019	1-164-232-11	CERAMIC CHIP	0.01uF		50V
C020	1-163-037-11	CERAMIC CHIP	0.022uF	10%	25V
C021	1-126-205-11	ELECT CHIP	47uF	20%	6.3V
C022	1-164-004-11	CERAMIC CHIP	0.1uF	10%	25V
C023	1-135-091-21	TANTAL. CHIP	1uF	20%	16V
C024	1-163-037-11	CERAMIC CHIP	0.022uF	10%	25V
C025	1-163-023-00	CERAMIC CHIP	0.015uF	5%	50V
C026	1-163-037-11	CERAMIC CHIP	0.022uF	10%	25V
C027	1-163-037-11	CERAMIC CHIP	0.022uF	10%	25V
C030	1-164-343-11	CERAMIC CHIP	0.056uF	10%	25V
C043	1-128-004-11	ELECT CHIP	10uF	20%	16V

< CONNECTOR >

CN001	1-691-490-21	CONNECTOR, FFC/FPC 11P
CN002	1-580-057-11	PIN, CONNECTOR 4P
CN003	1-580-057-11	PIN, CONNECTOR 4P

< DIODE >

D001	8-719-404-46	DIODE	MA110
D002	8-719-404-46	DIODE	MA110
D004	8-719-404-19	DIODE	LN1251C (TALLY)

< IC >

IC001	8-759-084-53	IC	CXA1618AN-E2
IC002	8-749-923-29	IC	RS-20E-T

< JACK >

J001	1-691-737-11	JACK (SMALL TYPE)(EXT MIC)

< COIL >

L001	1-412-939-11	INDUCTOR 1uH
L002	1-412-939-11	INDUCTOR 1uH
L003	1-412-939-11	INDUCTOR 1uH

< TRANSISTOR >

Q001	8-729-230-63	TRANSISTOR	2SC4116-YG
Q003	8-729-402-42	TRANSISTOR	UN5213

< RESISTOR >

Ref. No.	Part No.	Description			Remark
R003	1-216-829-11	METAL CHIP	4.7K	5%	1/16W
R004	1-216-833-11	METAL CHIP	10K	5%	1/16W
R005	1-216-821-11	METAL CHIP	1K	5%	1/16W
R006	1-216-813-11	METAL CHIP	220	5%	1/16W
R007	1-216-834-11	METAL CHIP	12K	5%	1/16W
R008	1-216-834-11	METAL CHIP	12K	5%	1/16W
R009	1-216-835-11	METAL CHIP	15K	5%	1/16W
R010	1-216-833-11	METAL CHIP	10K	5%	1/16W
R011	1-216-825-11	METAL CHIP	2.2K	5%	1/16W
R012	1-216-839-11	METAL CHIP	33K	5%	1/16W
R013	1-216-831-11	METAL CHIP	6.8K	5%	1/16W
R014	1-216-831-11	METAL CHIP	6.8K	5%	1/16W
R015	1-216-839-11	METAL CHIP	33K	5%	1/16W
R016	1-216-833-11	METAL CHIP	10K	5%	1/16W
R017	1-216-835-11	METAL CHIP	15K	5%	1/16W
R018	1-216-834-11	METAL CHIP	12K	5%	1/16W
R019	1-216-834-11	METAL CHIP	12K	5%	1/16W
R020	1-216-825-11	METAL CHIP	2.2K	5%	1/16W
R022	1-216-829-11	METAL CHIP	4.7K	5%	1/16W
R023	1-216-833-11	METAL CHIP	10K	5%	1/16W
R024	1-216-821-11	METAL CHIP	1K	5%	1/16W
R025	1-216-864-11	METAL CHIP	0	5%	1/16W
R027	1-216-864-11	METAL CHIP	0	5%	1/16W
R036	1-216-864-11	METAL CHIP	0	5%	1/16W
R037	1-216-839-11	METAL CHIP	33K	5%	1/16W
R039	1-216-824-11	METAL CHIP	1.8K	5%	1/16W
R043	1-216-815-11	METAL CHIP	330	5%	1/16W

****

* A-7063-956-A MA-199 BOARD, COMPLETE
****
(TR42/TR70/TR82/TR550)
(Ref. No. 5,000 Series)

< CAPACITOR >

Ref. No.	Part No.	Description			Remark
C014	1-162-953-11	CERAMIC CHIP	100PF	5%	50V
C015	1-162-966-11	CERAMIC CHIP	0.0022uF	10%	50V
C032	1-164-346-11	CERAMIC CHIP	1uF		16V
C033	1-162-953-11	CERAMIC CHIP	100PF	5%	50V
C034	1-162-974-11	CERAMIC CHIP	0.01uF		50V
C035	1-162-587-11	CERAMIC CHIP	0.039uF	10%	25V
C036	1-164-004-11	CERAMIC CHIP	0.1uF	10%	25V
C037	1-164-346-11	CERAMIC CHIP	1uF		16V
C040	1-126-205-11	ELECT CHIP	47uF	20%	6.3V
C041	1-164-345-11	CERAMIC CHIP	0.082uF	10%	25V
C043	1-128-004-11	ELECT CHIP	10uF	20%	16V

< CONNECTOR >

CN001	1-691-487-21	CONNECTOR, FFC/FPC 8P
CN003	1-580-057-11	PIN, CONNECTOR 4P

< DIODE >

D001	8-719-404-49	DIODE	MA111
D002	8-719-404-49	DIODE	MA111
D004	8-719-404-19	DIODE	LN1251C (TALLY)

Ref. No.	Part No.	Description			Remark
C011	1-164-232-11	CERAMIC CHIP	0.01uF		50V
C012	1-163-037-11	CERAMIC CHIP	0.022uF	10%	25V
C013	1-162-953-11	CERAMIC CHIP	100PF	5%	50V
C014	1-162-953-11	CERAMIC CHIP	100PF	5%	50V
C015	1-162-966-11	CERAMIC CHIP	0.0022uF	10%	50V
C019	1-164-232-11	CERAMIC CHIP	0.01uF		50V
C020	1-163-037-11	CERAMIC CHIP	0.022uF	10%	25V
C021	1-126-205-11	ELECT CHIP	47uF	20%	6.3V
C022	1-164-004-11	CERAMIC CHIP	0.1uF	10%	25V
C023	1-165-031-21	TANTAL. CHIP	1uF	20%	16V
C024	1-163-037-11	CERAMIC CHIP	0.033uF	10%	25V
C025	1-163-023-00	CERAMIC CHIP	0.015uF	5%	50V
C026	1-163-037-11	CERAMIC CHIP	0.082uF	10%	25V
C027	1-163-037-11	CERAMIC CHIP	0.022uF	10%	25V
C030	1-164-348-11	CERAMIC CHIP	0.056uF	10%	25V
C048	1-128-004-11	ELECT CHIP	10uF	20%	16V
		< CONNECTOR >			
CN001	1-691-490-21	CONNECTOR, FFC/FPC 11P			
CN002	1-580-057-11	PIN, CONNECTOR 4P			
CN003	1-580-057-11	PIN, CONNECTOR 4P			
		< DIODE >			
D001	8-719-404-46	DIODE MA110			
D002	8-719-404-46	DIODE MA110			
D004	8-719-404-19	DIODE LN1251C (TALLY)			
		< IC >			
IC001	8-759-034-52	IC CXA1618AN-E2			
IC002	8-749-923-26	IC RS-5KB-T			
		< JACK >			
J001	1-691-787-11	JACK (SMALL TYPE)(EXT MIC)			
		< COIL >			
L001	1-412-030-11	INDUCTOR 1uH			
L002	1-412-030-11	INDUCTOR 1uH			
L003	1-412-030-11	INDUCTOR 1uH			
		< TRANSISTOR >			
Q001	8-729-214-63	TRANSISTOR 2SC4116-YG			
Q002	8-729-426-42	TRANSISTOR UN5213			
		< RESISTOR >			
R003	1-216-829-11	METAL CHIP	4.7K	5%	1/16W
R004	1-216-833-11	METAL CHIP	10K	5%	1/16W
R005	1-216-821-11	METAL CHIP	1K	5%	1/16W
R006	1-216-813-11	METAL CHIP	220	5%	1/16W
R007	1-216-834-11	METAL CHIP	12K	5%	1/16W
R008	1-216-834-11	METAL CHIP	12K	5%	1/16W
R009	1-216-835-11	METAL CHIP	15K	5%	1/16W
R010	1-216-833-11	METAL CHIP	10K	5%	1/16W
R011	1-216-825-11	METAL CHIP	2.2K	5%	1/16W
R012	1-216-839-11	METAL CHIP	33K	5%	1/16W
R013	1-216-831-11	METAL CHIP	6.8K	5%	1/16W
R014	1-216-831-11	METAL CHIP	6.8K	5%	1/16W
R015	1-216-839-11	METAL CHIP	33K	5%	1/16W
R016	1-216-833-11	METAL CHIP	10K	5%	1/16W
R017	1-216-835-11	METAL CHIP	15K	5%	1/16W
R018	1-216-834-11	METAL CHIP	12K	5%	1/16W
R019	1-216-834-11	METAL CHIP	12K	5%	1/16W
R020	1-216-825-11	METAL CHIP	2.2K	5%	1/16W
R022	1-216-829-11	METAL CHIP	4.7K	5%	1/16W
R023	1-216-833-11	METAL CHIP	10K	5%	1/16W
R024	1-216-821-11	METAL CHIP	1K	5%	1/16W
R025	1-216-864-11	METAL CHIP	0	5%	1/16W
R027	1-216-864-11	METAL CHIP	0	5%	1/16W
R030	1-216-864-11	METAL CHIP	0	5%	1/16W
R037	1-216-839-11	METAL CHIP	33K	5%	1/16W
R038	1-216-824-11	METAL CHIP	1.8K	5%	1/16W
R043	1-216-815-11	METAL CHIP	330	5%	1/16W

****

* A-7063-858-A MA-199 BOARD, COMPLETE
****

(TR42/TR70/TR82/TR650)
(Ref. No. 5,000 Series)

Ref. No.	Part No.	Description			Remark
		< CAPACITOR >			
C014	1-162-953-11	CERAMIC CHIP	100PF	5%	50V
C015	1-162-966-11	CERAMIC CHIP	0.0022uF	10%	50V
C032	1-164-346-11	CERAMIC CHIP	1uF		16V
C033	1-162-953-11	CERAMIC CHIP	100PF	5%	50V
C034	1-162-974-11	CERAMIC CHIP	0.01uF		50V
C035	1-163-037-11	CERAMIC CHIP	0.033uF	10%	25V
C036	1-164-004-11	CERAMIC CHIP	0.1uF	10%	25V
C037	1-164-346-11	CERAMIC CHIP	1uF		16V
C040	1-126-205-11	ELECT CHIP	47uF	20%	6.3V
C041	1-164-345-11	CERAMIC CHIP	0.082uF	10%	25V
C043	1-128-004-11	ELECT CHIP	10uF	20%	16V
		< CONNECTOR >			
CN001	1-691-487-21	CONNECTOR, FFC/FPC 8P			
CN003	1-580-057-11	PIN, CONNECTOR 4P			
		< DIODE >			
D001	8-719-404-49	DIODE MA111			
D002	8-719-404-49	DIODE MA111			
D004	8-719-404-19	DIODE LN1251C (TALLY)			

Ref. No.	Part No.	Description				Remark
		< IC >				
IC002	8-749-923-29	IC RS-20ET				
IC003	8-759-822-37	IC LA7293M-TE				
		< COIL >				
L002	1-412-939-11	INDUCTOR 1uH				
L003	1-412-939-11	INDUCTOR 1uH				
		< JACK >				
J001	1-568-027-11	JACK, SMALL TYPE 1P (EXT MIC)				
		< TRANSISTOR >				
Q002	8-729-402-63	TRANSISTOR 2SB1218A-Q				
		< RESISTOR >				
R027	1-216-864-11	METAL CHIP	0	5%	1/16W	
R028	1-216-820-11	METAL CHIP	820	5%	1/16W	
R029	1-216-823-11	METAL CHIP	1.5K	5%	1/16W	
R030	1-216-830-11	METAL CHIP	5.6K	5%	1/16W	
R031	1-216-838-11	METAL CHIP	27K	5%	1/16W	
R032	1-216-831-11	METAL CHIP	6.8K	5%	1/16W	
R033	1-216-838-11	METAL CHIP	27K	5%	1/16W	
R043	1-216-815-11	METAL CHIP	330	5%	1/16W	
R044	1-216-853-11	METAL CHIP	470K	5%	1/16W	

****

* A-7072-000-A SL-38 BOARD, COMPLETE

****

(Ref. No. 4,000 Series)

Ref. No.	Part No.	Description				Remark
		< CAPACITOR >				
C543	1-135-259-11	TANTAL. CHIP	10uF	20%	6.3V	
C544	1-135-211-11	TANTAL. CHIP	6.8uF	20%	6.3V	
C545	1-135-211-11	TANTAL. CHIP	6.8uF	20%	6.3V	
C546	1-164-232-11	CERAMIC CHIP	0.01uF		50V	
C547	1-164-232-11	CERAMIC CHIP	0.01uF		50V	
C551	1-164-232-11	CERAMIC CHIP	0.01uF		50V	
C553	1-164-361-11	CERAMIC CHIP	0.047uF		16V	
C554	1-135-215-21	TANTAL. CHIP	6.8uF	20%	16V	
C555	1-162-970-11	CERAMIC CHIP	0.01uF	10%	25V	
C556	1-162-974-11	CERAMIC CHIP	0.01uF		50V	
C557	1-135-149-21	TANTALUM CHIP	2.2uF	20%	10V	
C558	1-164-489-11	CERAMIC CHIP	0.22uF	10%	16V	
		< CONNECTOR >				
CN500	1-691-473-21	CONNECTOR, FFC/FPC 7P				
CN501	1-691-472-21	CONNECTOR, FFC/FPC 6P				
CN502	1-691-482-21	CONNECTOR, FFC/FPC 15P				
		< IC >				
IC507	8-759-165-47	IC MPC1780VFUEB				
		< COIL >				
L505	1-414-078-11	INDUCTOR 10uH				
		< TRANSISTOR >				
Q560	8-729-805-25	TRANSISTOR 2SB1121				
Q561	8-729-425-50	TRANSISTOR 2SB1462Q				
Q562	8-729-402-81	TRANSISTOR XN4501				
		< RESISTOR >				
R562	1-218-879-11	METAL CHIP	22K	0.50%	1/16W	
R563	1-218-879-11	METAL CHIP	22K	0.50%	1/16W	
R564	1-216-864-11	METAL CHIP	0	5%	1/16W	
R565	1-216-833-11	METAL CHIP	10K	5%	1/16W	
R566	1-218-857-11	METAL CHIP	2.7K	0.50%	1/16W	
R567	1-216-295-00	METAL CHIP	0	5%	1/10W	
R568	1-216-168-00	METAL GLAZE	56	5%	1/8W	
R569	1-218-879-11	METAL CHIP	22K	0.50%	1/16W	
R570	1-216-827-11	METAL CHIP	3.3K	5%	1/16W	
R571	1-218-879-11	METAL CHIP	22K	0.50%	1/16W	
R572	1-216-841-11	METAL CHIP	47K	5%	1/16W	
R590	1-216-833-11	METAL CHIP	10K	5%	1/16W	
R591	1-216-832-11	METAL CHIP	8.2K	5%	1/16W	
		< FLEXIBLE BOARD >				
W500	1-651-889-11	FP-48 FLEXIBLE BOARD				
W501	1-642-186-11	FP-437 FLEXIBLE BOARD				

****

Ref. No.	Part No.	Description				Remark
		< IC >				
IC003	8-749-921-09	IC HD-2UDY				
IC005	8-759-833-87	IC LA7288M-TE				
		< COIL >				
L002	1-412-838-11	INDUCTOR 1uH				
L005	1-412-839-11	INDUCTOR 1uH				
		< JACK >				
J001	1-568-027-11	JACK, SMALL TYPE 1P (EXT MIC)				
		< TRANSISTOR >				
Q002	8-729-402-63	TRANSISTOR 2SB1218A-Q				
		< RESISTOR >				
R027	1-216-864-11	METAL CHIP	0	5%	1/16W	
R028	1-216-820-11	METAL CHIP	820	5%	1/16W	
R029	1-216-823-11	METAL CHIP	1.5K	5%	1/16W	
R030	1-216-830-11	METAL CHIP	5.6K	5%	1/16W	
R031	1-216-838-11	METAL CHIP	27K	5%	1/16W	
R032	1-216-831-11	METAL CHIP	6.8K	5%	1/16W	
R033	1-216-838-11	METAL CHIP	27K	5%	1/16W	
R043	1-216-815-11	METAL CHIP	330	5%	1/16W	
R044	1-216-853-11	METAL CHIP	470K	5%	1/16W	

##

* A-7012-010-A SL-38 BOARD, COMPLETE
######################
(Ref. No. 4,000 Series)

Ref. No.	Part No.	Description				Remark
		< CAPACITOR >				
C543	1-135-259-11	TANTAL. CHIP	10uF	20%	6.3V	
C544	1-135-311-11	TANTAL. CHIP	4.7uF	20%	6.3V	
C545	1-135-311-11	TANTAL. CHIP	4.7uF	20%	6.3V	
C546	1-164-232-11	CERAMIC CHIP	0.01uF		50V	
C547	1-164-232-11	CERAMIC CHIP	0.01uF		50V	
C551	1-164-232-11	CERAMIC CHIP	0.01uF		50V	
C553	1-164-301-11	CERAMIC CHIP	0.047uF		16V	
C554	1-135-215-21	TANTAL. CHIP	6.8uF	20%	16V	
C555	1-162-970-11	CERAMIC CHIP	0.01uF	10%	25V	
C556	1-162-974-11	CERAMIC CHIP	0.01uF		50V	
C557	1-135-149-21	TANTALUM CHIP	2.2uF	20%	10V	
C558	1-164-489-11	CERAMIC CHIP	0.22uF	10%	16V	
		< CONNECTOR >				
CN500	1-691-473-21	CONNECTOR, FFC/FPC 7P				
CN501	1-691-472-21	CONNECTOR, FFC/FPC 6P				
CN502	1-691-482-21	CONNECTOR, FFC/FPC 15P				

Ref. No.	Part No.	Description				Remark
		< IC >				
IC507	8-759-165-47	IC MPC1780VFUEB				
		< COIL >				
L506	1-414-078-11	INDUCTOR 10uH				
		< TRANSISTOR >				
Q560	8-729-806-35	TRANSISTOR 2SB1121				
Q561	8-729-425-60	TRANSISTOR 2SB1462Q				
Q562	8-729-402-81	TRANSISTOR XN4501				
		< RESISTOR >				
R562	1-218-879-11	METAL CHIP	22K	0.50%	1/16W	
R563	1-218-879-11	METAL CHIP	22K	0.50%	1/16W	
R564	1-216-864-11	METAL CHIP	0	5%	1/16W	
R565	1-216-833-11	METAL CHIP	10K	5%	1/16W	
R566	1-218-857-11	METAL CHIP	2.7K	0.50%	1/16W	
R567	1-216-295-00	METAL CHIP	0	5%	1/10W	
R568	1-216-180-00	METAL GLAZE	56	5%	1/8W	
R569	1-218-879-11	METAL CHIP	22K	0.50%	1/16W	
R570	1-216-827-11	METAL CHIP	3.3K	5%	1/16W	
R571	1-218-878-11	METAL CHIP	33K	0.50%	1/16W	
R572	1-216-841-11	METAL CHIP	47K	5%	1/16W	
R590	1-216-833-11	METAL CHIP	10K	5%	1/16W	
R591	1-216-832-11	METAL CHIP	8.2K	5%	1/16W	
		< FLEXIBLE BOARD >				
W500	1-651-889-11	FP-48 FLEXIBLE BOARD				
W501	1-842-186-11	FP-427 FLEXIBLE BOARD				

##

Ref. No.	Part No.	Description			Remark
*	A-7063-961-A	VC-138 BOARD, COMPLETE (TR72/430)			
		**********			
*	A-7066-018-A	VC-138 BOARD, COMPLETE (TR80)			
		**********			
*	A-7066-080-A	VC-138 BOARD, COMPLETE (TR400/TR750)			
		**********			
*	A-7063-955-A	VC-145 BOARD, COMPLETE (TR82)			
		**********			
*	A-7066-007-A	VC-145 BOARD, COMPLETE (TR70)			
		**********			
*	A-7066-084-A	VC-145 BOARD, COMPLETE (TR42)			
		**********			
*	A-7066-088-A	VC-145 BOARD, COMPLETE (TR550)			
		**********			
		(Ref. No. 1,000 Series)			
		< CAPACITOR >			
C604	1-164-360-11	CERAMIC CHIP	0.1uF		16V
C605	1-135-181-21	TANTALUM CHIP	4.7uF	20%	6.3V
C606	1-135-259-11	TANTAL. CHIP	10uF	20%	6.3V
C607	1-162-974-11	CERAMIC CHIP	0.01uF		50V
C608	1-104-847-11	TANTAL. CHIP	22uF	20%	4V
		(TR42/TR72/TR82/TR430/TR550)			
C609	1-135-259-11	TANTAL. CHIP	10uF	20%	6.3V
C610	1-164-360-11	CERAMIC CHIP	0.1uF		16V
C611	1-164-360-11	CERAMIC CHIP	0.1uF		16V
		(TR42/TR72/TR82/TR430/TR550)			
C613	1-162-974-11	CERAMIC CHIP	0.01uF		50V
		(TR42/TR72/TR82/TR430/TR550)			
C614	1-162-974-11	CERAMIC CHIP	0.01uF		50V
		(TR42/TR72/TR82/TR430/TR550)			
C616	1-135-091-21	TANTAL. CHIP	1uF	20%	16V
C617	1-164-004-11	CERAMIC CHIP	0.1uF	10%	25V
C618	1-165-176-11	CERAMIC CHIP	0.047uF	10%	16V
C619	1-164-360-11	CERAMIC CHIP	0.1uF		16V
C620	1-164-360-11	CERAMIC CHIP	0.1uF		16V
C621	1-162-974-11	CERAMIC CHIP	0.01uF		50V
C622	1-164-360-11	CERAMIC CHIP	0.1uF		16V
C623	1-164-360-11	CERAMIC CHIP	0.1uF		16V
C624	1-162-974-11	CERAMIC CHIP	0.01uF		50V
C627	1-162-946-11	CERAMIC CHIP	27PF	5%	50V
C628	1-162-974-11	CERAMIC CHIP	0.01uF		50V
C629	1-162-974-11	CERAMIC CHIP	0.01uF		50V
C630	1-162-946-11	CERAMIC CHIP	27PF	5%	50V
C631	1-135-181-21	TANTALUM CHIP	4.7uF	20%	6.3V
C632	1-162-974-11	CERAMIC CHIP	0.01uF		50V
C633	1-162-946-11	CERAMIC CHIP	27PF	5%	50V
		(TR82/TR400/TR550/TR750)			
C633	1-162-947-11	CERAMIC CHIP	33PF	5%	50V
		(TR42/TR70/TR72/TR80/TR430)			
C634	1-135-181-21	TANTALUM CHIP	4.7uF	20%	6.3V
C635	1-135-259-11	TANTAL. CHIP	10uF	20%	6.3V
		(TR82/TR400/TR550/TR750)			
C636	1-164-360-11	CERAMIC CHIP	0.1uF		16V
		(TR82/TR400/TR550/TR750)			
C637	1-164-360-11	CERAMIC CHIP	0.1uF		16V
C638	1-162-974-11	CERAMIC CHIP	0.01uF		50V
C639	1-135-181-21	TANTALUM CHIP	4.7uF	20%	6.3V
C699	1-162-954-11	CERAMIC CHIP	120PF	5%	50V
		(TR82/TR400/TR550/TR750)			
C701	1-163-059-91	CERAMIC CHIP	0.01uF	10%	50V
C702	1-162-638-11	CERAMIC CHIP	1uF		16V
C703	1-164-360-11	CERAMIC CHIP	0.1uF		16V
C704	1-164-360-11	CERAMIC CHIP	0.1uF		16V
C705	1-135-145-11	TANTALUM CHIP	0.47uF	10%	35V
C706	1-164-360-11	CERAMIC CHIP	0.1uF		16V
C708	1-164-360-11	CERAMIC CHIP	0.1uF		16V
C709	1-135-214-21	TANTAL. CHIP	4.7uF	20%	20V
C710	1-162-971-11	CERAMIC CHIP	0.001uF		50V
C711	1-162-971-11	CERAMIC CHIP	0.001uF		50V
C712	1-164-360-11	CERAMIC CHIP	0.1uF		16V
C713	1-107-685-11	TANTAL. CHIP	15uF	20%	6.3V
C714	1-135-259-11	TANTAL. CHIP	10uF	20%	6.3V
C715	1-162-974-11	CERAMIC CHIP	0.01uF		50V
C716	1-164-360-11	CERAMIC CHIP	0.1uF		16V
C717	1-162-974-11	CERAMIC CHIP	0.01uF		50V
C718	1-162-637-11	CERAMIC CHIP	0.47uF		16V
C719	1-162-971-11	CERAMIC CHIP	0.001uF		50V
C720	1-162-974-11	CERAMIC CHIP	0.01uF		50V
C721	1-162-916-11	CERAMIC CHIP	12PF	5%	50V
C722	1-135-181-21	TANTALUM CHIP	4.7uF	20%	6.3V
C724	1-162-925-11	CERAMIC CHIP	68PF	5%	50V
		(TR42/TR70/TR72/TR80/TR430)			
C724	1-162-949-11	CERAMIC CHIP	47PF	5%	50V
		(TR82/TR400/TR550/TR750)			
C725	1-162-974-11	CERAMIC CHIP	0.01uF		50V
C726	1-135-259-11	TANTAL. CHIP	10uF	20%	6.3V
C727	1-162-974-11	CERAMIC CHIP	0.01uF		50V
C728	1-162-974-11	CERAMIC CHIP	0.01uF		50V
C729	1-162-974-11	CERAMIC CHIP	0.01uF		50V
C730	1-163-077-00	CERAMIC CHIP	0.1uF	10%	25V
		(TR82/TR400/TR550/TR750)			
C730	1-164-298-11	CERAMIC CHIP	0.15uF	10%	25V
		(TR42/TR70/TR72/TR80/TR430)			
C731	1-135-091-21	TANTAL. CHIP	1uF	20%	16V
C732	1-135-181-21	TANTALUM CHIP	4.7uF	20%	6.3V
C733	1-135-181-21	TANTALUM CHIP	4.7uF	20%	6.3V
C734	1-135-091-21	TANTAL. CHIP	1uF	20%	16V
C735	1-162-974-11	CERAMIC CHIP	0.01uF		50V
C737	1-162-946-11	CERAMIC CHIP	27PF	5%	50V

Ref.No.	Part No.	Description	Remark
*	A-7053-961-A	VC-138 BOARD, COMPLETE (TR72/430) **********	
*	A-7066-012-A	VC-138 BOARD, COMPLETE (TR60) **********	
*	A-7068-080-A	VC-138 BOARD, COMPLETE (TR400/TR750) **********	
*	A-7069-955-A	VC-145 BOARD, COMPLETE (TR82) **********	
*	A-7066-007-A	VC-145 BOARD, COMPLETE (TR70) **********	
*	A-7066-084-A	VC-145 BOARD, COMPLETE (TR43) **********	
*	A-7068-048-A	VC-145 BOARD, COMPLETE (TR550) **********	
			(Ref. No. 1,000 Series)
		< CAPACITOR >	
C804	1-164-360-11	CERAMIC CHIP 0.1uF	16V
C805	1-135-181-21	TANTALUM CHIP 4.7uF 20%	6.3V
C806	1-135-259-11	TANTAL. CHIP 10uF 20%	6.3V
C807	1-162-974-11	CERAMIC CHIP 0.01uF	50V
C808	1-104-847-11	TANTAL. CHIP 22uF 20%	4V
			(TR42/TR72/TR82/TR430/TR550)
C809	1-135-259-11	TANTAL. CHIP 10uF 20%	6.3V
C810	1-164-360-11	CERAMIC CHIP 0.1uF	16V
C811	1-164-360-11	CERAMIC CHIP 0.1uF	16V
			(TR42/TR72/TR82/TR430/TR550)
C813	1-162-974-11	CERAMIC CHIP 0.01uF	50V
			(TR42/TR72/TR82/TR430/TR550)
C814	1-162-974-11	CERAMIC CHIP 0.01uF	50V
			(TR42/TR72/TR82/TR430/TR550)
C816	1-135-091-21	TANTAL. CHIP 1uF 20%	16V
C817	1-164-004-11	CERAMIC CHIP 0.1uF 10%	25V
C818	1-165-176-11	CERAMIC CHIP 0.047uF 10%	16V
C819	1-164-360-11	CERAMIC CHIP 0.1uF	16V
C820	1-164-360-11	CERAMIC CHIP 0.1uF	16V
C821	1-162-974-11	CERAMIC CHIP 0.01uF	50V
C822	1-164-180-11	CERAMIC CHIP 0.1uF	16V
C823	1-164-180-11	CERAMIC CHIP 0.1uF	16V
C824	1-162-974-11	CERAMIC CHIP 0.01uF	50V
C827	1-162-946-11	CERAMIC CHIP 27PF 5%	50V
C828	1-162-974-11	CERAMIC CHIP 0.01uF	50V
C829	1-162-974-11	CERAMIC CHIP 0.01uF	50V
C830	1-162-946-11	CERAMIC CHIP 27PF 5%	50V
C831	1-135-181-21	TANTALUM CHIP 4.7uF 20%	6.3V
C832	1-162-974-11	CERAMIC CHIP 0.01uF	50V
C833	1-162-946-11	CERAMIC CHIP 27PF 5%	50V
			(TR82/TR400/TR550/TR750)

Ref.No.	Part No.	Description	Remark
C833	1-162-947-11	CERAMIC CHIP 33PF 5%	50V
			(TR42/TR70/TR72/TR80/TR430)
C834	1-135-181-21	TANTALUM CHIP 4.7uF 20%	6.3V
C835	1-135-259-11	TANTAL. CHIP 10uF 20%	6.3V
			(TR82/TR400/TR550/TR750)
C836	1-164-360-11	CERAMIC CHIP 0.1uF	16V
			(TR82/TR400/TR550/TR750)
C837	1-164-360-11	CERAMIC CHIP 0.1uF	16V
C838	1-162-974-11	CERAMIC CHIP 0.01uF	50V
C839	1-135-181-21	TANTALUM CHIP 4.7uF 20%	6.3V
C899	1-162-954-11	CERAMIC CHIP 150PF 5%	50V
			(TR82/TR400/TR550/TR750)
C701	1-163-038-91	CERAMIC CHIP 0.01uF 10%	50V
C702	1-162-838-11	CERAMIC CHIP 1uF	16V
C703	1-164-360-11	CERAMIC CHIP 0.1uF	16V
C704	1-164-360-11	CERAMIC CHIP 0.1uF	16V
C705	1-135-145-11	TANTALUM CHIP 0.47uF 10%	35V
C706	1-164-360-11	CERAMIC CHIP 0.1uF	16V
C708	1-164-360-11	CERAMIC CHIP 0.1uF	16V
C709	1-135-214-21	TANTAL. CHIP 4.7uF 20%	25V
C710	1-162-971-11	CERAMIC CHIP 0.001uF	50V
C711	1-162-971-11	CERAMIC CHIP 0.001uF	50V
C712	1-164-363-11	CERAMIC CHIP 0.1uF	16V
C713	1-107-885-11	TANTAL. CHIP 15uF 20%	6.3V
C714	1-135-259-11	TANTAL. CHIP 10uF 20%	6.3V
C715	1-162-974-11	CERAMIC CHIP 0.01uF	50V
C716	1-164-360-11	CERAMIC CHIP 0.1uF	16V
C717	1-162-974-11	CERAMIC CHIP 0.01uF	50V
C718	1-163-037-11	CERAMIC CHIP 0.47uF	16V
C719	1-162-971-11	CERAMIC CHIP 0.001uF	50V
C720	1-162-974-11	CERAMIC CHIP 0.01uF	50V
C721	1-162-916-11	CERAMIC CHIP 12PF 5%	50V
C722	1-135-181-21	TANTALUM CHIP 4.7uF 20%	6.3V
C724	1-162-925-11	CERAMIC CHIP 68PF 5%	50V
			(TR42/TR70/TR72/TR80/TR430)
C724	1-162-949-11	CERAMIC CHIP 47PF 5%	50V
			(TR82/TR400/TR550/TR750)
C725	1-162-974-11	CERAMIC CHIP 0.01uF	50V
C726	1-135-259-11	TANTAL. CHIP 10uF 20%	6.3V
C727	1-162-974-11	CERAMIC CHIP 0.01uF	50V
C728	1-162-974-11	CERAMIC CHIP 0.01uF	50V
C729	1-162-974-11	CERAMIC CHIP 0.01uF	50V
C730	1-163-077-00	CERAMIC CHIP 0.1uF 10%	25V
			(TR82/TR400/TR550/TR750)
C730	1-164-298-11	CERAMIC CHIP 0.15uF 10%	25V
			(TR42/TR70/TR72/TR80/TR430)
C731	1-135-091-21	TANTAL. CHIP 1uF 20%	16V
C732	1-135-181-21	TANTALUM CHIP 4.7uF 20%	6.3V
C733	1-135-181-21	TANTALUM CHIP 4.7uF 20%	6.3V
C734	1-135-091-21	TANTAL. CHIP 1uF 20%	16V
C735	1-162-974-11	CERAMIC CHIP 0.01uF	50V
C737	1-162-946-11	CERAMIC CHIP 27PF 5%	50V

Ref. No.	Part No.	Description	Remark
C739	1-135-181-21	TANTALUM CHIP 4.7uF 20% 6.3V	
C741	1-135-181-21	TANTALUM CHIP 4.7uF 20% 6.3V	
C742	1-164-360-11	CERAMIC CHIP 0.1uF 16V	
C743	1-162-974-11	CERAMIC CHIP 0.01uF 50V	
C744	1-162-974-11	CERAMIC CHIP 0.01uF 50V	
C745	1-162-974-11	CERAMIC CHIP 0.01uF 50V	
C746	1-164-360-11	CERAMIC CHIP 0.1uF 16V	
C747	1-164-360-11	CERAMIC CHIP 0.1uF 16V	
C748	1-164-360-11	CERAMIC CHIP 0.1uF 16V	
C749	1-135-181-21	TANTALUM CHIP 4.7uF 20% 6.3V	
C750	1-162-971-11	CERAMIC CHIP 0.001uF 50V	
C751	1-164-004-11	CERAMIC CHIP 0.1uF 10% 25V	
C752	1-162-971-11	CERAMIC CHIP 0.001uF 50V	
C753	1-162-974-11	CERAMIC CHIP 0.01uF 50V	
C754	1-162-974-11	CERAMIC CHIP 0.01uF 50V	
C755	1-162-974-11	CERAMIC CHIP 0.01uF 50V	
C756	1-104-752-11	TANTAL. CHIP 33uF 20% 6.3V	
C757	1-162-974-11	CERAMIC CHIP 0.01uF 50V	
C771	1-164-245-11	CERAMIC CHIP 0.015uF 10% 25V	(TR82/TR400/TR550/TR750)
C772	1-164-004-11	CERAMIC CHIP 0.1uF 10% 25V	(TR82/TR400/TR550/TR750)
C773	1-164-299-11	CERAMIC CHIP 0.22uF 10% 25V	(TR82/TR400/TR550/TR750)
C774	1-128-257-21	ELECT CHIP 33uF 20% 10V	(TR82/TR400/TR550/TR750)
C775	1-128-257-21	ELECT CHIP 33uF 20% 10V	(TR82/TR400/TR550/TR750)
C776	1-162-953-11	CERAMIC CHIP 100PF 5% 50V	(TR82/TR400/TR550/TR750)
C777	1-162-568-11	CERAMIC CHIP 0.33uF 10% 16V	(TR82/TR400/TR550/TR750)
C778	1-162-953-11	CERAMIC CHIP 100PF 5% 50V	(TR82/TR400/TR550/TR750)
C779	1-162-568-11	CERAMIC CHIP 0.33uF 10% 16V	(TR82/TR400/TR550/TR750)
C780	1-164-360-11	CERAMIC CHIP 0.1uF 16V	(TR82/TR400/TR550/TR750)
C781	1-162-974-11	CERAMIC CHIP 0.01uF 50V	(TR82/TR400/TR550/TR750)
C782	1-135-259-11	TANTAL. CHIP 10uF 20% 6.3V	(TR82/TR400/TR550/TR750)
C783	1-135-259-11	TANTAL. CHIP 10uF 20% 6.3V	(TR82/TR400/TR550/TR750)
C784	1-162-974-11	CERAMIC CHIP 0.01uF 50V	(TR82/TR400/TR550/TR750)
C785	1-162-974-11	CERAMIC CHIP 0.01uF 50V	(TR82/TR400/TR550/TR750)
C786	1-135-259-11	TANTAL. CHIP 10uF 20% 6.3V	(TR82/TR400/TR550/TR750)
C788	1-164-004-11	CERAMIC CHIP 0.1uF 10% 25V	(TR82/TR400/TR550/TR750)
C789	1-164-245-11	CERAMIC CHIP 0.015uF 10% 25V	(TR82/TR400/TR550/TR750)
C790	1-164-299-11	CERAMIC CHIP 0.22uF 10% 25V	(TR82/TR400/TR550/TR750)
C793	1-135-259-11	TANTAL. CHIP 10uF 20% 6.3V	(TR82/TR400/TR550/TR750)
C794	1-164-360-11	CERAMIC CHIP 0.1uF 16V	(TR82/TR400/TR550/TR750)
		< CONNECTOR >	
* CN601	1-764-395-21	CONNECTOR, BOARD TO BOARD 42P	
CN701	1-750-630-11	CONNECTOR, FFC/FPC (ZIF) 16P	
* CN751	1-764-528-11	CONNECTOR, FFC/FPC (ZIF) 21P	
CN775	1-691-487-21	CONNECTOR, FFC/FPC 8P	(TR82/TR400/TR550/TR750)
		< TRIMMER >	
CT701	1-141-356-11	CAP, ADJ	
		< DIODE >	
D701	8-719-404-49	DIODE MA111	
D702	8-719-404-49	DIODE MA111	
D703	8-719-404-49	DIODE MA111	
D705	8-719-404-49	DIODE MA111	
		< FILTER >	
FL601	1-239-352-11	FILTER, LOW PASS	(TR82/TR400/TR550/TR750)
FL601	1-239-766-11	FILTER, LOW PASS	(TR42/TR70/TR72/TR80/TR430)
		< IC >	
IC601	8-759-044-78	IC AK6420F-E1	
IC602	8-759-260-67	IC SC424608MC68HC11MA8FU	(TR42/TR70/TR72/TR80/TR82/TR430)
IC602	8-759-277-18	IC SC424609MC68HC11MA8FU	(TR400/TR550/TR750)
IC603	8-759-064-36	IC MB88346BPFV	
IC604	8-759-710-29	IC NJM2235M	(TR42/TR72/TR82/TR430/TR550)
IC609	8-752-365-71	IC CXD2150R	(TR42/TR70/TR72/TR80/TR82/TR430)
IC609	8-752-369-24	IC CXD2150AR	(TR400/TR550/TR750)
IC610	8-752-365-72	IC CXD2151R	
IC611	8-759-262-36	IC CXD2133BR	
IC613	8-759-247-06	IC CXD2152REL	(TR82/TR400/TR550/TR750)
IC614	8-759-255-09	IC uPD6461GS-802-GLG-E2	
IC701	8-752-355-07	IC CXD1267N	
IC702	8-752-365-73	IC CXD2405R	(TR82/TR400/TR550/TR750)
IC702	8-752-365-74	IC CXD1266R	(TR42/TR70/TR72/TR80/TR430)
IC703	8-752-069-21	IC CXA1690Q	
IC704	8-759-173-24	IC AD875JST-REEL	(TR70/TR72/TR80/TR430)

Ref. No.	Part No.	Description				Remark
C739	1-135-181-21	TANTALUM CHIP	4.7uF	20%	6.3V	
C741	1-135-181-21	TANTALUM CHIP	4.7uF	20%	6.3V	
C742	1-164-360-11	CERAMIC CHIP	0.1uF		16V	
C743	1-162-974-11	CERAMIC CHIP	0.01uF		50V	
C744	1-162-974-11	CERAMIC CHIP	0.01uF		50V	
C745	1-162-974-11	CERAMIC CHIP	0.01uF		50V	
C746	1-164-360-11	CERAMIC CHIP	0.1uF		16V	
C747	1-164-360-11	CERAMIC CHIP	0.1uF		16V	
C748	1-164-360-11	CERAMIC CHIP	0.1uF		16V	
C749	1-135-181-21	TANTALUM CHIP	4.7uF	20%	6.3V	
C750	1-162-971-11	CERAMIC CHIP	0.001uF		50V	
C751	1-164-004-11	CERAMIC CHIP	0.1uF	10%	25V	
C752	1-162-971-11	CERAMIC CHIP	0.001uF		50V	
C753	1-162-974-11	CERAMIC CHIP	0.01uF		50V	
C754	1-162-974-11	CERAMIC CHIP	0.01uF		50V	
C755	1-162-974-11	CERAMIC CHIP	0.01uF		50V	
C756	1-104-752-11	TANTAL. CHIP	33uF	20%	6.3V	
C757	1-162-974-11	CERAMIC CHIP	0.01uF		50V	
C771	1-164-245-11	CERAMIC CHIP	0.015uF	10%	25V	
			(TR82/TR400/TR550/TR750)			
C772	1-164-004-11	CERAMIC CHIP	0.1uF	10%	25V	
			(TR82/TR400/TR550/TR750)			
C773	1-164-299-11	CERAMIC CHIP	0.22uF	10%	25V	
			(TR82/TR400/TR550/TR750)			
C774	1-128-257-21	ELECT CHIP	33uF	20%	10V	
			(TR82/TR400/TR550/TR750)			
C775	1-128-257-21	ELECT CHIP	33uF	20%	10V	
			(TR82/TR400/TR550/TR750)			
C776	1-162-953-11	CERAMIC CHIP	100PF	5%	50V	
			(TR82/TR400/TR550/TR750)			
C777	1-162-948-11	CERAMIC CHIP	0.33uF	10%	16V	
			(TR82/TR400/TR550/TR750)			
C778	1-162-953-11	CERAMIC CHIP	100PF	5%	50V	
			(TR82/TR400/TR550/TR750)			
C779	1-162-948-11	CERAMIC CHIP	0.33uF	10%	16V	
			(TR82/TR400/TR550/TR750)			
C780	1-164-360-11	CERAMIC CHIP	0.1uF		16V	
			(TR82/TR400/TR550/TR750)			
C781	1-162-974-11	CERAMIC CHIP	0.01uF		50V	
			(TR82/TR400/TR550/TR750)			
C783	1-135-259-11	TANTAL. CHIP	10uF	20%	6.3V	
			(TR82/TR400/TR550/TR750)			
C788	1-135-259-11	TANTAL. CHIP	10uF	20%	6.3V	
			(TR82/TR400/TR550/TR750)			
C784	1-162-974-11	CERAMIC CHIP	0.01uF		50V	
			(TR82/TR400/TR550/TR750)			
C785	1-162-974-11	CERAMIC CHIP	0.01uF		50V	
			(TR82/TR400/TR550/TR750)			
C786	1-135-259-11	TANTAL. CHIP	10uF	20%	6.3V	
			(TR82/TR400/TR550/TR750)			
C788	1-164-004-11	CERAMIC CHIP	0.1uF	10%	25V	
			(TR82/TR400/TR550/TR750)			

Ref. No.	Part No.	Description				Remark
C789	1-164-245-11	CERAMIC CHIP			0.015uF	10% 25V
						(TR82/TR400/TR550/TR750)
C790	1-164-299-11	CERAMIC CHIP			0.22uF	10% 25V
						(TR82/TR400/TR550/TR750)
C793	1-135-259-11	TANTAL. CHIP			10uF	20% 6.3V
						(TR82/TR400/TR550/TR750)
C794	1-164-360-11	CERAMIC CHIP			0.1uF	16V
						(TR82/TR400/TR550/TR750)
		< CONNECTOR >				
* CN821	1-764-395-21	CONNECTOR, BOARD TO BOARD 42P				
CN721	1-750-680-11	CONNECTOR, FPC/FFC (ZIF) 16P				
* CN751	1-764-532-11	CONNECTOR, FPC/FFC (ZIF) 21P				
CN775	1-691-487-21	CONNECTOR, FPC/FFC 8P				
						(TR82/TR400/TR550/TR750)
		< TRIMMER >				
CT701	1-141-356-11	CAP, ADJ				
		< DIODE >				
D701	8-719-404-49	DIODE	MA111			
D702	8-719-404-49	DIODE	MA111			
D703	8-719-404-49	DIODE	MA111			
D705	8-719-404-49	DIODE	MA111			
		< FILTER >				
FL801	1-239-552-11	FILTER, LOW PASS				
						(TR82/TR400/TR550/TR750)
FL801	1-239-766-11	FILTER, LOW PASS				
						(TR42/TR70/TR72/TR80/TR430)
		< IC >				
IC801	8-759-044-78	IC	AN8425P-E1			
IC802	8-759-260-67	IC	SC4E4608MC88HC11MA8PU			
						(TR42/TR70/TR72/TR80/TR82/TR430)
IC802	8-759-277-18	IC	SC4E4608MC88HC11MA8PU			
						(TR400/TR550/TR750)
IC803	8-759-064-36	IC	MB88346PFV			
IC804	8-759-710-29	IC	HJM2236M(TR42/TR72/TR82/TR430/TR550)			
IC806	8-752-965-71	IC	CXD2150R			
						(TR42/TR70/TR72/TR80/TR82/TR430)
IC809	8-752-369-84	IC	CXD2150AR (TR400/TR550/TR750)			
IC810	8-752-365-72	IC	CXD2151R			
IC811	8-759-382-98	IC	CXD2138R			
IC813	8-759-247-06	IC	CXD1152BEL (TR82/TR400/TR550/TR750)			
IC814	8-759-255-09	IC	uPD6481GS-802-GAG-E2			
IC701	8-752-325-07	IC	CXD1267N			
IC702	8-752-365-73	IC	CXD2405R (TR82/TR400/TR550/TR750)			
IC703	8-752-365-74	IC	CXD1266R (TR42/TR70/TR72/TR80/TR430)			
IC705	8-752-089-21	IC	CXA1690Q			
IC704	8-759-173-24	IC	AD676JST-REEL (TR70/TR72/TR80/TR430)			

Ref. No.	Part No.	Description	Remark
IC704	8-759-263-29	IC HD49315FEB	(TR42/TR82/TR400/TR550/TR750)
IC705	8-752-365-76	IC CXD2407R	
IC751	8-759-701-24	IC NJM3414M	
IC752	8-759-058-52	IC XRA10324AF	
IC753	8-752-365-65	IC CXD2126N	
IC754	8-759-247-07	IC MPC17A34VMEL	
IC755	8-759-031-58	IC SC7SU04F	
IC772	8-759-234-77	IC TC4S66F	(TR82/TR400/TR550/TR750)
IC773	8-759-234-77	IC TC4S66F	(TR82/TR400/TR550/TR750)
IC774	8-759-058-45	IC NJM3403AV(TE2)	(TR82/TR400/TR550/TR750)
IC775	8-759-080-34	IC TA75W01FU-TE12R	(TR82/TR400/TR550/TR750)
IC776	8-759-248-78	IC MB88102PFV-G-BND-ER	(TR82/TR400/TR550/TR750)
IC777	8-752-850-54	IC CXP87132-010R	(TR82/TR400/TR550/TR750)
		< COIL >	
L601	1-412-058-11	INDUCTOR CHIP 10uH	
L602	1-414-078-11	INDUCTOR 10uH	
L603	1-412-058-11	INDUCTOR CHIP 10uH	
L604	1-414-078-11	INDUCTOR 10uH	
L605	1-410-391-11	INDUCTOR CHIP 68uH	
L606	1-414-078-11	INDUCTOR 10uH	
L607	1-414-078-11	INDUCTOR 10uH	(TR82/TR400/TR550/TR750)
L608	1-412-006-31	INDUCTOR CHIP 10uH	
L609	1-412-979-21	INDUCTOR 1uH	
L610	1-412-979-21	INDUCTOR 1uH	
L611	1-412-052-21	INDUCTOR CHIP 1uH	
L612	1-412-052-21	INDUCTOR CHIP 1uH	
L613	1-412-052-21	INDUCTOR CHIP 1uH	
L614	1-412-052-21	INDUCTOR CHIP 1uH	
L702	1-412-058-11	INDUCTOR CHIP 10uH	
L703	1-412-058-11	INDUCTOR CHIP 10uH	
L704	1-412-058-11	INDUCTOR CHIP 10uH	
L705	1-412-058-11	INDUCTOR CHIP 10uH	
L706	1-412-058-11	INDUCTOR CHIP 10uH	
L751	1-412-062-11	INDUCTOR CHIP 47uH	
L752	1-412-058-11	INDUCTOR CHIP 10uH	
L753	1-412-058-11	INDUCTOR CHIP 10uH	
L775	1-412-058-11	INDUCTOR CHIP 10uH	(TR82/TR400/TR550/TR750)
L777	1-414-078-11	INDUCTOR 10uH	(TR82/TR400/TR550/TR750)
L778	1-414-078-11	INDUCTOR 10uH	(TR82/TR400/TR550/TR750)
		< TRANSISTOR >	
Q604	8-729-010-60	TRANSISTOR MSA1586	
Q605	8-729-010-60	TRANSISTOR MSA1586	
Q606	8-729-010-75	TRANSISTOR MSC4116	
Q607	8-729-010-75	TRANSISTOR MSC4116	

Ref. No.	Part No.	Description	Remark
Q701	8-729-403-27	TRANSISTOR XN4401	
Q751	8-729-010-75	TRANSISTOR MSC4116	
Q752	8-729-015-76	TRANSISTOR UN5211	
		< RESISTOR >	
R601	1-216-851-11	METAL CHIP 330K 5% 1/16W	
R602	1-216-833-11	METAL CHIP 10K 5% 1/16W	
R603	1-216-857-11	METAL CHIP 1M 5% 1/16W	
R604	1-216-833-11	METAL CHIP 10K 5% 1/16W	
R605	1-216-864-11	METAL CHIP 0 5% 1/16W	
R606	1-216-847-11	METAL CHIP 150K 5% 1/16W	(TR42/TR72/TR82/TR430/TR550)
R607	1-216-839-11	METAL CHIP 33K 5% 1/16W	(TR42/TR72/TR82/TR430/TR550)
R608	1-216-864-11	METAL CHIP 0 5% 1/16W	
R609	1-216-838-11	METAL CHIP 27K 5% 1/16W	(TR42/TR72/TR82/TR430/TR550)
R610	1-216-839-11	METAL CHIP 33K 5% 1/16W	(TR42/TR72/TR82/TR430/TR550)
R611	1-216-838-11	METAL CHIP 27K 5% 1/16W	(TR42/TR72/TR82/TR430/TR550)
R612	1-216-825-11	METAL CHIP 2.2K 5% 1/16W	
R613	1-216-825-11	METAL CHIP 2.2K 5% 1/16W	
R614	1-216-825-11	METAL CHIP 2.2K 5% 1/16W	(TR70/TR80/TR400/TR750)
R615	1-216-825-11	METAL CHIP 2.2K 5% 1/16W	(TR70/TR80/TR400/TR750)
R616	1-216-864-11	METAL CHIP 0 5% 1/16W (TR82)	
R619	1-216-803-11	METAL CHIP 33 5% 1/16W	
R620	1-216-841-11	METAL CHIP 47K 5% 1/16W	
R621	1-216-841-11	METAL CHIP 47K 5% 1/16W	
R622	1-216-864-11	METAL CHIP 0 5% 1/16W	(TR70/TR80/TR400/TR750)
R624	1-216-864-11	METAL CHIP 0 5% 1/16W	(TR42/TR70/TR72/TR80/TR400/TR430/TR550/TR750)
R626	1-216-841-11	METAL CHIP 47K 5% 1/16W	
R627	1-216-841-11	METAL CHIP 47K 5% 1/16W	
R628	1-216-834-11	METAL CHIP 12K 5% 1/16W	(TR400/TR550/TR750)
R629	1-216-832-11	METAL CHIP 8.2K 5% 1/16W	(TR400/TR550/TR750)
R629	1-216-841-11	METAL CHIP 47K 5% 1/16W	(TR42/TR70/TR72/TR80/TR82/TR430)
R630	1-216-833-11	METAL CHIP 10K 5% 1/16W	
R631	1-216-864-11	METAL CHIP 0 5% 1/16W	
R634	1-216-821-11	METAL CHIP 1K 5% 1/16W	
R635	1-216-825-11	METAL CHIP 2.2K 5% 1/16W	
R636	1-216-845-11	METAL CHIP 100K 5% 1/16W	
R637	1-216-837-11	METAL CHIP 22K 5% 1/16W	
R638	1-216-839-11	METAL CHIP 33K 5% 1/16W	
R639	1-216-864-11	METAL CHIP 0 5% 1/16W	
R640	1-216-815-11	METAL CHIP 330 5% 1/16W	

Ref. No.	Part No.	Description	Remark
IC704	8-759-883-29	IC KM48315EEB	(TR42/TR72/TR400/TR550/TR750)
IC706	8-759-866-76	IC CXD2407R	
IC761	8-759-701-24	IC HJM3414M	
IC762	8-759-068-52	IC XRA1032AAP	
IC753	8-758-385-85	IC CXD3128R	
IC754	8-759-247-07	IC MPC17A04FWEL	
IC765	8-759-081-68	IC SC7SU04F	
IC772	8-759-284-77	IC TC4S66F	(TR42/TR400/TR550/TR750)
IC773	8-759-284-77	IC TC4S66F	(TR42/TR400/TR550/TR750)
IC774	8-759-068-45	IC HJM3403AF	(TR42) (TR42/TR400/TR550/TR750)
IC775	8-759-080-34	IC TA75W01FU-TE12R	(TR42/TR400/TR550/TR750)
IC776	8-759-248-78	IC MB81C1027PFV-G-BND-ER	(TR42/TR400/TR550/TR750)
IC777	8-759-850-54	IC CXP81188-010R	(TR42/TR400/TR550/TR750)
		< COIL >	
L601	1-412-058-11	INDUCTOR CHIP 10uH	
L602	1-414-078-11	INDUCTOR 10uH	
L603	1-412-058-11	INDUCTOR CHIP 10uH	
L604	1-414-078-11	INDUCTOR 10uH	
L605	1-410-991-11	INDUCTOR CHIP 68uH	
L606	1-414-078-11	INDUCTOR 10uH	
L607	1-414-078-11	INDUCTOR 10uH	(TR42/TR400/TR550/TR750)
L608	1-412-058-81	INDUCTOR CHIP 10uH	
L608	1-412-078-21	INDUCTOR 1uH	
L610	1-412-078-21	INDUCTOR 1uH	
L611	1-412-063-21	INDUCTOR CHIP 1uH	
L612	1-412-063-21	INDUCTOR CHIP 1uH	
L613	1-412-063-21	INDUCTOR CHIP 1uH	
L614	1-412-063-21	INDUCTOR CHIP 1uH	
L702	1-412-068-11	INDUCTOR CHIP 10uH	
L703	1-412-068-11	INDUCTOR CHIP 10uH	
L704	1-412-068-11	INDUCTOR CHIP 10uH	
L705	1-412-068-11	INDUCTOR CHIP 10uH	
L706	1-412-068-11	INDUCTOR CHIP 10uH	
L761	1-412-062-11	INDUCTOR CHIP 47uH	
L762	1-412-058-11	INDUCTOR CHIP 10uH	
L763	1-412-058-11	INDUCTOR CHIP 10uH	
L775	1-412-058-11	INDUCTOR CHIP 10uH	(TR42/TR400/TR550/TR750)
L777	1-414-078-11	INDUCTOR 10uH	(TR42/TR400/TR550/TR750)
L778	1-414-078-11	INDUCTOR 10uH	(TR42/TR400/TR550/TR750)
		< TRANSISTOR >	
Q804	8-729-010-60	TRANSISTOR MSA1586	
Q805	8-729-010-60	TRANSISTOR MSA1586	
Q806	8-729-010-76	TRANSISTOR MSC4116	
Q807	8-729-010-76	TRANSISTOR MSC4116	

Ref. No.	Part No.	Description	Remark
Q701	8-729-403-27	TRANSISTOR XN4401	
Q751	8-729-010-75	TRANSISTOR MSC4116	
Q752	8-729-015-78	TRANSISTOR UN5211	
		< RESISTOR >	
R601	1-216-851-11	METAL CHIP 330K 5% 1/16W	
R602	1-216-888-11	METAL CHIP 10K 5% 1/16W	
R603	1-216-857-11	METAL CHIP 1M 5% 1/16W	
R604	1-216-889-11	METAL CHIP 10K 5% 1/16W	
R605	1-216-864-11	METAL CHIP 0 5% 1/16W	
R606	1-216-847-11	METAL CHIP 150K 5% 1/16W	(TR42/TR72/TR82/TR430/TR550)
R607	1-218-839-11	METAL CHIP 33K 5% 1/16W	(TR42/TR72/TR82/TR430/TR550)
R608	1-216-864-11	METAL CHIP 0 5% 1/16W	
R609	1-216-838-11	METAL CHIP 27K 5% 1/16W	(TR42/TR72/TR82/TR430/TR550)
R610	1-218-839-11	METAL CHIP 33K 5% 1/16W	(TR42/TR72/TR82/TR430/TR550)
R611	1-216-838-11	METAL CHIP 27K 5% 1/16W	(TR42/TR72/TR82/TR430/TR550)
R612	1-216-835-11	METAL CHIP 2.2K 5% 1/16W	
R613	1-216-835-11	METAL CHIP 2.2K 5% 1/16W	
R614	1-216-835-11	METAL CHIP 2.2K 5% 1/16W	(TR70/TR80/TR400/TR750)
R615	1-216-835-11	METAL CHIP 2.2K 5% 1/16W	(TR70/TR80/TR400/TR750)
R616	1-216-864-11	METAL CHIP 0 5% 1/16W (TR82)	
R619	1-216-809-11	METAL CHIP 83 5% 1/16W	
R620	1-216-841-11	METAL CHIP 47K 5% 1/16W	
R621	1-216-841-11	METAL CHIP 47K 5% 1/16W	
R622	1-216-864-11	METAL CHIP 0 5% 1/16W	(TR70/TR80/TR400/TR750)
R624	1-216-854-11	METAL CHIP 0 5% 1/16W	(TR42/TR70/TR72/TR80/TR400/TR550/TR750)
R625	1-216-841-11	METAL CHIP 47K 5% 1/16W	
R627	1-216-841-11	METAL CHIP 47K 5% 1/16W	
R628	1-216-824-11	METAL CHIP 12K 5% 1/16W	(TR400/TR550/TR750)
R629	1-216-835-11	METAL CHIP 2.2K 5% 1/16W	(TR400/TR550/TR750)
R629	1-216-841-11	METAL CHIP 47K 5% 1/16W	(TR42/TR70/TR72/TR80/TR82/TR430)
R630	1-216-833-11	METAL CHIP 10K 5% 1/16W	
R631	1-216-864-11	METAL CHIP 0 5% 1/16W	
R634	1-216-821-11	METAL CHIP 1K 5% 1/16W	
R635	1-216-835-11	METAL CHIP 2.2K 5% 1/16W	
R636	1-216-845-11	METAL CHIP 100K 5% 1/16W	
R637	1-216-837-11	METAL CHIP 22K 5% 1/16W	
R638	1-216-839-11	METAL CHIP 33K 5% 1/16W	
R639	1-216-864-11	METAL CHIP 0 5% 1/16W	
R640	1-216-815-11	METAL CHIP 330 5% 1/16W	

Ref. No.	Part No.	Description				Remark
R643	1-216-833-11	METAL CHIP	10K	5%	1/16W	
R645	1-216-834-11	METAL CHIP	12K	5%	1/16W	
R646	1-216-818-11	METAL CHIP	560	5%	1/16W	
R647	1-216-834-11	METAL CHIP	12K	5%	1/16W	
R648	1-216-818-11	METAL CHIP	560	5%	1/16W	
R649	1-216-841-11	METAL CHIP	47K	5%	1/16W	
R650	1-216-827-11	METAL CHIP	3.3K	5%	1/16W	
R651	1-216-827-11	METAL CHIP	3.3K	5%	1/16W	
R652	1-216-841-11	METAL CHIP	47K	5%	1/16W	
R653	1-216-864-11	METAL CHIP	0	5%	1/16W	
R656	1-216-864-11	METAL CHIP	0	5%	1/16W	(TR42/TR70/TR72/TR80/TR430)
R657	1-216-864-11	METAL CHIP	0	5%	1/16W	(TR82/TR400/TR550/TR750)
R658	1-216-864-11	METAL CHIP	0	5%	1/16W	
R659	1-216-823-11	METAL CHIP	1.5K	5%	1/16W	
R661	1-216-841-11	METAL CHIP	47K	5%	1/16W	
R662	1-216-821-11	METAL CHIP	1K	5%	1/16W	
R663	1-216-825-11	METAL CHIP	2.2K	5%	1/16W	
R664	1-216-821-11	METAL CHIP	1K	5%	1/16W	
R665	1-216-825-11	METAL CHIP	2.2K	5%	1/16W	
R666	1-216-827-11	METAL CHIP	3.3K	5%	1/16W	
R667	1-216-820-11	METAL CHIP	820	5%	1/16W	
R668	1-216-824-11	METAL CHIP	1.8K	5%	1/16W	
R669	1-216-825-11	METAL CHIP	2.2K	5%	1/16W	(TR42/TR72/TR82/TR430/TR550)
R670	1-216-825-11	METAL CHIP	2.2K	5%	1/16W	(TR42/TR72/TR82/TR430/TR550)
R701	1-216-857-11	METAL CHIP	1M	5%	1/16W	
R702	1-216-833-11	METAL CHIP	10K	5%	1/16W	
R703	1-216-845-11	METAL CHIP	100K	5%	1/16W	
R704	1-216-840-11	METAL CHIP	39K	5%	1/16W	(TR42/TR82/TR400/TR550/TR750)
R705	1-216-827-11	METAL CHIP	3.3K	5%	1/16W	
R709	1-216-845-11	METAL CHIP	100K	5%	1/16W	
R710	1-216-864-11	METAL CHIP	0	5%	1/16W	(TR42/TR70/TR72/TR80/TR430)
R711	1-216-864-11	METAL CHIP	0	5%	1/16W	(TR82/TR400/TR550/TR750)
R712	1-216-864-11	METAL CHIP	0	5%	1/16W	(TR42/TR70/TR72/TR80/TR430)
R713	1-216-807-11	METAL CHIP	68	5%	1/16W	
R714	1-216-864-11	METAL CHIP	0	5%	1/16W	
R715	1-216-864-11	METAL CHIP	0	5%	1/16W	(TR82/TR400/TR550/TR750)
R716	1-218-847-11	METAL CHIP	1K	0.50%	1/16W	
R717	1-216-864-11	METAL CHIP	0	5%	1/16W	(TR82/TR400/TR550/TR750)
R718	1-216-807-11	METAL CHIP	68	5%	1/16W	
R719	1-218-876-11	METAL CHIP	16K	0.50%	1/16W	
R720	1-216-841-11	METAL CHIP	47K	5%	1/16W	(TR42)
R720	1-216-843-11	METAL CHIP	68K	5%	1/16W	(TR82/TR400/TR550/TR750)
R720	1-216-844-11	METAL CHIP	82K	5%	1/16W	(TR70/TR72/TR80/TR430)
R721	1-216-864-11	METAL CHIP	0	5%	1/16W	(TR42/TR82/TR400/TR550/TR750)
R722	1-216-864-11	METAL CHIP	0	5%	1/16W	(TR42/TR82/TR400/TR550/TR750)
R723	1-216-864-11	METAL CHIP	0	5%	1/16W	(TR70/TR72/TR80/TR430)
R724	1-216-864-11	METAL CHIP	0	5%	1/16W	(TR42/TR82/TR400/TR550/TR750)
R725	1-216-841-11	METAL CHIP	47K	5%	1/16W	
R739	1-216-864-11	METAL CHIP	0	5%	1/16W	(TR42)
R740	1-216-864-11	METAL CHIP	0	5%	1/16W	(TR70/TR72/TR80/TR82/TR400/TR430/TR550/TR750)
R741	1-218-855-11	METAL CHIP	2.2K	0.50%	1/16W	
R742	1-218-865-11	METAL CHIP	5.6K	0.50%	1/16W	
R743	1-216-833-11	METAL CHIP	10K	5%	1/16W	
R744	1-216-827-11	METAL CHIP	3.3K	5%	1/16W	
R745	1-216-837-11	METAL CHIP	22K	5%	1/16W	
R746	1-216-837-11	METAL CHIP	22K	5%	1/16W	
R747	1-216-820-11	METAL CHIP	820	5%	1/16W	
R748	1-216-828-11	METAL CHIP	3.9K	5%	1/16W	
R749	1-216-851-11	METAL CHIP	330K	5%	1/16W	
R750	1-216-841-11	METAL CHIP	47K	5%	1/16W	
R751	1-216-809-11	METAL CHIP	100	5%	1/16W	
R752	1-216-821-11	METAL CHIP	1K	5%	1/16W	
R753	1-216-845-11	METAL CHIP	100K	5%	1/16W	
R754	1-216-848-11	METAL CHIP	180K	5%	1/16W	
R755	1-216-855-11	METAL CHIP	680K	5%	1/16W	
R756	1-216-848-11	METAL CHIP	180K	5%	1/16W	
R757	1-216-833-11	METAL CHIP	10K	5%	1/16W	
R758	1-216-837-11	METAL CHIP	22K	5%	1/16W	
R759	1-216-837-11	METAL CHIP	22K	5%	1/16W	
R760	1-216-826-11	METAL CHIP	2.7K	5%	1/16W	
R761	1-216-842-11	METAL CHIP	56K	5%	1/16W	
R762	1-216-842-11	METAL CHIP	56K	5%	1/16W	
R764	1-216-828-11	METAL CHIP	3.9K	5%	1/16W	
R765	1-216-833-11	METAL CHIP	10K	5%	1/16W	(TR82/TR400/TR550/TR750)
R766	1-216-835-11	METAL CHIP	15K	5%	1/16W	(TR82/TR400/TR550/TR750)
R767	1-216-850-11	METAL CHIP	270K	5%	1/16W	(TR82/TR400/TR550/TR750)
R768	1-216-833-11	METAL CHIP	10K	5%	1/16W	(TR82/TR400/TR550/TR750)
R769	1-216-850-11	METAL CHIP	270K	5%	1/16W	(TR82/TR400/TR550/TR750)
R770	1-216-835-11	METAL CHIP	15K	5%	1/16W	(TR82/TR400/TR550/TR750)
R771	1-216-803-11	METAL CHIP	33	5%	1/16W	(TR82/TR400/TR550/TR750)

Ref. No.	Part No.	Description				Remark
R644	1-216-833-11	METAL CHIP	10K	5%	1/16W	
R645	1-216-834-11	METAL CHIP	15K	5%	1/16W	
R646	1-216-818-11	METAL CHIP	560	5%	1/16W	
R647	1-216-834-11	METAL CHIP	12K	5%	1/16W	
R648	1-216-818-11	METAL CHIP	560	5%	1/16W	
R649	1-216-841-11	METAL CHIP	47K	5%	1/16W	
R650	1-216-827-11	METAL CHIP	3.3K	5%	1/16W	
R651	1-216-837-11	METAL CHIP	8.2K	5%	1/16W	
R652	1-219-841-11	METAL CHIP	47K	5%	1/16W	
R653	1-216-864-11	METAL CHIP	0	5%	1/16W	
R656	1-216-864-11	METAL CHIP	0	5%	1/16W	(TR42/TR70/TR72/TR80/TR430)
R657	1-216-864-11	METAL CHIP	0	5%	1/16W	(TR82/TR400/TR550/TR750)
R658	1-216-864-11	METAL CHIP	0	5%	1/16W	
R659	1-216-823-11	METAL CHIP	1.5K	5%	1/16W	
R661	1-216-841-11	METAL CHIP	47K	5%	1/16W	
R662	1-216-821-11	METAL CHIP	1K	5%	1/16W	
R663	1-216-825-11	METAL CHIP	2.2K	5%	1/16W	
R664	1-216-821-11	METAL CHIP	1K	5%	1/16W	
R665	1-216-825-11	METAL CHIP	2.2K	5%	1/16W	
R666	1-216-827-11	METAL CHIP	3.3K	5%	1/16W	
R667	1-216-820-11	METAL CHIP	820	5%	1/16W	
R668	1-216-824-11	METAL CHIP	1.8K	5%	1/16W	
R669	1-216-825-11	METAL CHIP	2.2K	5%	1/16W	(TR42/TR72/TR82/TR430/TR550)
R670	1-216-825-11	METAL CHIP	2.2K	5%	1/16W	(TR42/TR72/TR82/TR430/TR550)
R701	1-216-857-11	METAL CHIP	1M	5%	1/16W	
R702	1-216-833-11	METAL CHIP	10K	5%	1/16W	
R703	1-216-845-11	METAL CHIP	100K	5%	1/16W	
R704	1-216-840-11	METAL CHIP	82K	5%	1/16W	(TR42/TR82/TR400/TR550/TR750)
R705	1-216-827-11	METAL CHIP	3.3K	5%	1/16W	
R709	1-216-845-11	METAL CHIP	100K	5%	1/16W	
R710	1-216-864-11	METAL CHIP	0	5%	1/16W	(TR42/TR70/TR72/TR80/TR430)
R711	1-216-864-11	METAL CHIP	0	5%	1/16W	(TR82/TR400/TR550/TR750)
R712	1-216-864-11	METAL CHIP	0	5%	1/16W	(TR42/TR72/TR72/TR80/TR430)
R713	1-216-807-11	METAL CHIP	68	5%	1/16W	
R714	1-216-864-11	METAL CHIP	0	5%	1/16W	
R715	1-216-864-11	METAL CHIP	0	5%	1/16W	(TR82/TR400/TR550/TR750)
R716	1-216-847-11	METAL CHIP	1K	0.50%	1/16W	
R717	1-216-864-11	METAL CHIP	0	5%	1/16W	(TR82/TR400/TR550/TR750)
R718	1-216-807-11	METAL CHIP	68	5%	1/16W	
R719	1-216-876-11	METAL CHIP	16K	0.50%	1/16W	
R720	1-216-841-11	METAL CHIP	47K	5%	1/16W	(TR42)
R720	1-216-843-11	METAL CHIP	68K	5%	1/16W	(TR82/TR400/TR550/TR750)
R720	1-216-844-11	METAL CHIP	82K	5%	1/16W	(TR70/TR72/TR80/TR430)
R721	1-216-864-11	METAL CHIP	0	5%	1/16W	(TR42/TR82/TR400/TR550/TR750)
R722	1-216-864-11	METAL CHIP	0	5%	1/16W	(TR42/TR82/TR400/TR550/TR750)
R723	1-216-864-11	METAL CHIP	0	5%	1/16W	(TR70/TR72/TR80/TR430)
R724	1-216-864-11	METAL CHIP	0	5%	1/16W	(TR42/TR82/TR400/TR550/TR750)
R725	1-216-841-11	METAL CHIP	47K	5%	1/16W	
R726	1-216-864-11	METAL CHIP	0	5%	1/16W	(TR42)
R740	1-216-864-11	METAL CHIP	0	5%	1/16W	(TR70/TR72/TR80/TR82/TR400/TR430/TR550/TR750)
R741	1-216-855-11	METAL CHIP	2.2K	0.50%	1/16W	
R743	1-216-865-11	METAL CHIP	5.6K	0.50%	1/16W	
R743	1-216-833-11	METAL CHIP	10K	5%	1/16W	
R744	1-216-837-11	METAL CHIP	3.3K	5%	1/16W	
R745	1-216-837-11	METAL CHIP	22K	5%	1/16W	
R746	1-216-837-11	METAL CHIP	22K	5%	1/16W	
R747	1-216-820-11	METAL CHIP	820	5%	1/16W	
R748	1-216-828-11	METAL CHIP	3.9K	5%	1/16W	
R749	1-216-851-11	METAL CHIP	390K	5%	1/16W	
R750	1-216-841-11	METAL CHIP	47K	5%	1/16W	
R751	1-216-809-11	METAL CHIP	100	5%	1/16W	
R752	1-216-821-11	METAL CHIP	1K	5%	1/16W	
R753	1-216-845-11	METAL CHIP	100K	5%	1/16W	
R754	1-216-849-11	METAL CHIP	180K	5%	1/16W	
R755	1-216-855-11	METAL CHIP	390K	5%	1/16W	
R756	1-216-849-11	METAL CHIP	180K	5%	1/16W	
R757	1-216-833-11	METAL CHIP	10K	5%	1/16W	
R758	1-216-837-11	METAL CHIP	22K	5%	1/16W	
R759	1-216-837-11	METAL CHIP	22K	5%	1/16W	
R760	1-216-829-11	METAL CHIP	2.7K	5%	1/16W	
R761	1-216-843-11	METAL CHIP	56K	5%	1/16W	
R762	1-216-843-11	METAL CHIP	56K	5%	1/16W	
R764	1-216-828-11	METAL CHIP	3.9K	5%	1/16W	
R765	1-216-833-11	METAL CHIP	10K	5%	1/16W	(TR82/TR400/TR550/TR750)
R766	1-216-835-11	METAL CHIP	15K	5%	1/16W	(TR82/TR400/TR550/TR750)
R767	1-216-850-11	METAL CHIP	270K	5%	1/16W	(TR82/TR400/TR550/TR750)
R768	1-216-833-11	METAL CHIP	10K	5%	1/16W	(TR82/TR400/TR550/TR750)
R769	1-216-850-11	METAL CHIP	270K	5%	1/16W	(TR82/TR400/TR550/TR750)
R770	1-216-835-11	METAL CHIP	15K	5%	1/16W	(TR82/TR400/TR550/TR750)
R771	1-216-809-11	METAL CHIP	33	5%	1/16W	(TR82/TR400/TR550/TR750)

Ref. No.	Part No.	Description	Remark
R772	1-216-837-11	METAL CHIP 22K 5% 1/16W (TR82/TR400/TR550/TR750)	
R773	1-216-837-11	METAL CHIP 22K 5% 1/16W (TR82/TR400/TR550/TR750)	
R774	1-216-837-11	METAL CHIP 22K 5% 1/16W (TR82/TR400/TR550/TR750)	
R775	1-216-837-11	METAL CHIP 22K 5% 1/16W (TR82/TR400/TR550/TR750)	
R776	1-216-837-11	METAL CHIP 22K 5% 1/16W (TR82/TR400/TR550/TR750)	
R777	1-216-837-11	METAL CHIP 22K 5% 1/16W (TR82/TR400/TR550/TR750)	
R778	1-216-833-11	METAL CHIP 10K 5% 1/16W (TR82/TR400/TR550/TR750)	
R779	1-218-911-11	METAL CHIP 470K 0.50% 1/16W (TR82/TR400/TR550/TR750)	
R780	1-218-911-11	METAL CHIP 470K 0.50% 1/16W (TR82/TR400/TR550/TR750)	
R781	1-216-833-11	METAL CHIP 10K 5% 1/16W (TR82/TR400/TR550/TR750)	
R782	1-218-911-11	METAL CHIP 470K 0.50% 1/16W (TR82/TR400/TR550/TR750)	
R783	1-218-911-11	METAL CHIP 470K 0.50% 1/16W (TR82/TR400/TR550/TR750)	
R786	1-216-841-11	METAL CHIP 47K 5% 1/16W (TR82/TR400/TR550/TR750)	
R787	1-216-841-11	METAL CHIP 47K 5% 1/16W (TR82/TR400/TR550/TR750)	
R788	1-216-841-11	METAL CHIP 47K 5% 1/16W (TR82/TR400/TR550/TR750)	
R789	1-216-841-11	METAL CHIP 47K 5% 1/16W (TR82/TR400/TR550/TR750)	
R790	1-216-833-11	METAL CHIP 10K 5% 1/16W (TR82/TR400/TR550/TR750)	
R791	1-216-864-11	METAL CHIP 0 5% 1/16W (TR82/TR400/TR550/TR750)	
R792	1-216-857-11	METAL CHIP 1M 5% 1/16W (TR82/TR400/TR550/TR750)	
R793	1-216-841-11	METAL CHIP 47K 5% 1/16W (TR82/TR400/TR550/TR750)	
		< VIBRATOR >	
X601	1-760-081-21	VIBRATOR, CERAMIC (24MHz)	
X701	1-760-320-11	VIBRATOR, CRYSTAL (28.6363MHz)	
X775	1-579-553-11	VIBRATOR (12MHz) (TR82/TR400/TR550/TR750)	

****

* A-7063-957-A VF-65 BOARD, COMPLETE
****
(TR42/TR72/TR82/TR400/TR430/TR550/TR750)
(Ref. No. 8,000 Series)

Ref. No.	Part No.	Description	Remark
		< CAPACITOR >	
C901	1-124-635-00	ELECT 220uF 20% 6.3V	
C902	1-163-038-11	CERAMIC CHIP 0.1uF 25V	
C903	1-135-091-21	TANTAL. CHIP 1uF 20% 16V	
C904	1-163-011-11	CERAMIC CHIP 0.0015uF 10% 50V	
C905	1-104-753-11	TANTAL. CHIP 47uF 20% 6.3V	
C906	1-162-638-11	CERAMIC CHIP 1uF 16V	
C907	1-137-306-11	FILM CHIP 0.1uF 5% 16V	
C908	1-163-109-00	CERAMIC CHIP 47PF 5% 50V	
C909	1-163-009-11	CERAMIC CHIP 0.001uF 10% 50V	
⚠C910	1-164-758-11	CERAMIC CHIP 0.0039uF 5% 50V	
⚠C911	1-164-715-11	CERAMIC CHIP 0.0068uF 5% 50V	
C912	1-127-532-11	ELECT(SOLID) 47uF 20% 6.3V	
C913	1-124-577-11	ELECT 82uF 20% 10V	
C914	1-128-007-11	ELECT CHIP 2.2uF 20% 35V	
C915	1-163-037-11	CERAMIC CHIP 0.022uF 10% 25V	
C916	1-164-611-11	CERAMIC CHIP 0.001uF 10% 500V	
		< CONNECTOR >	
CN901	1-566-537-11	CONNECTOR, FPC (NON ZIF) 5P	
CN902	1-573-290-11	PIN, CONNECTOR (1.5MM) (SMD) 4P	
		< DIODE >	
D901	8-719-404-19	DIODE LN1251 (TALLY)	
D903	8-719-400-20	DIODE MA152WA	
		< IC >	
IC901	8-759-196-14	IC BA7149F-E2	
		< COIL >	
L901	1-412-031-11	INDUCTOR CHIP 47uH	
L902	1-410-389-31	INDUCTOR CHIP 47uH	
⚠L903	1-402-680-21	COIL, FERRITE (HLC)	
		< TRANSISTOR >	
⚠Q901	8-729-120-28	TRANSISTOR 2SC1623-L5L6	
Q902	8-729-106-68	TRANSISTOR 2SD1615A-GP	
Q903	8-729-216-31	TRANSISTOR 2SA1163-G	
Q904	8-729-120-28	TRANSISTOR 2SC1623-L5L6	
		< RESISTOR >	
R901	1-216-041-00	METAL CHIP 470 5% 1/10W	
R902	1-216-041-00	METAL CHIP 470 5% 1/10W	
R903	1-216-035-00	METAL CHIP 270 5% 1/10W	
⚠R904	1-216-073-00	METAL CHIP 10K 5% 1/10W	
⚠R905	1-216-051-00	METAL CHIP 1.2K 5% 1/10W	
R906	1-216-047-00	METAL CHIP 820 5% 1/10W	
R907	1-216-097-00	METAL CHIP 100K 5% 1/10W	
R908	1-216-111-00	METAL CHIP 390K 5% 1/10W	
R909	1-216-073-00	METAL CHIP 10K 5% 1/10W	
R910	1-216-077-00	METAL CHIP 15K 5% 1/10W	

The components identified by mark ⚠ or dotted line with mark ⚠ are critical for safety. Replace only with part number specified.	Les composants identifiés par une marque ⚠ sont critiques pour la sécurité. Ne les remplacer que par une piéce portant le numéro spécifié.

Ref. No.	Part No.	Description	Remark
R772	1-216-837-11	METAL CHIP 22K 5% 1/16W (TR32/TR400/TR550/TR750)	
R773	1-216-837-11	METAL CHIP 22K 5% 1/16W (TR32/TR400/TR550/TR750)	
R774	1-216-837-11	METAL CHIP 22K 5% 1/16W (TR32/TR400/TR550/TR750)	
R775	1-216-837-11	METAL CHIP 22K 5% 1/16W (TR32/TR400/TR550/TR750)	
R776	1-216-837-11	METAL CHIP 22K 5% 1/16W (TR32/TR400/TR550/TR750)	
R777	1-216-837-11	METAL CHIP 22K 5% 1/16W (TR32/TR400/TR550/TR750)	
R778	1-216-839-11	METAL CHIP 10K 5% 1/16W (TR32/TR400/TR550/TR750)	
R779	1-216-811-11	METAL CHIP 470K 0.50% 1/16W (TR32/TR400/TR550/TR750)	
R780	1-216-811-11	METAL CHIP 470K 0.50% 1/16W (TR32/TR400/TR550/TR750)	
R781	1-216-833-11	METAL CHIP 10K 5% 1/16W (TR32/TR400/TR550/TR750)	
R782	1-216-811-11	METAL CHIP 470K 0.50% 1/16W (TR32/TR400/TR550/TR750)	
R783	1-216-811-11	METAL CHIP 470K 0.50% 1/16W (TR32/TR400/TR550/TR750)	
R786	1-216-841-11	METAL CHIP 47K 5% 1/16W (TR32/TR400/TR550/TR750)	
R787	1-216-841-11	METAL CHIP 47K 5% 1/16W (TR32/TR400/TR550/TR750)	
R788	1-216-841-11	METAL CHIP 47K 5% 1/16W (TR32/TR400/TR550/TR750)	
R789	1-216-841-11	METAL CHIP 47K 5% 1/16W (TR32/TR400/TR550/TR750)	
R790	1-216-838-11	METAL CHIP 10K 5% 1/16W (TR32/TR400/TR550/TR750)	
R791	1-216-864-11	METAL CHIP 0 5% 1/16W (TR32/TR400/TR550/TR750)	
R792	1-216-857-11	METAL CHIP 1M 5% 1/16W (TR32/TR400/TR550/TR750)	
R793	1-216-841-11	METAL CHIP 47K 5% 1/16W (TR32/TR400/TR550/TR750)	
		< VIBRATOR >	
X601	1-760-081-21	VIBRATOR, CERAMIC (2.0MHz)	
X701	1-760-320-11	VIBRATOR, CRYSTAL (38.6868MHz)	
X715	1-579-553-11	VIBRATOR (1MHz) (TR32/TR400/TR550/TR750)	
**********			
*	A-7063-957-A	VF-65 BOARD, COMPLETE ********** (TR42/TR78/TR32/TR400/TR430/TR550/TR750) (Ref. No. 8,000 Series)	
		< CAPACITOR >	
C901	1-124-635-00	ELECT 220uF 20% 6.3V	

Ref. No.	Part No.	Description				Remark
C902	1-163-038-11	CERAMIC CHIP	0.1uF		25V	
C903	1-135-091-21	TANTAL. CHIP	1uF	20%	16V	
C904	1-163-011-11	CERAMIC CHIP	0.0015uF	10%	50V	
C905	1-104-753-11	TANTAL. CHIP	47uF	20%	6.3V	
C906	1-162-638-11	CERAMIC CHIP	1uF		16V	
C907	1-137-308-11	FILM CHIP	0.1uF	5%	16V	
C908	1-163-109-00	CERAMIC CHIP	47PF	5%	50V	
C909	1-163-009-11	CERAMIC CHIP	0.001uF	10%	50V	
⚠C910	1-164-754-11	CERAMIC CHIP	0.0068uF	5%	50V	
⚠C911	1-164-715-11	CERAMIC CHIP	0.0068uF	5%	50V	
C912	1-137-632-11	ELECT(SOLID)	47uF	20%	6.3V	
C913	1-124-577-11	ELECT	22uF	20%	10V	
C914	1-123-007-11	ELECT CHIP	2.2uF	20%	35V	
C915	1-163-037-11	CERAMIC CHIP	0.022uF	10%	25V	
C916	1-164-611-11	CERAMIC CHIP	0.001uF	10%	50CV	
		< CONNECTOR >				
CN601	1-500-537-11	CONNECTOR, FPC (NON ZIF) SP				
CN603	1-573-290-11	PIN CONNECTOR (1.5MM) (SMD)4P				
		< DIODE >				
D901	8-719-404-19	DIODE LR1251 (TALLY)				
D903	8-719-400-20	DIODE MA150WA				
		< IC >				
IC301	8-759-198-14	IC BA7149F-E2				
		< COIL >				
L901	1-418-831-11	INDUCTOR CHIP 47nH				
L902	1-418-989-31	INDUCTOR CHIP 47nH				
⚠L903	1-408-680-21	COIL, FERRITE (HLC)				
		< TRANSISTOR >				
⚠Q801	8-729-120-85	TRANSISTOR 2SC1623-L5L6				
Q802	8-729-106-68	TRANSISTOR 2SD1815A-GP				
Q803	8-729-216-31	TRANSISTOR 2SA1188-G				
Q804	8-729-120-85	TRANSISTOR 2SC1623-L5L6				
		< RESISTOR >				
R901	1-216-041-00	METAL CHIP	470	5%	1/10W	
R902	1-216-041-00	METAL CHIP	470	5%	1/10W	
R903	1-216-035-00	METAL CHIP	270	5%	1/10W	
⚠R904	1-216-073-00	METAL CHIP	10K	5%	1/10W	
⚠R905	1-216-051-00	METAL CHIP	1.2K	5%	1/10W	
R906	1-216-047-00	METAL CHIP	820	5%	1/10W	
R907	1-216-097-00	METAL CHIP	100K	5%	1/10W	
R908	1-216-111-00	METAL CHIP	390K	5%	1/10W	
R909	1-216-073-00	METAL CHIP	10K	5%	1/10W	
R910	1-216-077-00	METAL CHIP	15K	5%	1/10W	

The components identified by mark ⚠ or dotted line with mark ⚠ are critical for safety.
Replace only with part number specified.

Les composants identifiés par une marque ⚠ sont critiques pour la sécurité.
Ne les remplacer que par une pièce portant le numéro spécifié.

Ref. No.	Part No.	Description				Remark
R911	1-216-160-00	METAL GLAZE	27	5%	1/8W	
R912	1-216-121-00	METAL CHIP	1M	5%	1/10W	
R913	1-216-055-00	METAL CHIP	1.8K	5%	1/10W	
R914	1-216-025-00	METAL CHIP	100	5%	1/10W	
R915	1-216-308-00	METAL CHIP	4.7	5%	1/10W	
R916	1-216-683-11	METAL CHIP	22K	0.5%	1/10W	
R917	1-216-693-11	METAL CHIP	56K	0.5%	1/10W	
R918	1-216-069-00	METAL CHIP	6.8K	5%	1/10W	
R919	1-216-689-11	METAL CHIP	39K	0.5%	1/10W	
R920	1-216-689-11	METAL CHIP	39K	0.5%	1/10W	
R921	1-216-311-00	METAL CHIP	6.8	5%	1/10W	
R922	1-216-101-00	METAL CHIP	150K	5%	1/10W	
R923	1-216-121-00	METAL CHIP	1M	5%	1/10W	
R924	1-216-131-11	METAL CHIP	2.7M	5%	1/10W	
R925	1-216-131-11	METAL CHIP	2.7M	5%	1/10W	
R926	1-216-295-00	METAL CHIP	0	5%	1/10W	
R927	1-216-049-00	METAL CHIP	1K	5%	1/10W	
R928	1-216-053-00	METAL CHIP	1.5K	5%	1/10W	
		< VARIABLE RESISTOR >				
RV903	1-238-086-11	RES, ADJ, CERMET	470			
RV904	1-223-566-11	RES, ADJ, METAL GLAZE	1M			
		< TRANSFORMER >				
⚠T901	1-453-124-11	TRANSFORMER ASSY, FLYBACK				
		< THERMISTOR >				
TH901	1-809-350-21	THERMISTOR, NTC (2125)				
		< SOCKET >				
⚠W901	1-540-019-21	SOCKET ASSY, CRT				

****

* A-7066-010-A VF-66 BOARD, COMPLETE (TR70/TR80)
****
(Ref. No. 4,000 Series)

Ref. No.	Part No.	Description				Remark
		< CAPACITOR >				
C851	1-162-967-11	CERAMIC CHIP	0.0033uF	10%	50V	
C852	1-162-974-11	CERAMIC CHIP	0.01uF		50V	
C853	1-104-916-11	TANTAL. CHIP	6.8uF	20%	20V	
C854	1-164-227-11	CERAMIC CHIP	0.022uF	10%	25V	
C855	1-162-974-11	CERAMIC CHIP	0.01uF		50V	
C856	1-135-181-21	TANTALUM CHIP	4.7uF	20%	6.3V	
C857	1-164-676-11	CERAMIC CHIP	2200PF	5%	16V	
C858	1-135-181-21	TANTALUM CHIP	4.7uF	20%	6.3V	
C859	1-164-227-11	CERAMIC CHIP	0.022uF	10%	25V	
C860	1-164-232-11	CERAMIC CHIP	0.01uF		50V	
C861	1-104-917-11	TANTAL. CHIP	15uF	20%	20V	
C862	1-165-178-11	CERAMIC CHIP	6.8uF		16V	
C863	1-163-020-00	CERAMIC CHIP	0.0082uF	10%	50V	
C864	1-163-020-00	CERAMIC CHIP	0.0082uF	10%	50V	
C865	1-162-921-11	CERAMIC CHIP	33PF	5%	50V	
C866	1-162-974-11	CERAMIC CHIP	0.01uF		50V	
C867	1-135-177-21	TANTALUM CHIP	1uF	20%	20V	
C868	1-165-128-11	CERAMIC CHIP	0.22uF		16V	
C869	1-163-020-00	CERAMIC CHIP	0.0082uF	10%	50V	
C870	1-162-974-11	CERAMIC CHIP	0.01uF		50V	
		< CONNECTOR >				
CN851	1-573-354-11	CONNECTOR, FFC/FPC 14P				
CN852	1-573-354-11	CONNECTOR, FFC/FPC 14P				
CN853	1-573-811-11	CONNECTOR, BOARD TO BOARD 12P				
		< DIODE >				
D851	8-719-404-19	DIODE	LN1251C (TALLY)			
D852	8-719-043-70	DIODE	MA6S121			
D853	8-719-802-36	DIODE	1SS250			
		< IC >				
IC851	8-759-097-75	IC	MB3789PFV-G-BND-ER			
IC852	8-759-508-68	IC	XRA10358F-E2			
		< COIL >				
L851	1-412-033-11	INDUCTOR CHIP 220uH				
L852	1-412-029-11	INDUCTOR CHIP 10uH				
L853	1-412-033-11	INDUCTOR CHIP 220uH				
		< TRANSISTOR >				
Q851	8-729-024-60	TRANSISTOR	MTD6N15T4			
Q852	8-729-402-84	TRANSISTOR	XN4601			
Q853	8-729-923-62	TRANSISTOR	DTA123JK			
		< RESISTOR >				
R851	1-216-819-11	METAL CHIP	680	5%	1/16W	
R852	1-216-841-11	METAL CHIP	47K	5%	1/16W	
R853	1-218-899-11	METAL CHIP	150K	0.50%	1/16W	
R854	1-218-901-11	METAL CHIP	180K	0.50%	1/16W	
R855	1-216-840-11	METAL CHIP	39K	5%	1/16W	
R856	1-218-899-11	METAL CHIP	150K	0.50%	1/16W	
R857	1-218-903-11	METAL CHIP	220K	0.50%	1/16W	
R858	1-216-841-11	METAL CHIP	47K	5%	1/16W	
R859	1-216-849-11	METAL CHIP	220K	5%	1/16W	
R860	1-216-843-11	METAL CHIP	68K	5%	1/16W	
R861	1-216-843-11	METAL CHIP	68K	5%	1/16W	
R862	1-216-838-11	METAL CHIP	27K	5%	1/16W	
R863	1-216-847-11	METAL CHIP	150K	5%	1/16W	
R864	1-216-840-11	METAL CHIP	39K	5%	1/16W	
R865	1-216-841-11	METAL CHIP	47K	5%	1/16W	

The components identified by mark ⚠ or dotted line with mark ⚠ are critical for safety. Replace only with part number specified.	Les composants identifiés par une marque ⚠ sont critiques pour la sécurité. Ne les remplacer que par une piéce portant le numéro spécifié.

Ref. No.	Part No.	Description				Remark
R911	1-216-165-00	METAL GLAZE	27	5%	1/8W	
R912	1-216-121-00	METAL CHIP	1M	5%	1/10W	
R913	1-216-055-00	METAL CHIP	1.8K	5%	1/10W	
R914	1-216-025-00	METAL CHIP	100	5%	1/10W	
R915	1-216-304-00	METAL CHIP	4.7	5%	1/10W	
R916	1-216-883-11	METAL CHIP	22K	0.5%	1/10W	
R917	1-216-893-11	METAL CHIP	56K	0.5%	1/10W	
R918	1-216-069-00	METAL CHIP	6.8K	5%	1/10W	
R919	1-216-889-11	METAL CHIP	39K	0.5%	1/10W	
R920	1-216-889-11	METAL CHIP	39K	0.5%	1/10W	
R921	1-216-311-00	METAL CHIP	6.8	5%	1/10W	
R922	1-216-101-00	METAL CHIP	150K	5%	1/10W	
R923	1-216-121-00	METAL CHIP	1M	5%	1/10W	
R924	1-216-131-11	METAL CHIP	2.7M	5%	1/10W	
R925	1-216-131-11	METAL CHIP	2.7M	5%	1/10W	
R926	1-216-296-00	METAL CHIP	0	5%	1/10W	
R927	1-216-049-00	METAL CHIP	1K	5%	1/10W	
R928	1-216-053-00	METAL CHIP	1.5K	5%	1/10W	
		< VARIABLE RESISTOR >				
RV903	1-238-088-11	RES, ADJ, CERMET	470			
RV904	1-223-686-11	RES, ADJ, METAL GLAZE	1M			
		< TRANSFORMER >				
⚠T901	1-453-124-11	TRANSFORMER ASSY, FLYBACK				
		< THERMISTOR >				
TH901	1-809-252-81	THERMISTOR, NTC (2125)				
		< SOCKET >				
⚠J901	1-540-010-81	SOCKET ASSY, CRT				

****

Ref. No.	Part No.	Description				Remark
*	A-7066-010-A	VF-66 BOARD, COMPLETE (TR70/TR80)				
		(Ref. No. 4,000 Series)				
		< CAPACITOR >				
C851	1-162-967-11	CERAMIC CHIP	0.0033uF	10%	50V	
C852	1-162-974-11	CERAMIC CHIP	0.01uF		50V	
C853	1-104-918-11	TANTAL. CHIP	6.8uF	20%	20V	
C854	1-164-227-11	CERAMIC CHIP	0.022uF	10%	25V	
C855	1-162-974-11	CERAMIC CHIP	0.01uF		50V	
C856	1-135-181-21	TANTALUM CHIP	4.7uF	20%	6.3V	
C857	1-164-678-11	CERAMIC CHIP	2200PF	5%	16V	
C858	1-135-181-21	TANTALUM CHIP	4.7uF	20%	6.3V	
C859	1-164-227-11	CERAMIC CHIP	0.022uF	10%	25V	
C860	1-164-232-11	CERAMIC CHIP	0.01uF		50V	
C861	1-104-817-11	TANTAL. CHIP	15uF	20%	20V	
C862	1-165-178-11	CERAMIC CHIP	6.8uF		16V	
C863	1-163-020-00	CERAMIC CHIP	0.0082uF	10%	50V	
C864	1-163-020-00	CERAMIC CHIP	0.0082uF	10%	50V	
C865	1-162-921-11	CERAMIC CHIP	33PF	5%	50V	
C866	1-162-974-11	CERAMIC CHIP	0.01uF		50V	
C867	1-135-177-21	TANTALUM CHIP	1uF	20%	35V	
C868	1-165-128-11	CERAMIC CHIP	0.22uF		16V	
C869	1-163-037-00	CERAMIC CHIP	0.0082uF	10%	50V	
C870	1-162-974-11	CERAMIC CHIP	0.01uF		50V	
		< CONNECTOR >				
CN851	1-573-364-11	CONNECTOR, FFC/FPC 14P				
CN852	1-573-364-11	CONNECTOR, FFC/FPC 14P				
CN853	1-573-811-11	CONNECTOR, BOARD TO BOARD 12P				
		< DIODE >				
D851	8-719-404-19	DIODE LN1351C (TALLY)				
D852	8-719-042-70	DIODE MA8S121				
D853	8-719-802-36	DIODE 1SS250				
		< IC >				
IC851	8-759-097-75	IC MB3789PFV-G-BND-ER				
IC852	8-759-508-88	IC BA10358F-E2				
		< COIL >				
L851	1-412-033-11	INDUCTOR CHIP 220uH				
L852	1-412-029-11	INDUCTOR CHIP 10uH				
L853	1-412-033-11	INDUCTOR CHIP 220uH				
		< TRANSISTOR >				
Q851	8-729-024-60	TRANSISTOR MTD6N15T4				
Q852	8-729-402-84	TRANSISTOR XN4601				
Q853	8-729-923-62	TRANSISTOR DTA123JK				
		< RESISTOR >				
R851	1-216-819-11	METAL CHIP	680	5%	1/16W	
R852	1-216-841-11	METAL CHIP	47K	5%	1/16W	
R853	1-218-899-11	METAL CHIP	150K	0.50%	1/16W	
R854	1-218-901-11	METAL CHIP	180K	0.50%	1/16W	
R855	1-216-840-11	METAL CHIP	39K	5%	1/16W	
R856	1-218-898-11	METAL CHIP	150K	0.50%	1/16W	
R857	1-218-905-11	METAL CHIP	220K	0.50%	1/16W	
R858	1-216-841-11	METAL CHIP	47K	5%	1/16W	
R859	1-216-849-11	METAL CHIP	220K	5%	1/16W	
R860	1-216-843-11	METAL CHIP	68K	5%	1/16W	
R861	1-216-843-11	METAL CHIP	68K	5%	1/16W	
R862	1-216-838-11	METAL CHIP	27K	5%	1/16W	
R863	1-216-847-11	METAL CHIP	150K	5%	1/16W	
R864	1-216-840-11	METAL CHIP	39K	5%	1/16W	
R865	1-216-841-11	METAL CHIP	47K	5%	1/16W	

The components identified by mark ⚠ or dotted line with mark ⚠ are critical for safety. Replace only with part number specified.	Les composants identifiés par une marque ⚠ sont critiques pour la sécurité. Ne les remplacer que par une pièce portant le numéro spécifié.

Ref. No.	Part No.	Description				Remark
R867	1-216-850-11	METAL CHIP	270K	5%	1/16W	
R868	1-216-864-11	METAL CHIP	0	5%	1/16W	
R869	1-216-843-11	METAL CHIP	68K	5%	1/16W	
R870	1-216-842-11	METAL CHIP	56K	5%	1/16W	
R871	1-216-850-11	METAL CHIP	270K	5%	1/16W	
R872	1-216-833-11	METAL CHIP	10K	5%	1/16W	
R873	1-216-851-11	METAL CHIP	330K	5%	1/16W	
R874	1-216-847-11	METAL CHIP	150K	5%	1/16W	
R875	1-216-829-11	METAL CHIP	4.7K	5%	1/16W	
R876	1-216-833-11	METAL CHIP	10K	5%	1/16W	
R877	1-216-794-11	METAL CHIP	5.6	5%	1/16W	
R878	1-216-804-11	METAL CHIP	39	5%	1/16W	
R879	1-216-837-11	METAL CHIP	22K	5%	1/16W	
R880	1-216-839-11	METAL CHIP	33K	5%	1/16W	
R881	1-216-853-11	METAL CHIP	470K	5%	1/16W	
R891	1-216-296-00	METAL CHIP	0	5%	1/8W	
		< TRANSFORMER >				
⚠T851	0-396-458-00					

****

* A-7066-011-A VF-67 BOARD, COMPLETE (TR70/TR80)
****

< CAPACITOR >

Ref. No.	Part No.	Description				Remark
C901	1-162-974-11	CERAMIC CHIP	0.01uF		50V	
C902	1-162-974-11	CERAMIC CHIP	0.01uF		50V	
C903	1-162-974-11	CERAMIC CHIP	0.01uF		50V	
C904	1-135-259-11	TANTAL. CHIP	10uF	20%	6.3V	
C905	1-135-091-21	TANTAL. CHIP	1uF	20%	16V	
C906	1-162-969-11	CERAMIC CHIP	0.0068uF	10%	25V	
C907	1-135-091-21	TANTAL. CHIP	1uF	20%	16V	
C908	1-162-919-11	CERAMIC CHIP	22PF	5%	50V	
C909	1-162-974-11	CERAMIC CHIP	0.01uF		50V	
C910	1-162-974-11	CERAMIC CHIP	0.01uF		50V	
C911	1-135-259-11	TANTAL. CHIP	10uF	20%	6.3V	
C913	1-164-156-11	CERAMIC CHIP	0.1uF		25V	
C914	1-162-974-11	CERAMIC CHIP	0.01uF		50V	
C915	1-162-974-11	CERAMIC CHIP	0.01uF		50V	
C916	1-162-974-11	CERAMIC CHIP	0.01uF		50V	
C917	1-162-974-11	CERAMIC CHIP	0.01uF		50V	
C920	1-165-176-11	CERAMIC CHIP	0.047uF	10%	16V	
C921	1-162-974-11	CERAMIC CHIP	0.01uF		50V	
C925	1-164-156-11	CERAMIC CHIP	0.1uF		25V	
C926	1-135-181-21	TANTALUM CHIP	4.7uF	20%	6.3V	
C927	1-162-974-11	CERAMIC CHIP	0.01uF		50V	
C928	1-164-344-11	CERAMIC CHIP	0.068uF	10%	25V	
C929	1-164-344-11	CERAMIC CHIP	0.068uF	10%	25V	
C930	1-164-344-11	CERAMIC CHIP	0.068uF	10%	25V	
C931	1-162-974-11	CERAMIC CHIP	0.01uF		50V	
C932	1-162-974-11	CERAMIC CHIP	0.01uF		50V	
C933	1-164-156-11	CERAMIC CHIP	0.1uF		25V	
C934	1-135-145-11	TANTALUM CHIP	0.47uF	10%	35V	
C935	1-135-179-21	TANTAL. CHIP	2.2uF	20%	16V	
C936	1-162-967-11	CERAMIC CHIP	0.0033uF	10%	50V	
C937	1-135-181-21	TANTALUM CHIP	4.7uF	20%	6.3V	
C938	1-162-970-11	CERAMIC CHIP	0.01uF	10%	25V	
C939	1-135-259-11	TANTAL. CHIP	10uF	20%	6.3V	
C940	1-162-927-11	CERAMIC CHIP	100PF	5%	50V	
C941	1-164-357-11	CERAMIC CHIP	1000PF	5%	50V	
C942	1-162-974-11	CERAMIC CHIP	0.01uF		50V	
C943	1-164-156-11	CERAMIC CHIP	0.1uF		25V	
C945	1-162-974-11	CERAMIC CHIP	0.01uF		50V	
C946	1-135-179-21	TANTAL. CHIP	2.2uF	20%	16V	
C947	1-162-974-11	CERAMIC CHIP	0.01uF		50V	
C948	1-162-974-11	CERAMIC CHIP	0.01uF		50V	
C949	1-135-178-11	TANTAL. CHIP	1.5uF	20%	20V	
C950	1-162-974-11	CERAMIC CHIP	0.01uF		50V	
C951	1-162-974-11	CERAMIC CHIP	0.01uF		50V	
C953	1-164-346-11	CERAMIC CHIP	1uF		16V	
C954	1-162-974-11	CERAMIC CHIP	0.01uF		50V	

< CONNECTOR >

Ref. No.	Part No.	Description	Remark
CN901	1-573-354-11	CONNECTOR, FFC/FPC 14P	
* CN902	1-573-984-11	CONNECTOR, BOARD TO BOARD 10P	
* CN903	1-573-356-11	CONNECTOR, FFC/FPC 16P	

< DIODE >

Ref. No.	Part No.	Description	Remark
D901	8-719-025-91	DIODE MA365(E)	
D903	8-719-404-49	DIODE MA111	

< IC >

Ref. No.	Part No.	Description	Remark
IC901	8-752-067-59	IC CXA1785R	
IC902	8-752-362-78	IC CXD2403R	
IC903	8-759-251-40	IC MB88E346PFV-G-BND-ER	

< COIL >

Ref. No.	Part No.	Description	Remark
L901	1-412-951-11	INDUCTOR 10uH	
L902	1-412-962-11	INDUCTOR 82uH	
L904	1-412-951-11	INDUCTOR 10uH	
L905	1-412-949-21	INDUCTOR 6.8uH	
L906	1-412-959-11	INDUCTOR 47uH	

< TRANSISTOR >

Ref. No.	Part No.	Description	Remark
Q901	8-729-402-84	TRANSISTOR XN4601	
Q902	8-729-402-42	TRANSISTOR UN5213	

< RESISTOR >

Ref. No.	Part No.	Description				Remark
R902	1-216-836-11	METAL CHIP	18K	5%	1/16W	
R903	1-216-842-11	METAL CHIP	56K	5%	1/16W	

The components identified by mark ⚠ or dotted line with mark ⚠ are critical for safety. Replace only with part number specified.	Les composants identifiés par une marque ⚠ sont critiques pour la sécurité. Ne les remplacer que par une piéce portant le numéro spécifié.

Ref. No.	Part No.	Description			Remark
R867	1-216-850-11	METAL CHIP	270K	5%	1/16W
R868	1-216-864-11	METAL CHIP	0	5%	1/16W
R869	1-216-845-11	METAL CHIP	68K	5%	1/16W
R870	1-216-842-11	METAL CHIP	56K	5%	1/16W
R871	1-216-850-11	METAL CHIP	270K	5%	1/16W
R872	1-216-833-11	METAL CHIP	12K	5%	1/16W
R873	1-216-851-11	METAL CHIP	330K	5%	1/16W
R874	1-216-847-11	METAL CHIP	150K	5%	1/16W
R875	1-216-829-11	METAL CHIP	4.7K	5%	1/16W
R876	1-216-833-11	METAL CHIP	10K	5%	1/16W
R877	1-216-794-11	METAL CHIP	5.6	5%	1/16W
R878	1-216-804-11	METAL CHIP	39	5%	1/16W
R879	1-216-837-11	METAL CHIP	22K	5%	1/16W
R880	1-216-839-11	METAL CHIP	33K	5%	1/16W
R881	1-216-855-11	METAL CHIP	470K	5%	1/16W
R881	1-216-855-00	METAL CHIP	0	5%	1/8W

< TRANSFORMER >

△T651	0-336-452-00	

****

*	A-7066-011-A	VF-67 BOARD, COMPLETE (TR70/TR80)

****

< CAPACITOR >

Ref. No.	Part No.	Description			Remark
C301	1-163-974-11	CERAMIC CHIP	0.01uF		50V
C302	1-163-974-11	CERAMIC CHIP	0.01uF		50V
C303	1-163-974-11	CERAMIC CHIP	0.01uF		50V
C304	1-135-259-11	TANTAL. CHIP	10uF	20%	6.3V
C305	1-135-091-21	TANTAL. CHIP	1uF	20%	16V
C306	1-162-969-11	CERAMIC CHIP	3.0248uF	10%	25V
C307	1-136-091-21	TANTAL. CHIP	1uF	20%	16V
C308	1-162-919-11	CERAMIC CHIP	22PF	5%	50V
C309	1-162-974-11	CERAMIC CHIP	0.01uF		50V
C310	1-162-974-11	CERAMIC CHIP	0.01uF		50V
C311	1-135-259-11	TANTAL. CHIP	10uF	20%	6.3V
C313	1-164-156-11	CERAMIC CHIP	0.1uF		25V
C314	1-163-974-11	CERAMIC CHIP	0.01uF		50V
C315	1-163-974-11	CERAMIC CHIP	0.01uF		50V
C316	1-163-974-11	CERAMIC CHIP	0.01uF		50V
C317	1-163-974-11	CERAMIC CHIP	0.01uF		50V
C320	1-165-178-11	CERAMIC CHIP	0.047uF	10%	16V
C321	1-163-974-11	CERAMIC CHIP	0.01uF		50V
C325	1-164-156-11	CERAMIC CHIP	0.1uF		25V
C326	1-135-181-21	TANTALUM CHIP	4.7uF	20%	6.3V
C327	1-163-974-11	CERAMIC CHIP	0.01uF		50V
C328	1-164-344-11	CERAMIC CHIP	0.068uF	10%	25V
C329	1-164-344-11	CERAMIC CHIP	0.068uF	10%	25V
C330	1-164-344-11	CERAMIC CHIP	0.068uF	10%	25V
C331	1-163-974-11	CERAMIC CHIP	0.01uF		50V
C332	1-163-974-11	CERAMIC CHIP	0.01uF		50V
C333	1-164-156-11	CERAMIC CHIP	0.1uF		25V
C334	1-135-145-11	TANTALUM CHIP	0.47uF	10%	35V
C335	1-135-179-21	TANTAL. CHIP	2.2uF	20%	16V
C336	1-163-967-11	CERAMIC CHIP	0.0033uF	10%	50V
C337	1-135-181-21	TANTALUM CHIP	4.7uF	20%	6.3V
C338	1-163-970-11	CERAMIC CHIP	0.01uF	10%	25V
C339	1-135-259-11	TANTAL. CHIP	10uF	20%	6.3V
C340	1-163-927-11	CERAMIC CHIP	100PF	5%	50V
C341	1-164-357-11	CERAMIC CHIP	1000PF	5%	50V
C342	1-163-974-11	CERAMIC CHIP.	0.01uF		50V
C343	1-164-156-11	CERAMIC CHIP	0.1uF		25V
C345	1-163-974-11	CERAMIC CHIP	0.01uF		50V
C346	1-135-179-21	TANTAL. CHIP	2.2uF	20%	16V
C347	1-163-974-11	CERAMIC CHIP	0.01uF		50V
C348	1-163-974-11	CERAMIC CHIP	0.01uF		50V
C349	1-135-178-11	TANTAL. CHIP	1.5uF	20%	20V
C350	1-163-974-11	CERAMIC CHIP	0.01uF		50V
C361	1-163-974-11	CERAMIC CHIP	0.01uF		50V
C363	1-164-346-11	CERAMIC CHIP	1uF		16V
C364	1-163-974-11	CERAMIC CHIP	0.01uF		50V

< CONNECTOR >

CN901	1-573-854-11	CONNECTOR, FPC/FPC 14P
* CN902	1-573-864-11	CONNECTOR, BOARD TO BOARD 10P
* CN903	1-573-868-11	CONNECTOR, FPC/FPC 16P

< DIODE >

D601	8-719-025-91	DIODE MA166(K)
D608	8-719-404-49	DIODE MA111

< IC >

IC301	8-759-087-59	IC CXA1785R
IC302	8-759-362-78	IC CXD2403R
IC903	8-759-351-40	IC M34E024FFV-G-GHD-GR

< COIL >

L801	1-412-961-11	INDUCTOR 10uH
L802	1-412-962-11	INDUCTOR 22uH
L804	1-412-951-11	INDUCTOR 10uH
L805	1-412-949-11	INDUCTOR 6.8uH
L806	1-412-959-11	INDUCTOR 47uH

< TRANSISTOR >

Q901	8-729-422-84	TRANSISTOR 2SA601
Q902	8-729-422-42	TRANSISTOR 2SK212

< RESISTOR >

R908	1-216-836-11	METAL CHIP	18K	5%	1/16W
R909	1-216-845-11	METAL CHIP	56K	5%	1/16W

The components identified by mark △ or dotted line with mark △ are critical for safety.
Replace only with part number specified.

Les composants identifiés par une marque △ sont critiques pour la sécurité.
Ne les remplacer que par une pièce portant le numéro spécifié.

Ref. No.	Part No.	Description				Remark
R904	1-216-857-11	METAL CHIP	1M	5%	1/16W	
R906	1-216-841-11	METAL CHIP	47K	5%	1/16W	
R907	1-216-833-11	METAL CHIP	10K	5%	1/16W	
R908	1-216-821-11	METAL CHIP	1K	5%	1/16W	
R910	1-216-814-11	METAL CHIP	270	5%	1/16W	
R911	1-216-864-11	METAL CHIP	0	5%	1/16W	
R912	1-216-821-11	METAL CHIP	1K	5%	1/16W	
R913	1-220-397-11	METAL GLAZE	4.7M	5%	1/16W	
R914	1-216-832-11	METAL CHIP	8.2K	5%	1/16W	
R919	1-216-839-11	METAL CHIP	33K	5%	1/16W	
R920	1-216-839-11	METAL CHIP	33K	5%	1/16W	
R921	1-216-857-11	METAL CHIP	1M	5%	1/16W	
R922	1-216-839-11	METAL CHIP	33K	5%	1/16W	
R923	1-216-839-11	METAL CHIP	33K	5%	1/16W	
R924	1-216-864-11	METAL CHIP	0	5%	1/16W	
R925	1-216-830-11	METAL CHIP	5.6K	5%	1/16W	
R926	1-216-832-11	METAL CHIP	8.2K	5%	1/16W	
R930	1-216-833-11	METAL CHIP	10K	5%	1/16W	
R931	1-216-839-11	METAL CHIP	33K	5%	1/16W	
R933	1-216-864-11	METAL CHIP	0	5%	1/16W	
R934	1-216-821-11	METAL CHIP	1K	5%	1/16W	
R936	1-218-873-11	METAL CHIP	12K	0.50%	1/16W	
R937	1-218-905-11	METAL CHIP	270K	0.50%	1/16W	
R938	1-216-849-11	METAL CHIP	220K	5%	1/16W	
R939	1-216-837-11	METAL CHIP	22K	5%	1/16W	
R946	1-216-839-11	METAL CHIP	33K	5%	1/16W	
R947	1-216-807-11	METAL CHIP	68	5%	1/16W	
R948	1-216-807-11	METAL CHIP	68	5%	1/16W	
R949	1-216-807-11	METAL CHIP	68	5%	1/16W	
R953	1-216-840-11	METAL CHIP	39K	5%	1/16W	
R954	1-216-840-11	METAL CHIP	39K	5%	1/16W	
R959	1-216-844-11	METAL CHIP	82K	5%	1/16W	
R960	1-216-845-11	METAL CHIP	100K	5%	1/16W	
R961	1-216-850-11	METAL CHIP	270K	5%	1/16W	
R969	1-216-839-11	METAL CHIP	33K	5%	1/16W	
R970	1-216-839-11	METAL CHIP	33K	5%	1/16W	
R971	1-216-844-11	METAL CHIP	82K	5%	1/16W	
R973	1-216-839-11	METAL CHIP	33K	5%	1/16W	
R974	1-216-839-11	METAL CHIP	33K	5%	1/16W	

< VIBRATOR >

X901	1-579-466-11	VIBRATOR, CRYSTAL (3.58MHz)				

****

Ref. No.	Part No.	Description	Remark
*	A-7063-959-A	VS-104 BOARD, COMPLETE (TR72) **********	
*	A-7066-008-A	VS-104 BOARD, COMPLETE (TR80) **********	
*	A-7066-079-A	VS-104 (H) BOARD, COMPLETE (TR400) **********	
*	A-7066-086-A	VS-104 BOARD, COMPLETE (TR430) **********	
*	A-7066-134-A	VS-104 (H) BOARD, COMPLETE (TR750) **********	
*	A-7063-953-A	VS-112 BOARD, COMPLETE (TR82) **********	
*	A-7066-019-A	VS-112 BOARD, COMPLETE (TR70) **********	
*	A-7066-047-A	VS-112 (LL) BOARD, COMPLETE (TR42) **********	
*	A-7066-085-A	VS-112 BOARD, COMPLETE (TR550) **********	

(Ref. No. 30,000 Series)

< CAPACITOR >

C101	1-162-921-11	CERAMIC CHIP	33PF	5%	50V	(TR42/TR70/TR72/TR80/TR82/TR430/TR550)
C102	1-162-911-11	CERAMIC CHIP	6PF	0.5PF	50V	(TR400/TR750)
C102	1-162-922-11	CERAMIC CHIP	39PF	5%	50V	(TR42/TR70/TR72/TR80/TR82/TR430/TR550)
C103	1-162-974-11	CERAMIC CHIP	0.01uF		50V	
C104	1-162-974-11	CERAMIC CHIP	0.01uF		50V	
C106	1-164-004-11	CERAMIC CHIP	0.1uF	10%	25V	
C107	1-162-927-11	CERAMIC CHIP	100PF	5%	50V	
C108	1-162-926-11	CERAMIC CHIP	82PF	5%	50V	
C109	1-164-227-11	CERAMIC CHIP	0.022uF	10%	25V	
C110	1-164-227-11	CERAMIC CHIP	0.022uF	10%	25V	
C111	1-162-974-11	CERAMIC CHIP	0.01uF		50V	
C112	1-162-927-11	CERAMIC CHIP	100PF	5%	50V	
C113	1-164-217-11	CERAMIC CHIP	150PF	5%	50V	
C114	1-164-360-11	CERAMIC CHIP	0.1uF		16V	
C115	1-162-974-11	CERAMIC CHIP	0.01uF		50V	
C116	1-164-360-11	CERAMIC CHIP	0.1uF		16V	
C117	1-104-852-11	TANTAL. CHIP	22uF	20%	6.3V	
C118	1-104-852-11	TANTAL. CHIP	22uF	20%	6.3V	
C119	1-162-961-11	CERAMIC CHIP	330PF	10%	50V	
C120	1-162-974-11	CERAMIC CHIP	0.01uF		50V	
C121	1-135-259-11	TANTAL. CHIP	10uF	20%	6.3V	
C122	1-162-961-11	CERAMIC CHIP	330PF	10%	50V	
C123	1-162-974-11	CERAMIC CHIP	0.01uF		50V	

Ref. No.	Part No.	Description				Remark
R904	1-216-857-11	METAL CHIP	1M	5%	1/16W	
R906	1-216-841-11	METAL CHIP	47K	5%	1/16W	
R907	1-216-833-11	METAL CHIP	10K	5%	1/16W	
R908	1-216-821-11	METAL CHIP	1K	5%	1/16W	
R910	1-216-814-11	METAL CHIP	270	5%	1/16W	
R911	1-216-864-11	METAL CHIP	0	5%	1/16W	
R912	1-216-821-11	METAL CHIP	1K	5%	1/16W	
R913	1-220-397-11	METAL GLAZE	4.7M	5%	1/16W	
R914	1-216-832-11	METAL CHIP	8.2K	5%	1/16W	
R919	1-216-839-11	METAL CHIP	33K	5%	1/16W	
R920	1-216-839-11	METAL CHIP	33K	5%	1/16W	
R921	1-216-857-11	METAL CHIP	1M	5%	1/16W	
R922	1-216-839-11	METAL CHIP	33K	5%	1/16W	
R923	1-216-839-11	METAL CHIP	33K	5%	1/16W	
R924	1-216-864-11	METAL CHIP	0	5%	1/16W	
R925	1-216-830-11	METAL CHIP	5.6K	5%	1/16W	
R928	1-216-832-11	METAL CHIP	8.2K	5%	1/16W	
R930	1-216-833-11	METAL CHIP	10K	5%	1/16W	
R931	1-216-839-11	METAL CHIP	33K	5%	1/16W	
R933	1-216-864-11	METAL CHIP	0	5%	1/16W	
R934	1-216-821-11	METAL CHIP	1K	5%	1/16W	
R936	1-218-672-11	METAL CHIP	12K	0.50%	1/16W	
R937	1-218-805-11	METAL CHIP	270K	0.50%	1/16W	
R938	1-216-840-11	METAL CHIP	39K	5%	1/16W	
R939	1-216-837-11	METAL CHIP	22K	5%	1/16W	
R946	1-216-839-11	METAL CHIP	33K	5%	1/16W	
R947	1-216-807-11	METAL CHIP	68	5%	1/16W	
R948	1-216-807-11	METAL CHIP	68	5%	1/16W	
R949	1-216-807-11	METAL CHIP	68	5%	1/16W	
R953	1-216-840-11	METAL CHIP	39K	5%	1/16W	
R954	1-216-840-11	METAL CHIP	39K	5%	1/16W	
R959	1-216-844-11	METAL CHIP	82K	5%	1/16W	
R960	1-216-845-11	METAL CHIP	100K	5%	1/16W	
R961	1-216-850-11	METAL CHIP	270K	5%	1/16W	
R969	1-216-839-11	METAL CHIP	33K	5%	1/16W	
R970	1-216-839-11	METAL CHIP	33K	5%	1/16W	
R971	1-216-844-11	METAL CHIP	82K	5%	1/16W	
R973	1-216-839-11	METAL CHIP	33K	5%	1/16W	
R974	1-216-839-11	METAL CHIP	33K	5%	1/16W	
		< VIBRATOR >				
X901	1-579-466-11	VIBRATOR, CRYSTAL (3.58MHz)				

****

Ref. No.	Part No.	Description				Remark
*	A-7063-868-A	VS-104 BOARD, COMPLETE (TR72) **********************				
*	A-7066-008-A	VS-104 BOARD, COMPLETE (TR80) **********************				
*	A-7066-079-A	VS-104 (H) BOARD, COMPLETE (TR400) **************************				
*	A-7069-088-A	VS-104 BOARD, COMPLETE (TR480) **********************				
*	A-7066-134-A	VS-104 (H) BOARD, COMPLETE (TR750) **************************				
*	A-7063-853-A	VS-112 BOARD, COMPLETE (TR82) **********************				
*	A-7096-019-A	VS-112 BOARD, COMPLETE (TR70) **********************				
*	A-7066-047-A	VS-112 (LL) BOARD, COMPLETE (TR42) **************************				
*	A-7066-085-A	VS-112 BOARD, COMPLETE (TR550) **********************				
		(Ref. No. 20,000 Series)				
		< CAPACITOR >				
C101	1-162-921-11	CERAMIC CHIP (TR42/TR70/TR72/TR80/TR82/TR480/TR550)	33PF	5%	50V	
C102	1-162-911-11	CERAMIC CHIP (TR400/TR750)	6PF	0.5PF	50V	
C102	1-162-922-11	CERAMIC CHIP (TR42/TR70/TR72/TR80/TR82/TR480/TR550)	39PF	5%	50V	
C103	1-163-974-11	CERAMIC CHIP	0.01uF		50V	
C104	1-163-974-11	CERAMIC CHIP	0.01uF		50V	
C106	1-164-004-11	CERAMIC CHIP	0.1uF	10%	25V	
C107	1-163-927-11	CERAMIC CHIP	100PF	5%	50V	
C108	1-163-929-11	CERAMIC CHIP	12PF	5%	50V	
C109	1-164-227-11	CERAMIC CHIP	0.022uF	10%	25V	
C110	1-164-227-11	CERAMIC CHIP	0.022uF	10%	25V	
C111	1-163-974-11	CERAMIC CHIP	0.01uF		50V	
C112	1-163-987-11	CERAMIC CHIP	100PF	5%	50V	
C113	1-164-897-11	CERAMIC CHIP	150PF	5%	50V	
C114	1-164-360-11	CERAMIC CHIP	0.1uF		16V	
C115	1-163-974-11	CERAMIC CHIP	0.01uF		50V	
C116	1-164-360-11	CERAMIC CHIP	0.1uF		16V	
C117	1-104-858-11	TANTAL. CHIP	22uF	20%	6.3V	
C118	1-104-858-11	TANTAL. CHIP	22uF	20%	6.3V	
C119	1-163-981-11	CERAMIC CHIP	330PF	10%	50V	
C120	1-163-974-11	CERAMIC CHIP	0.01uF		50V	
C121	1-135-259-11	TANTAL. CHIP	10uF	20%	6.3V	
C122	1-163-961-11	CERAMIC CHIP	330PF	10%	50V	
C123	1-163-974-11	CERAMIC CHIP	0.01uF		50V	

VS-104 VS-112

Ref. No.	Part No.	Description			Remark
C124	1-135-259-11	TANTAL. CHIP	10uF	20%	6.3V
C128	1-162-974-11	CERAMIC CHIP	0.01uF		50V
C131	1-162-974-11	CERAMIC CHIP	0.01uF		50V
C134	1-162-974-11	CERAMIC CHIP	0.01uF		50V
C136	1-162-974-11	CERAMIC CHIP	0.01uF		50V
C137	1-162-918-11	CERAMIC CHIP	18PF	5%	50V
C143	1-162-968-11	CERAMIC CHIP	0.0047uF	10%	50V
C144	1-164-227-11	CERAMIC CHIP	0.022uF	10%	25V
C145	1-104-852-11	TANTAL. CHIP	22uF	20%	6.3V
C146	1-164-360-11	CERAMIC CHIP	0.1uF		16V
C147	1-162-970-11	CERAMIC CHIP	0.01uF	10%	25V
C148	1-162-958-11	CERAMIC CHIP	270PF	5%	50V
C149	1-162-974-11	CERAMIC CHIP	0.01uF		50V
		(TR42/TR70/TR72/TR80/TR82/TR430/TR550)			
C150	1-162-974-11	CERAMIC CHIP	0.01uF		50V
		(TR42/TR70/TR72/TR80/TR82/TR430/TR550)			
C151	1-164-227-11	CERAMIC CHIP	0.022uF	10%	25V
		(TR42/TR70/TR72/TR80/TR82/TR430/TR550)			
C152	1-162-974-11	CERAMIC CHIP	0.01uF		50V
		(TR42/TR70/TR72/TR80/TR82/TR430/TR550)			
C153	1-162-970-11	CERAMIC CHIP	0.01uF	10%	25V
C154	1-162-945-11	CERAMIC CHIP	22PF	5%	50V
		(TR42/TR70/TR72/TR80/TR82/TR430/TR550)			
C155	1-162-974-11	CERAMIC CHIP	0.01uF		50V
					(TR400/TR750)
C157	1-162-918-11	CERAMIC CHIP	18PF	5%	50V
C158	1-164-227-11	CERAMIC CHIP	0.022uF	10%	25V
		(TR42/TR70/TR72/TR80/TR82/TR430/TR550)			
C159	1-162-922-11	CERAMIC CHIP	39PF	5%	50V
		(TR42/TR70/TR72/TR80/TR82/TR430/TR550)			
C160	1-162-946-11	CERAMIC CHIP	27PF	5%	50V
		(TR42/TR70/TR72/TR80/TR82/TR430/TR550)			
C161	1-162-966-11	CERAMIC CHIP	0.0022uF	10%	50V
C163	1-162-970-11	CERAMIC CHIP	0.01uF	10%	25V
		(TR42/TR70/TR72/TR80/TR82/TR430/TR550)			
C164	1-162-942-11	CERAMIC CHIP	12PF	5%	50V
		(TR42/TR70/TR72/TR80/TR82/TR430/TR550)			
C165	1-162-956-11	CERAMIC CHIP	180PF	5%	50V
		(TR42/TR70/TR72/TR80/TR82/TR430/TR550)			
C166	1-162-958-11	CERAMIC CHIP	270PF	5%	50V
C167	1-162-926-11	CERAMIC CHIP	82PF	5%	50V
		(TR72/TR80/TR400/TR430/TR750)			
C167	1-164-382-11	CERAMIC CHIP	91PF	5%	50V
					(TR42/TR70/TR82/TR550)
C168	1-164-227-11	CERAMIC CHIP	0.022uF	10%	25V
		(TR42/TR70/TR72/TR80/TR82/TR430/TR550)			
C169	1-162-949-11	CERAMIC CHIP	47PF	5%	50V
		(TR42/TR70/TR72/TR80/TR82/TR430/TR550)			
C170	1-162-915-11	CERAMIC CHIP	10PF	0.5PF	50V
					(TR400/TR750)
C171	1-162-927-11	CERAMIC CHIP	100PF	5%	50V
					(TR400/TR750)
C172	1-162-921-11	CERAMIC CHIP	33PF	5%	50V
		(TR42/TR70/TR72/TR80/TR82/TR430/TR550)			
C173	1-164-155-11	CERAMIC CHIP	75PF	5%	50V
					(TR400/TR750)
C175	1-162-915-11	CERAMIC CHIP	10PF	0.5PF	50V
					(TR400/TR750)
C176	1-162-921-11	CERAMIC CHIP	33PF	5%	50V
					(TR400/TR750)
C177	1-135-259-11	TANTAL. CHIP	10uF	20%	6.3V
C178	1-162-974-11	CERAMIC CHIP	0.01uF		50V
C179	1-162-974-11	CERAMIC CHIP	0.01uF		50V
C190	1-162-974-11	CERAMIC CHIP	0.01uF		50V
C202	1-162-944-11	CERAMIC CHIP	18PF	5%	50V
					(TR400/TR750)
C203	1-135-259-11	TANTAL. CHIP	10uF	20%	6.3V
C204	1-162-974-11	CERAMIC CHIP	0.01uF		50V
C205	1-162-974-11	CERAMIC CHIP	0.01uF		50V
		(TR42/TR72/TR82/TR430/TR550)			
C206	1-164-489-11	CERAMIC CHIP	0.22uF	10%	16V
C207	1-162-927-11	CERAMIC CHIP	100PF	5%	50V
C208	1-135-149-21	TANTALUM CHIP	2.2uF	20%	10V
C209	1-126-246-11	ELECT CHIP	220uF	20%	4V
C210	1-162-961-11	CERAMIC CHIP	330PF	10%	50V
C211	1-135-091-21	TANTAL. CHIP	1uF	20%	16V
C212	1-162-995-11	CERAMIC CHIP	0.022uF		50V
C213	1-135-176-21	TANTALUM CHIP	0.68uF	10%	20V
C214	1-164-005-11	CERAMIC CHIP	0.47uF		25V
C215	1-162-974-11	CERAMIC CHIP	0.01uF		50V
C216	1-135-259-11	TANTAL. CHIP	10uF	20%	6.3V
C217	1-135-091-21	TANTAL. CHIP	1uF	20%	16V
C218	1-164-005-11	CERAMIC CHIP	0.47uF		25V
C220	1-135-259-11	TANTAL. CHIP	10uF	20%	6.3V
C221	1-164-005-11	CERAMIC CHIP	0.47uF		25V
					(TR400/TR750)
C222	1-135-259-11	TANTAL. CHIP	10uF	20%	6.3V
C223	1-164-360-11	CERAMIC CHIP	0.1uF		16V
C225	1-162-970-11	CERAMIC CHIP	0.01uF	10%	25V
C226	1-162-926-11	CERAMIC CHIP	82PF	5%	50V
C227	1-135-259-11	TANTAL. CHIP	10uF	20%	6.3V
C228	1-162-974-11	CERAMIC CHIP	0.01uF		50V
C229	1-135-259-11	TANTAL. CHIP	10uF	20%	6.3V
C230	1-135-180-21	TANTALUM CHIP	3.3uF	20%	6.3V
C231	1-164-005-11	CERAMIC CHIP	0.47uF		25V
C234	1-162-957-11	CERAMIC CHIP	220PF	5%	50V
		(TR42/TR70/TR72/TR80/TR82/TR430/TR550)			
C234	1-164-471-11	CERAMIC CHIP	680PF	5%	50V
					(TR400/TR750)
C235	1-126-207-11	ELECT CHIP	33uF	20%	4V
C237	1-162-974-11	CERAMIC CHIP	0.01uF		50V
C238	1-135-259-11	TANTAL. CHIP	10uF	20%	6.3V
C239	1-162-974-11	CERAMIC CHIP	0.01uF		50V
C240	1-164-392-11	CERAMIC CHIP	390PF	5%	50V

Ref. No.	Part No.	Description				Remark
C124	1-135-250-11	TANTAL. CHIP	10uF	20%	6.3V	
C126	1-163-974-11	CERAMIC CHIP	0.01uF		50V	
C131	1-163-974-11	CERAMIC CHIP	0.01uF		50V	
C134	1-163-974-11	CERAMIC CHIP	0.01uF		50V	
C136	1-163-974-11	CERAMIC CHIP	0.01uF		50V	
C137	1-163-918-11	CERAMIC CHIP	18PF	5%	50V	
C143	1-163-968-11	CERAMIC CHIP	0.0047uF	10%	50V	
C144	1-164-827-11	CERAMIC CHIP	0.022uF	10%	25V	
C145	1-104-858-11	TANTAL. CHIP	22uF	20%	6.3V	
C146	1-164-889-11	CERAMIC CHIP	0.1uF		16V	
C147	1-163-975-11	CERAMIC CHIP	0.01uF	10%	25V	
C148	1-163-958-11	CERAMIC CHIP	270PF	5%	50V	
C149	1-163-974-11	CERAMIC CHIP	0.01uF		50V	
		(TR48/TR70/TR72/TR80/TR82/TR430/TR550)				
C150	1-163-974-11	CERAMIC CHIP	0.01uF		50V	
		(TR48/TR70/TR72/TR80/TR82/TR430/TR550)				
C151	1-164-827-11	CERAMIC CHIP	0.022uF	10%	25V	
		(TR48/TR70/TR72/TR80/TR82/TR430/TR550)				
C152	1-163-974-11	CERAMIC CHIP	0.01uF		50V	
		(TR48/TR70/TR72/TR80/TR82/TR430/TR550)				
C153	1-163-970-11	CERAMIC CHIP	0.01uF	10%	25V	
C154	1-163-945-11	CERAMIC CHIP	22PF	5%	50V	
		(TR48/TR70/TR72/TR80/TR82/TR430/TR550)				
C155	1-163-974-11	CERAMIC CHIP	0.01uF		50V	
					(TR400/TR750)	
C157	1-163-918-11	CERAMIC CHIP	18PF	5%	50V	
C158	1-164-827-11	CERAMIC CHIP	0.022uF	10%	25V	
		(TR48/TR70/TR72/TR80/TR82/TR430/TR550)				
C159	1-163-922-11	CERAMIC CHIP	39PF	5%	50V	
		(TR48/TR70/TR72/TR80/TR82/TR430/TR550)				
C160	1-163-946-11	CERAMIC CHIP	27PF	5%	50V	
		(TR48/TR70/TR72/TR80/TR82/TR430/TR550)				
C161	1-163-968-11	CERAMIC CHIP	0.0033uF	10%	50V	
C163	1-163-970-11	CERAMIC CHIP	0.01uF	10%	25V	
		(TR48/TR70/TR72/TR80/TR82/TR430/TR550)				
C164	1-163-943-11	CERAMIC CHIP	12PF	5%	50V	
		(TR48/TR70/TR72/TR80/TR82/TR430/TR550)				
C165	1-163-956-11	CERAMIC CHIP	180PF	5%	50V	
		(TR48/TR70/TR72/TR80/TR82/TR430/TR550)				
C166	1-163-958-11	CERAMIC CHIP	270PF	5%	50V	
C167	1-163-926-11	CERAMIC CHIP	68PF	5%	50V	
			(TR72/TR80/TR400/TR430/TR750)			
C167	1-164-862-11	CERAMIC CHIP	81PF	5%	50V	
			(TR48/TR70/TR82/TR550)			
C168	1-164-227-11	CERAMIC CHIP	0.022uF	10%	25V	
		(TR48/TR70/TR72/TR80/TR82/TR430/TR550)				
C169	1-163-949-11	CERAMIC CHIP	47PF	5%	50V	
		(TR48/TR70/TR72/TR80/TR82/TR430/TR550)				
C170	1-163-916-11	CERAMIC CHIP	10PF	0.5PF	50V	
					(TR400/TR750)	
C171	1-163-927-11	CERAMIC CHIP	100PF	5%	50V	
					(TR400/TR750)	

Ref. No.	Part No.	Description				Remark
C172	1-163-921-11	CERAMIC CHIP	56PF	5%	50V	
		(TR48/TR70/TR72/TR80/TR82/TR430/TR550)				
C173	1-164-165-11	CERAMIC CHIP	75PF	5%	50V	
					(TR400/TR750)	
C175	1-163-916-11	CERAMIC CHIP	10PF	0.5PF	50V	
					(TR400/TR750)	
C176	1-163-921-11	CERAMIC CHIP	33PF	5%	50V	
					(TR400/TR750)	
C177	1-135-259-11	TANTAL. CHIP	10uF	20%	6.3V	
C178	1-163-974-11	CERAMIC CHIP	0.01uF		50V	
C179	1-163-974-11	CERAMIC CHIP	0.01uF		50V	
C190	1-163-974-11	CERAMIC CHIP	0.01uF		50V	
C202	1-163-944-11	CERAMIC CHIP	18PF	5%	50V	
					(TR400/TR750)	
C203	1-135-259-11	TANTAL. CHIP	10uF	20%	6.3V	
C204	1-163-974-11	CERAMIC CHIP	0.01uF		50V	
C205	1-163-974-11	CERAMIC CHIP	0.01uF		50V	
		(TR48/TR72/TR82/TR430/TR550)				
C206	1-164-489-11	CERAMIC CHIP	0.33uF	10%	16V	
C207	1-163-927-11	CERAMIC CHIP	100PF	5%	50V	
C208	1-135-149-21	TANTALUM CHIP	2.2uF	20%	10V	
C209	1-139-248-11	ELECT CHIP	220uF	20%	4V	
C210	1-163-961-11	CERAMIC CHIP	330PF	10%	50V	
C211	1-135-081-21	TANTAL. CHIP	1uF	20%	16V	
C212	1-163-995-11	CERAMIC CHIP	0.022uF		50V	
C213	1-135-176-21	TANTALUM CHIP	0.68uF	10%	20V	
C214	1-164-005-11	CERAMIC CHIP	0.47uF		35V	
C215	1-163-974-11	CERAMIC CHIP	0.01uF		50V	
C216	1-135-259-11	TANTAL. CHIP	10uF	20%	6.3V	
C217	1-135-091-21	TANTAL. CHIP	1uF	20%	16V	
C218	1-164-005-11	CERAMIC CHIP	0.47uF		35V	
C220	1-135-259-11	TANTAL. CHIP	10uF	20%	6.3V	
C221	1-164-036-11	CERAMIC CHIP	0.47uF		35V	
					(TR400/TR750)	
C222	1-135-259-11	TANTAL. CHIP	10uF	20%	6.3V	
C223	1-164-860-11	CERAMIC CHIP	0.1uF		16V	
C225	1-163-970-11	CERAMIC CHIP	0.01uF	10%	25V	
C226	1-163-926-11	CERAMIC CHIP	68PF	5%	50V	
C227	1-135-259-11	TANTAL. CHIP	10uF	20%	6.3V	
C228	1-163-974-11	CERAMIC CHIP	0.01uF		50V	
C229	1-135-259-11	TANTAL. CHIP	10uF	20%	6.3V	
C230	1-135-180-21	TANTALUM CHIP	3.3uF	20%	6.3V	
C231	1-164-035-11	CERAMIC CHIP	0.47uF		35V	
C234	1-163-957-11	CERAMIC CHIP	220PF	5%	50V	
		(TR48/TR70/TR72/TR80/TR82/TR430/TR550)				
C234	1-164-471-11	CERAMIC CHIP	180PF	5%	50V	
					(TR400/TR750)	
C235	1-138-207-11	ELECT CHIP	33uF	20%	4V	
C237	1-163-974-11	CERAMIC CHIP	0.01uF		50V	
C238	1-135-259-11	TANTAL. CHIP	10uF	20%	6.3V	
C239	1-163-974-11	CERAMIC CHIP	0.01uF		50V	
C240	1-164-892-11	CERAMIC CHIP	390PF	5%	50V	

Ref. No.	Part No.	Description			Remark
C241	1-135-259-11	TANTAL. CHIP	10uF	20%	6.3V
C242	1-135-259-11	TANTAL. CHIP	10uF	20%	6.3V
C243	1-135-091-21	TANTAL. CHIP	1uF	20%	16V
C244	1-162-959-11	CERAMIC CHIP	330PF	5%	50V
C245	1-164-360-11	CERAMIC CHIP	0.1uF		16V
C247	1-162-974-11	CERAMIC CHIP	0.01uF		50V
C248	1-164-217-11	CERAMIC CHIP	150PF	5%	50V (TR400/TR750)
C250	1-164-217-11	CERAMIC CHIP	150PF	5%	50V (TR400/TR750)
C251	1-162-949-11	CERAMIC CHIP	47PF	5%	50V (TR400/TR750)
C251	1-162-956-11	CERAMIC CHIP	180PF	5%	50V (TR42/TR70/TR72/TR80/TR82/TR430/TR550)
C258	1-164-346-11	CERAMIC CHIP	1uF		16V
C262	1-162-974-11	CERAMIC CHIP	0.01uF		50V (TR42/TR70/TR72/TR80/TR82/TR430/TR550)
C263	1-162-974-11	CERAMIC CHIP	0.01uF		50V
C264	1-135-180-21	TANTALUM CHIP	3.3uF	20%	6.3V
C265	1-135-259-11	TANTAL. CHIP	10uF	20%	6.3V (TR42/TR70/TR72/TR80/TR82/TR430/TR550)
C266	1-162-974-11	CERAMIC CHIP	0.01uF		50V
C267	1-135-180-21	TANTALUM CHIP	3.3uF	20%	6.3V
C268	1-164-360-11	CERAMIC CHIP	0.1uF		16V
C271	1-162-974-11	CERAMIC CHIP	0.01uF		50V
C272	1-135-180-21	TANTALUM CHIP	3.3uF	20%	6.3V
C273	1-162-974-11	CERAMIC CHIP	0.01uF		50V
C274	1-135-259-11	TANTAL. CHIP	10uF	20%	6.3V
C275	1-162-955-11	CERAMIC CHIP	150PF	5%	50V (TR42/TR70/TR72/TR80/TR82/TR430/TR550)
C276	1-162-944-11	CERAMIC CHIP	18PF	5%	50V (TR42/TR70/TR72/TR80/TR82/TR430/TR550)
C278	1-162-949-11	CERAMIC CHIP	47PF	5%	50V
C279	1-164-145-11	CERAMIC CHIP	390PF	5%	50V (TR42/TR70/TR72/TR80/TR82/TR430/TR550)
C281	1-162-954-11	CERAMIC CHIP	120PF	5%	50V (TR42/TR70/TR72/TR80/TR82/TR430/TR550)
C282	1-162-927-11	CERAMIC CHIP	100PF	5%	50V (TR42/TR70/TR72/TR80/TR82/TR430/TR550)
C284	1-162-927-11	CERAMIC CHIP	100PF	5%	50V
C285	1-135-318-11	TANTAL. CHIP	33uF	20%	4V (TR42/TR70/TR72/TR80/TR82/TR430/TR550)
C286	1-135-259-11	TANTAL. CHIP	10uF	20%	6.3V
C287	1-162-949-11	CERAMIC CHIP	47PF	5%	50V (TR42/TR70/TR72/TR80/TR82/TR430/TR550)
C289	1-164-360-11	CERAMIC CHIP	0.1uF		16V
C290	1-162-974-11	CERAMIC CHIP	0.01uF		50V (TR42/TR70/TR72/TR80/TR82/TR430/TR550)
C291	1-162-949-11	CERAMIC CHIP	47PF	5%	50V (TR42/TR70/TR72/TR80/TR82/TR430/TR550)
C292	1-164-346-11	CERAMIC CHIP	1uF		16V (TR400/TR750)
C294	1-162-974-11	CERAMIC CHIP	0.01uF		50V (TR400/TR750)
C295	1-135-180-21	TANTALUM CHIP	3.3uF	20%	6.3V (TR400/TR750)
C296	1-162-974-11	CERAMIC CHIP	0.01uF		50V (TR400/TR750)
C297	1-135-180-21	TANTALUM CHIP	3.3uF	20%	6.3V (TR400/TR750)
C298	1-164-360-11	CERAMIC CHIP	0.1uF		16V (TR400/TR750)
C299	1-162-974-11	CERAMIC CHIP	0.01uF		50V (TR42/TR70/TR72/TR80/TR82/TR430/TR550)
C300	1-162-974-11	CERAMIC CHIP	0.01uF		50V (TR400/TR750)
C301	1-135-259-11	TANTAL. CHIP	10uF	20%	6.3V (TR42/TR70/TR72/TR80/TR82/TR430/TR550)
C302	1-135-180-21	TANTALUM CHIP	3.3uF	20%	6.3V (TR400/TR750)
C303	1-162-974-11	CERAMIC CHIP	0.01uF		50V (TR400/TR750)
C304	1-135-259-11	TANTAL. CHIP	10uF	20%	6.3V (TR400/TR750)
C305	1-135-259-11	TANTAL. CHIP	10uF	20%	6.3V (TR42/TR70/TR72/TR80/TR82/TR430/TR550)
C306	1-162-921-11	CERAMIC CHIP	33PF	5%	50V (TR400/TR750)
C307	1-162-974-11	CERAMIC CHIP	0.01uF		50V
C310	1-135-259-11	TANTAL. CHIP	10uF	20%	6.3V
C311	1-164-360-11	CERAMIC CHIP	0.1uF		16V (TR400/TR750)
C312	1-162-974-11	CERAMIC CHIP	0.01uF		50V
C319	1-164-360-11	CERAMIC CHIP	0.1uF		16V
C322	1-164-360-11	CERAMIC CHIP	0.1uF		16V (TR42/TR72/TR82/TR430/TR550)
C323	1-164-360-11	CERAMIC CHIP	0.1uF		16V (TR42/TR72/TR82/TR430/TR550)
C324	1-162-974-11	CERAMIC CHIP	0.01uF		50V (TR42/TR72/TR82/TR430/TR550)
C328	1-164-361-11	CERAMIC CHIP	0.047uF		16V
C331	1-162-974-11	CERAMIC CHIP	0.01uF		50V
C333	1-162-941-11	CERAMIC CHIP	10PF	0.5PF	50V
C334	1-162-935-11	CERAMIC CHIP	4PF	0.25PF	50V
C500	1-162-968-11	CERAMIC CHIP	0.0047uF	10%	50V
C501	1-164-360-11	CERAMIC CHIP	0.1uF		16V
C502	1-164-361-11	CERAMIC CHIP	0.047uF		16V
C503	1-124-778-00	ELECT CHIP	22uF	20%	6.3V
C504	1-162-974-11	CERAMIC CHIP	0.01uF		50V
C506	1-124-778-00	ELECT CHIP	22uF	20%	6.3V
C507	1-162-918-11	CERAMIC CHIP	18PF	5%	50V
C508	1-162-919-11	CERAMIC CHIP	22PF	5%	50V
C509	1-162-974-11	CERAMIC CHIP	0.01uF		50V
C510	1-164-360-11	CERAMIC CHIP	0.1uF		16V
C511	1-164-361-11	CERAMIC CHIP	0.047uF		16V

Ref.No.	Part No.	Description				Remark
C241	1-135-259-11	TANTAL. CHIP	10uF	20%	6.3V	
C242	1-135-259-11	TANTAL. CHIP	10uF	20%	6.3V	
C243	1-135-091-21	TANTAL. CHIP	1uF	20%	16V	
C244	1-163-959-11	CERAMIC CHIP	330PF	5%	50V	
C245	1-164-360-11	CERAMIC CHIP	0.1uF		16V	
C247	1-163-974-11	CERAMIC CHIP	0.01uF		50V	
C248	1-164-217-11	CERAMIC CHIP	150PF	5%	50V	(TR400/TR750)
C250	1-164-217-11	CERAMIC CHIP	150PF	5%	50V	(TR400/TR750)
C251	1-163-949-11	CERAMIC CHIP	47PF	5%	50V	(TR400/TR750)
C251	1-163-958-11	CERAMIC CHIP	180PF	5%	50V	(TR442/TR70/TR72/TR80/TR82/TR430/TR550)
C256	1-164-346-11	CERAMIC CHIP	1uF		16V	
C263	1-163-974-11	CERAMIC CHIP	0.01uF		50V	(TR442/TR70/TR72/TR80/TR82/TR430/TR550)
C263	1-163-974-11	CERAMIC CHIP	0.01uF		50V	
C264	1-135-180-21	TANTALUM CHIP	8.2uF	20%	6.3V	
C265	1-135-259-11	TANTAL. CHIP	10uF	20%	6.3V	(TR442/TR70/TR72/TR80/TR82/TR430/TR550)
C266	1-163-974-11	CERAMIC CHIP	0.01uF		50V	
C267	1-135-180-21	TANTALUM CHIP	3.3uF	20%	6.3V	
C268	1-164-360-11	CERAMIC CHIP	0.1uF		16V	
C271	1-163-974-11	CERAMIC CHIP	0.01uF		50V	
C272	1-135-180-21	TANTALUM CHIP	3.3uF	20%	6.3V	
C273	1-163-974-11	CERAMIC CHIP	0.01uF		50V	
C274	1-135-259-11	TANTAL. CHIP	10uF	20%	6.3V	
C275	1-163-955-11	CERAMIC CHIP	150PF	5%	50V	(TR442/TR70/TR72/TR80/TR82/TR430/TR550)
C276	1-163-944-11	CERAMIC CHIP	18PF	5%	50V	(TR442/TR70/TR72/TR80/TR82/TR430/TR550)
C278	1-163-949-11	CERAMIC CHIP	47PF	5%	50V	
C279	1-164-145-11	CERAMIC CHIP	330PF	5%	50V	(TR442/TR70/TR72/TR80/TR82/TR430/TR550)
C281	1-163-954-11	CERAMIC CHIP	130PF	5%	50V	(TR442/TR70/TR72/TR80/TR82/TR430/TR550)
C282	1-163-927-11	CERAMIC CHIP	100PF	5%	50V	(TR442/TR70/TR72/TR80/TR82/TR430/TR550)
C284	1-163-927-11	CERAMIC CHIP	100PF	5%	50V	(TR442/TR70/TR72/TR80/TR82/TR430/TR550)
C285	1-135-218-11	TANTAL. CHIP	33uF	20%	4V	(TR442/TR70/TR72/TR80/TR82/TR430/TR550)
C286	1-135-259-11	TANTAL. CHIP	10uF	20%	6.3V	
C287	1-163-949-11	CERAMIC CHIP	47PF	5%	50V	(TR442/TR70/TR72/TR80/TR82/TR430/TR550)
C289	1-164-360-11	CERAMIC CHIP	0.1uF		16V	
C290	1-163-974-11	CERAMIC CHIP	0.01uF		50V	(TR442/TR70/TR72/TR80/TR82/TR430/TR550)
C291	1-163-949-11	CERAMIC CHIP	47PF	5%	50V	(TR442/TR70/TR72/TR80/TR82/TR430/TR550)
C292	1-164-346-11	CERAMIC CHIP	1uF		16V	(TR400/TR750)
C294	1-163-974-11	CERAMIC CHIP	0.01uF		50V	(TR400/TR750)
C295	1-135-180-21	TANTALUM CHIP	3.3uF	20%	6.3V	(TR400/TR750)
C296	1-163-974-11	CERAMIC CHIP	0.01uF		50V	(TR400/TR750)
C297	1-135-180-21	TANTALUM CHIP	3.3uF	20%	6.3V	(TR400/TR750)
C298	1-164-360-11	CERAMIC CHIP	0.1uF		16V	(TR400/TR750)
C299	1-163-974-11	CERAMIC CHIP	0.01uF		50V	(TR442/TR70/TR72/TR80/TR82/TR430/TR550)
C300	1-163-974-11	CERAMIC CHIP	0.01uF		50V	(TR400/TR750)
C301	1-135-259-11	TANTAL. CHIP	10uF	20%	6.3V	(TR442/TR70/TR72/TR80/TR82/TR430/TR550)
C302	1-135-180-21	TANTALUM CHIP	3.3uF	20%	6.3V	(TR400/TR750)
C303	1-163-974-11	CERAMIC CHIP	0.01uF		50V	(TR400/TR750)
C304	1-135-259-11	TANTAL. CHIP	10uF	20%	6.3V	(TR400/TR750)
C305	1-135-259-11	TANTAL. CHIP	10uF	20%	6.3V	(TR442/TR70/TR72/TR80/TR82/TR430/TR550)
C306	1-163-921-11	CERAMIC CHIP	33PF	5%	50V	(TR400/TR750)
C307	1-163-974-11	CERAMIC CHIP	0.01uF		50V	
C310	1-135-259-11	TANTAL. CHIP	10uF	20%	6.3V	
C311	1-164-360-11	CERAMIC CHIP	0.1uF		16V	(TR400/TR750)
C312	1-163-974-11	CERAMIC CHIP	0.01uF		50V	
C313	1-164-360-11	CERAMIC CHIP	0.1uF		16V	
C322	1-164-360-11	CERAMIC CHIP	0.1uF		16V	(TR442/TR72/TR82/TR430/TR550)
C323	1-164-360-11	CERAMIC CHIP	0.1uF		16V	(TR442/TR72/TR82/TR430/TR550)
C324	1-163-974-11	CERAMIC CHIP	0.01uF		50V	(TR442/TR72/TR82/TR430/TR550)
C328	1-164-361-11	CERAMIC CHIP	0.047uF		16V	
C331	1-163-974-11	CERAMIC CHIP	0.01uF		50V	
C333	1-163-941-11	CERAMIC CHIP	10PF		0.5PF	50V
C334	1-163-925-11	CERAMIC CHIP	4PF		0.25PF	50V
C500	1-163-963-11	CERAMIC CHIP	0.0047uF	10%	50V	
C501	1-164-360-11	CERAMIC CHIP	0.1uF		16V	
C502	1-164-361-11	CERAMIC CHIP	0.047uF		16V	
C503	1-124-778-00	ELECT CHIP	22uF	20%	6.3V	
C504	1-163-974-11	CERAMIC CHIP	0.01uF		50V	
C506	1-124-778-00	ELECT CHIP	22uF	20%	6.3V	
C507	1-163-918-11	CERAMIC CHIP	18PF	5%	50V	
C508	1-163-919-11	CERAMIC CHIP	22PF	5%	50V	
C509	1-163-974-11	CERAMIC CHIP	0.01uF		50V	
C510	1-164-360-11	CERAMIC CHIP	0.1uF		16V	
C511	1-164-361-11	CERAMIC CHIP	0.047uF		16V	

Ref. No.	Part No.	Description			Remark
C512	1-164-360-11	CERAMIC CHIP	0.1uF		16V
C513	1-164-361-11	CERAMIC CHIP	0.047uF		16V
C514	1-162-974-11	CERAMIC CHIP	0.01uF		50V
C515	1-162-974-11	CERAMIC CHIP	0.01uF		50V
C516	1-164-361-11	CERAMIC CHIP	0.047uF		16V
C518	1-164-004-11	CERAMIC CHIP	0.1uF	10%	25V
C519	1-164-346-11	CERAMIC CHIP	1uF		16V
C521	1-164-004-11	CERAMIC CHIP	0.1uF	10%	25V
C522	1-164-361-11	CERAMIC CHIP	0.047uF		16V
C523	1-164-492-11	CERAMIC CHIP	0.15uF	10%	16V
C524	1-164-492-11	CERAMIC CHIP	0.15uF	10%	16V
C526	1-164-227-11	CERAMIC CHIP	0.022uF	10%	25V
C527	1-164-004-11	CERAMIC CHIP	0.1uF	10%	25V
C528	1-164-004-11	CERAMIC CHIP	0.1uF	10%	25V
C529	1-164-677-11	CERAMIC CHIP	0.033uF	10%	16V
C530	1-162-970-11	CERAMIC CHIP	0.01uF	10%	25V
C531	1-162-970-11	CERAMIC CHIP	0.01uF	10%	25V
C532	1-162-970-11	CERAMIC CHIP	0.01uF	10%	25V
C533	1-162-964-11	CERAMIC CHIP	0.001uF	10%	50V
C534	1-162-964-11	CERAMIC CHIP	0.001uF	10%	50V
C535	1-162-969-11	CERAMIC CHIP	0.0068uF	10%	25V
C536	1-162-969-11	CERAMIC CHIP	0.0068uF	10%	25V
C537	1-164-360-11	CERAMIC CHIP	0.1uF		16V
C538	1-162-995-11	CERAMIC CHIP	0.022uF		50V
C539	1-135-259-11	TANTAL. CHIP	10uF	20%	6.3V
C540	1-162-913-11	CERAMIC CHIP	8PF	0.5PF	50V
C541	1-164-360-11	CERAMIC CHIP	0.1uF		16V
C543	1-162-913-11	CERAMIC CHIP	8PF	0.5PF	50V
C544	1-162-974-11	CERAMIC CHIP	0.01uF		50V
C545	1-162-974-11	CERAMIC CHIP	0.01uF		50V
C547	1-164-360-11	CERAMIC CHIP	0.1uF		16V
C548	1-135-259-11	TANTAL. CHIP	10uF	20%	6.3V
C549	1-162-995-11	CERAMIC CHIP	0.022uF		50V
C550	1-128-530-11	ELECT CHIP	33uF	20%	10V
C552	1-164-362-11	CERAMIC CHIP	470PF	5%	50V
C559	1-135-259-11	TANTAL. CHIP	10uF	20%	6.3V
C560	1-135-259-11	TANTAL. CHIP	10uF	20%	6.3V
C561	1-128-004-11	ELECT CHIP	10uF	20%	16V
C562	1-162-974-11	CERAMIC CHIP	0.01uF		50V
C563	1-164-816-11	CERAMIC CHIP	220PF	2%	50V
C564	1-164-816-11	CERAMIC CHIP	220PF	2%	50V
C565	1-162-995-11	CERAMIC CHIP	0.022uF		50V
C566	1-162-995-11	CERAMIC CHIP	0.022uF		50V
C567	1-164-173-11	CERAMIC CHIP	0.0039uF	10%	50V
C568	1-162-974-11	CERAMIC CHIP	0.01uF		50V
C569	1-162-974-11	CERAMIC CHIP	0.01uF		50V
C570	1-165-176-11	CERAMIC CHIP	0.047uF	10%	16V
C571	1-164-004-11	CERAMIC CHIP	0.1uF	10%	25V
C572	1-135-259-11	TANTAL. CHIP	10uF	20%	6.3V
C573	1-162-909-11	CERAMIC CHIP	4PF	0.25PF	50V

Ref. No.	Part No.	Description			Remark
C951	1-164-156-11	CERAMIC CHIP	0.1uF		25V
C952	1-135-259-11	TANTAL. CHIP	10uF	20%	6.3V
C953	1-126-205-11	ELECT CHIP	47uF	20%	6.3V
C955	1-162-974-11	CERAMIC CHIP	0.01uF		50V
C959	1-164-156-11	CERAMIC CHIP	0.1uF		25V (TR42/TR72/TR82/TR430/TR550)
C961	1-164-346-11	CERAMIC CHIP	1uF		16V (TR42/TR72/TR82/TR430/TR550)
C1251	1-164-156-11	CERAMIC CHIP	0.1uF		25V (TR70/TR80/TR400/TR750)
C1252	1-164-505-11	CERAMIC CHIP	2.2uF		16V (TR70/TR80/TR400/TR750)
C1254	1-162-970-11	CERAMIC CHIP	0.01uF	10%	25V (TR400/TR750)
C1255	1-164-005-11	CERAMIC CHIP	0.47uF		25V (TR400/TR750)
C1256	1-164-005-11	CERAMIC CHIP	0.47uF		25V (TR70/TR80/TR400/TR750)
C1257	1-126-246-11	ELECT CHIP	220uF	20%	4V (TR400/TR750)
C1258	1-135-149-21	TANTALUM CHIP	2.2uF	20%	10V (TR400/TR750)
C1260	1-162-970-11	CERAMIC CHIP	0.01uF	10%	25V (TR400/TR750)
C1261	1-164-156-11	CERAMIC CHIP	0.1uF		25V (TR400/TR750)
C1262	1-135-259-11	TANTAL. CHIP	10uF	20%	6.3V (TR400/TR750)
C1263	1-135-259-11	TANTAL. CHIP	10uF	20%	6.3V (TR70/TR80/TR400/TR750)
C1264	1-164-156-11	CERAMIC CHIP	0.1uF		25V (TR70/TR80/TR400/TR750)
C1268	1-135-259-11	TANTAL. CHIP	10uF	20%	6.3V (TR70/TR80/TR400/TR750)
C1274	1-164-005-11	CERAMIC CHIP	0.47uF		25V (TR400/TR750)
C1275	1-162-945-11	CERAMIC CHIP	22PF	5%	50V (TR400/TR750)

< CONNECTOR >

CN101	1-691-492-21	CONNECTOR, FFC/FPC 13P	
CN102	1-580-789-11	PIN, CONNECTOR (SMD) 6P	
CN201	1-573-353-11	CONNECTOR, FFC/FPC 13P	
CN202	1-691-536-11	CONNECTOR, BOARD TO BOARD 24P	(TR42/TR70/TR82/TR550)
* CN202	1-691-929-11	CONNECTOR, BOARD TO BOARD 34P	(TR72/TR80/TR400/TR430/TR750)
* CN203	1-764-396-21	CONNECTOR, BOARD TO BOARD 42P	
* CN205	1-573-313-11	CONNECTOR, BOARD TO BOARD 26P	(TR400/TR750)
CN206	1-573-923-21	CONNECTOR, FFC/FPC (ZIF) 14P	
CN501	1-691-388-11	CONNECTOR, FFC/FPC (ZIF) 24P	(TR400/TR750)
* CN502	1-764-708-11	CONNECTOR, FFC/FPC (LIF) 9P	

Ref. No.	Part No.	Description			Remark
C512	1-164-980-11	CERAMIC CHIP	0.1uF		16V
C513	1-164-961-11	CERAMIC CHIP	0.047uF		16V
C514	1-162-974-11	CERAMIC CHIP	0.01uF		50V
C516	1-162-974-11	CERAMIC CHIP	0.01uF		50V
C516	1-164-961-11	CERAMIC CHIP	0.047uF		16V
C518	1-164-004-11	CERAMIC CHIP	0.1uF	10%	25V
C519	1-164-346-11	CERAMIC CHIP	1uF		16V
C521	1-164-004-11	CERAMIC CHIP	0.1uF	10%	25V
C522	1-164-961-11	CERAMIC CHIP	0.047uF		16V
C523	1-164-492-11	CERAMIC CHIP	0.15uF	10%	16V
C524	1-164-492-11	CERAMIC CHIP	0.15uF	10%	16V
C526	1-164-227-11	CERAMIC CHIP	0.022uF	10%	25V
C527	1-164-004-11	CERAMIC CHIP	0.1uF	10%	25V
C528	1-164-004-11	CERAMIC CHIP	0.1uF	10%	25V
C529	1-164-677-11	CERAMIC CHIP	0.033uF	10%	16V
C530	1-162-970-11	CERAMIC CHIP	0.01uF	10%	25V
C531	1-162-970-11	CERAMIC CHIP	0.01uF	10%	25V
C532	1-162-970-11	CERAMIC CHIP	0.01uF	10%	25V
C533	1-162-964-11	CERAMIC CHIP	0.001uF	10%	50V
C534	1-162-964-11	CERAMIC CHIP	0.001uF	10%	50V
C535	1-162-969-11	CERAMIC CHIP	0.0068uF	10%	25V
C536	1-162-969-11	CERAMIC CHIP	0.0068uF	10%	25V
C537	1-164-980-11	CERAMIC CHIP	0.1uF		16V
C538	1-162-995-11	CERAMIC CHIP	0.022uF		50V
C539	1-135-259-11	TANTAL. CHIP	10uF	20%	6.3V
C540	1-163-913-11	CERAMIC CHIP	8PF	0.5PF	50V
C541	1-164-960-11	CERAMIC CHIP	0.1uF		16V
C542	1-163-913-11	CERAMIC CHIP	8PF	0.5PF	50V
C544	1-162-974-11	CERAMIC CHIP	0.01uF		50V
C545	1-162-974-11	CERAMIC CHIP	0.01uF		50V
C547	1-164-980-11	CERAMIC CHIP	0.1uF		16V
C548	1-135-259-11	TANTAL. CHIP	10uF	20%	6.3V
C549	1-162-995-11	CERAMIC CHIP	0.022uF		50V
C550	1-128-530-11	ELECT CHIP	33uF	20%	10V
C552	1-164-942-11	CERAMIC CHIP	470PF	5%	50V
C559	1-135-259-11	TANTAL. CHIP	10uF	20%	6.3V
C560	1-135-259-11	TANTAL. CHIP	10uF	20%	6.3V
C561	1-128-024-11	ELECT CHIP	10uF	20%	16V
C562	1-162-974-11	CERAMIC CHIP	0.01uF		50V
C563	1-164-818-11	CERAMIC CHIP	820PF	5%	50V
C564	1-164-818-11	CERAMIC CHIP	820PF	5%	50V
C565	1-162-995-11	CERAMIC CHIP	0.022uF		50V
C566	1-162-995-11	CERAMIC CHIP	0.022uF		50V
C567	1-164-173-11	CERAMIC CHIP	0.0039uF	10%	50V
C568	1-162-974-11	CERAMIC CHIP	0.01uF		50V
C569	1-162-974-11	CERAMIC CHIP	0.01uF		50V
C570	1-165-176-11	CERAMIC CHIP	0.047uF	10%	16V
C571	1-164-024-11	CERAMIC CHIP	0.1uF	10%	25V
C572	1-135-259-11	TANTAL. CHIP	10uF	20%	6.3V
C573	1-162-909-11	CERAMIC CHIP	4PF	0.25PF	50V

Ref. No.	Part No.	Description			Remark
C574	1-164-156-11	CERAMIC CHIP	0.1uF		25V
C952	1-135-258-11	TANTAL. CHIP	10uF	20%	6.3V
C953	1-128-225-11	ELECT CHIP	47uF	20%	6.3V
C955	1-162-974-11	CERAMIC CHIP	0.01uF		50V
C959	1-164-156-11	CERAMIC CHIP	0.1uF		25V
			(TR42/TR72/TR82/TR430/TR550)		
C981	1-164-346-11	CERAMIC CHIP	1uF		16V
			(TR42/TR72/TR82/TR430/TR550)		
C1251	1-164-156-11	CERAMIC CHIP	0.1uF		25V
			(TR70/TR80/TR400/TR750)		
C1252	1-164-805-11	CERAMIC CHIP	2.2uF		16V
			(TR70/TR80/TR400/TR750)		
C1254	1-162-970-11	CERAMIC CHIP	0.01uF	10%	25V
			(TR400/TR750)		
C1255	1-164-005-11	CERAMIC CHIP	0.47uF		25V
			(TR400/TR750)		
C1256	1-164-005-11	CERAMIC CHIP	0.47uF		25V
			(TR70/TR80/TR400/TR750)		
C1257	1-128-248-11	ELECT CHIP	220uF	20%	4V
			(TR400/TR750)		
C1258	1-135-149-21	TANTALUM CHIP	2.2uF	20%	16V
			(TR400/TR750)		
C1260	1-162-970-11	CERAMIC CHIP	0.01uF	10%	25V
			(TR400/TR750)		
C1261	1-164-156-11	CERAMIC CHIP	0.1uF		25V
			(TR400/TR750)		
C1262	1-135-259-11	TANTAL. CHIP	10uF	20%	6.3V
			(TR400/TR750)		
C1263	1-135-259-11	TANTAL. CHIP	10uF	20%	6.3V
			(TR70/TR80/TR400/TR750)		
C1264	1-164-156-11	CERAMIC CHIP	0.1uF		25V
			(TR70/TR80/TR400/TR750)		
C1268	1-135-259-11	TANTAL. CHIP	10uF	20%	6.3V
			(TR70/TR80/TR400/TR750)		
C1274	1-164-005-11	CERAMIC CHIP	0.47uF		25V
			(TR400/TR750)		
C1275	1-163-945-11	CERAMIC CHIP	22PF	5%	50V
			(TR400/TR750)		

< CONNECTOR >

CN101	1-691-492-21	CONNECTOR, FFC/FPC 18P	
CN102	1-580-789-11	PIN, CONNECTOR (SMD) 8P	
CN201	1-573-853-11	CONNECTOR, FFC/FPC 13P	
CN202	1-691-536-11	CONNECTOR, BOARD TO BOARD 24P	
			(TR42/TR70/TR82/TR550)
* CN202	1-691-828-11	CONNECTOR, BOARD TO BOARD 24P	
			(TR72/TR80/TR400/TR430/TR750)
* CN203	1-784-386-21	CONNECTOR, BOARD TO BOARD 42P	
* CN205	1-573-313-11	CONNECTOR, BOARD TO BOARD 26P	
			(TR400/TR750)
CN208	1-573-823-21	CONNECTOR, FFC/FPC (ZIF) 14P	
CN501	1-691-588-11	CONNECTOR, FFC/FPC (ZIF) 24P	
			(TR400/TR750)
* CN502	1-764-708-11	CONNECTOR, FFC/FPC (LIF) 8P	

Ref. No.	Part No.	Description	Remark
* CN503	1-764-717-11	CONNECTOR, FFC/FPC (LIF) 18P	
CN504	1-695-325-11	CONNECTOR, BOARD TO BOARD 42P	
* CN505	1-764-397-21	CONNECTOR, BOARD TO BOARD 42P	
		< DIODE >	
D101	8-719-800-76	DIODE 1SS226 (TR42/TR70/TR72/TR80/TR82/TR430/TR550)	
D102	8-719-404-49	DIODE MA111	
D201	8-719-027-50	DIODE MA142WK	
D204	8-719-027-50	DIODE MA142WK	
D208	8-719-027-50	DIODE MA142WK	
D216	8-719-027-50	DIODE MA142WK	
D217	8-719-404-49	DIODE MA111	
D218	8-719-800-76	DIODE 1SS226	
D321	8-719-045-87	DIODE MA4Z082WA	
D323	8-719-017-25	DIODE 02DZ13-TPH3 (TR400/TR750)	
D324	8-719-017-25	DIODE 02DZ13-TPH3 (TR400/TR750)	
⚠D501	8-719-421-27	DIODE MA728	
D504	8-719-404-49	DIODE MA111	
D505	8-719-404-49	DIODE MA111	
D1251	8-719-027-50	DIODE MA142WK (TR400/TR750)	
D1252	8-719-027-50	DIODE MA142WK (TR400/TR750)	
D1253	8-719-045-87	DIODE MA4Z082WA (TR400/TR750)	
D1254	8-719-045-87	DIODE MA4Z082WA (TR400/TR750)	
D1255	8-719-017-25	DIODE 02DZ13-TPH3 (TR400/TR750)	
		< FILTER >	
FL201	1-236-757-21	FILTER, LOW PASS (C)	
FL202	1-236-773-21	FILTER, LOW PASS (Y) (TR400/TR750)	
		< IC >	
IC102	8-752-069-78	IC CXA1704R	
IC201	8-752-068-58	IC CXA1700R (TR42/TR70/TR72/TR80/TR82/TR430/TR550)	
IC201	8-752-069-22	IC CXA1810R (TR400/TR750)	
IC203	8-752-351-22	IC CXL5502N	
IC204	8-752-351-22	IC CXL5502N (TR400/TR750)	
IC205	8-752-053-21	IC CXA1211M	
IC207	8-759-031-58	IC SC7SU04F (TR400/TR750)	
IC208	8-759-710-07	IC NJM2234M (TR42/TR72/TR82/TR430/TR550)	
IC251	8-752-069-60	IC CXA1812Q-T4 (TR70/TR80/TR400/TR750)	
IC501	8-759-044-78	IC AK6420F-E1	
IC502	8-759-197-68	IC S-8423DFT	
IC503	8-759-267-67	IC MB89098PFV-G-107-BND	
IC505	8-752-851-37	IC CXP87132-009R	
IC506	8-759-169-11	IC CXA1575M-E2	
IC508	8-759-249-80	IC MB4470PFQ-G-BND-ER	
IC951	8-759-169-02	IC MB88344BPFV-G-BND-ER	

Ref. No.	Part No.	Description	Remark
		< COIL >	
L102	1-412-066-21	INDUCTOR CHIP 220uH	
L103	1-412-066-21	INDUCTOR CHIP 220uH	
L104	1-412-951-11	INDUCTOR 10uH	
L105	1-412-066-21	INDUCTOR CHIP 220uH	
L108	1-412-060-11	INDUCTOR CHIP 22uH	
L109	1-412-957-11	INDUCTOR 33uH	
L110	1-410-657-21	INDUCTOR CHIP 180uH (TR42/TR70/TR72/TR80/TR82/TR430/TR550)	
L111	1-412-950-11	INDUCTOR 8.2uH (TR42/TR70/TR72/TR80/TR82/TR430/TR550)	
L112	1-412-280-31	INDUCTOR 330uH	
L113	1-412-957-11	INDUCTOR 33uH (TR42/TR70/TR72/TR80/TR82/TR430/TR550)	
L114	1-412-282-41	INDUCTOR 470uH	
L115	1-412-280-31	INDUCTOR 330uH (TR42/TR70/TR72/TR80/TR82/TR430/TR550)	
L116	1-410-657-21	INDUCTOR CHIP 180uH	
L118	1-410-655-31	INDUCTOR CHIP 120uH (TR42/TR70/TR72/TR80/TR82/TR430/TR550)	
L119	1-412-953-11	INDUCTOR 15uH (TR400/TR750)	
L120	1-412-951-11	INDUCTOR 10uH (TR42/TR70/TR72/TR80/TR82/TR430/TR550)	
L121	1-412-951-11	INDUCTOR 10uH (TR400/TR750)	
L122	1-412-058-11	INDUCTOR CHIP 10uH	
L123	1-412-949-21	INDUCTOR 6.8uH (TR400/TR750)	
L201	1-412-963-11	INDUCTOR 100uH (TR400/TR750)	
L202	1-414-078-11	INDUCTOR 10uH	
L203	1-412-955-11	INDUCTOR 22uH	
L204	1-412-963-11	INDUCTOR 100uH (TR42/TR70/TR72/TR80/TR82/TR430/TR550)	
L207	1-412-945-11	INDUCTOR 3.3uH (TR42/TR70/TR72/TR80/TR82/TR430/TR550)	
L209	1-412-960-21	INDUCTOR 56uH (TR42/TR70/TR72/TR80/TR82/TR430/TR550)	
L213	1-412-953-11	INDUCTOR 15uH (TR42/TR70/TR72/TR80/TR82/TR430/TR550)	
L214	1-412-962-11	INDUCTOR 82uH (TR42/TR70/TR72/TR80/TR82/TR430/TR550)	
L500	1-414-078-11	INDUCTOR 10uH	
L501	1-414-078-11	INDUCTOR 10uH	
L502	1-414-072-11	INDUCTOR 1uH	
L503	1-412-961-11	INDUCTOR 68uH	
L504	1-414-078-11	INDUCTOR 10uH	
L506	1-414-078-11	INDUCTOR 10uH	
L951	1-414-078-11	INDUCTOR 10uH	
L952	1-414-072-11	INDUCTOR 1uH	
L1251	1-414-078-11	INDUCTOR 10uH (TR400/TR750)	
L1252	1-414-078-11	INDUCTOR 10uH (TR70/TR80/TR400/TR750)	
L1253	1-412-963-11	INDUCTOR 100uH (TR400/TR750)	

The components identified by mark ⚠ or dotted line with mark ⚠ are critical for safety. Replace only with part number specified.	Les composants identifiés par une marque ⚠ sont critiques pour la sécurité. Ne les remplacer que par une piéce portant le numéro spécifié.

Ref. No.	Part No.	Description	Remark
* CN503	1-764-717-11	CONNECTOR, FPC/FFC (LIF) 16P	
CN504	1-695-225-11	CONNECTOR, BOARD TO BOARD 42P	
* CN505	1-764-297-21	CONNECTOR, BOARD TO BOARD 42P	
		< DIODE >	
D101	8-719-800-78	DIODE 1SS226 (TR42/TR70/TR72/TR80/TR82/TR430/TR550)	
D103	8-719-404-49	DIODE MA111	
D201	8-719-027-50	DIODE MA142WK	
D204	8-719-027-50	DIODE MA142WK	
D208	8-719-027-50	DIODE MA142WK	
D216	8-719-027-50	DIODE MA142WK	
D217	8-719-404-49	DIODE MA111	
D218	8-719-800-78	DIODE 1SS226	
D321	8-719-046-87	DIODE MA2Z082WA	
D323	8-719-017-25	DIODE 02Z013-TP13 (TR400/TR750)	
D324	8-719-017-25	DIODE 02Z013-TP13 (TR400/TR750)	
⚠D601	8-719-421-27	DIODE MA732	
D604	8-719-404-49	DIODE MA111	
D606	8-719-404-49	DIODE MA111	
D1251	8-719-027-50	DIODE MA142WK (TR400/TR750)	
D1252	8-719-027-50	DIODE MA142WK (TR400/TR750)	
D1253	8-719-046-87	DIODE MA2Z082WA (TR400/TR750)	
D1254	8-719-046-87	DIODE MA2Z082WA (TR400/TR750)	
D1255	8-719-017-25	DIODE 02Z013-TP13 (TR400/TR750)	
		< FILTER >	
FL201	1-238-767-21	FILTER, LOW PASS (C)	
FL202	1-238-773-21	FILTER, LOW PASS (Y) (TR400/TR750)	
		< IC >	
IC102	8-752-068-78	IC CXA1704R	
IC201	8-752-068-68	IC CXA1700R (TR42/TR70/TR72/TR80/TR82/TR430/TR550)	
IC201	8-752-069-22	IC CXA1810R (TR400/TR750)	
IC203	8-752-051-22	IC CXL5502N	
IC204	8-752-051-22	IC CXL5502N (TR400/TR750)	
IC305	8-752-053-21	IC CXA1211N	
IC207	8-759-031-58	IC SC7SU04F (TR400/TR750)	
IC208	8-759-710-07	IC NJM2194M (TR42/TR72/TR82/TR430/TR550)	
IC251	8-752-089-80	IC CXA1812Q-T4 (TR70/TR80/TR400/TR750)	
IC501	8-759-044-78	IC AS6420F-E1	
IC502	8-759-187-68	IC S-84250FT	
IC503	8-759-287-67	IC MB86092PFV-G-101-BND	
IC505	8-752-051-57	IC CXP67122-0001	
IC506	8-759-169-11	IC CXA1575M-E4	
IC508	8-759-249-80	IC MB44T0FSQ-G-BND-ER	
IC951	8-759-189-02	IC MB88343PFV-G-BND-ER	

Ref. No.	Part No.	Description	Remark
		< COIL >	
L102	1-412-066-21	INDUCTOR CHIP 220nH	
L103	1-412-066-21	INDUCTOR CHIP 220nH	
L104	1-412-051-11	INDUCTOR 10nH	
L105	1-412-066-21	INDUCTOR CHIP 220nH	
L106	1-412-060-11	INDUCTOR CHIP 22nH	
L109	1-412-057-11	INDUCTOR 33nH	
L110	1-410-857-21	INDUCTOR CHIP 180nH (TR42/TR70/TR72/TR80/TR82/TR430/TR550)	
L111	1-418-950-11	INDUCTOR 2.2uH (TR42/TR70/TR72/TR80/TR82/TR430/TR550)	
L112	1-412-880-31	INDUCTOR 680uH	
L113	1-412-057-11	INDUCTOR 33nH (TR42/TR70/TR72/TR80/TR82/TR430/TR550)	
L114	1-412-262-41	INDUCTOR 470nH	
L115	1-412-280-81	INDUCTOR 330nH (TR42/TR70/TR72/TR80/TR82/TR430/TR550)	
L116	1-410-857-21	INDUCTOR CHIP 180nH	
L118	1-410-855-21	INDUCTOR CHIP 120nH (TR42/TR70/TR72/TR80/TR82/TR430/TR550)	
L119	1-412-959-11	INDUCTOR 15nH (TR400/TR750)	
L120	1-418-951-11	INDUCTOR 10uH (TR42/TR70/TR72/TR80/TR82/TR430/TR550)	
L121	1-412-951-11	INDUCTOR 10uH (TR400/TR750)	
L122	1-412-958-11	INDUCTOR CHIP 10nH	
L123	1-418-949-21	INDUCTOR 6.8uH (TR400/TR750)	
L201	1-418-953-11	INDUCTOR 100nH (TR400/TR750)	
L202	1-414-078-11	INDUCTOR 10nH	
L203	1-412-955-11	INDUCTOR 22nH	
L204	1-412-962-11	INDUCTOR 100nH (TR42/TR70/TR72/TR80/TR82/TR430/TR550)	
L207	1-412-945-11	INDUCTOR 3.3uH (TR42/TR70/TR72/TR80/TR82/TR430/TR550)	
L209	1-418-960-21	INDUCTOR 56uH (TR42/TR70/TR72/TR80/TR82/TR430/TR550)	
L213	1-412-953-11	INDUCTOR 15uH (TR42/TR70/TR72/TR80/TR82/TR430/TR550)	
L214	1-412-952-11	INDUCTOR 12uH (TR42/TR70/TR72/TR80/TR82/TR430/TR550)	
L500	1-414-078-11	INDUCTOR 10uH	
L501	1-414-078-11	INDUCTOR 10uH	
L502	1-414-072-11	INDUCTOR 1uH	
L503	1-412-963-11	INDUCTOR 68uH	
L504	1-414-078-11	INDUCTOR 10uH	
L506	1-414-078-11	INDUCTOR 10uH	
L951	1-414-078-11	INDUCTOR 10uH	
L952	1-414-072-11	INDUCTOR 1uH	
L1251	1-414-078-11	INDUCTOR 10uH (TR400/TR750)	
L1252	1-414-078-11	INDUCTOR 10uH (TR70/TR80/TR400/TR750)	
L1253	1-412-963-11	INDUCTOR 100uH (TR400/TR750)	

The components identified by mark ⚠ or dotted line with mark ⚠ are critical for safety.
Replace only with part number specified.

Les composants identifiés par une marque ⚠ sont critiques pour la sécurité.
Ne les remplacer que par une pièce portant le numéro spécifié.

Ref. No.	Part No.	Description	Remark
		< IC LINK >	
⚠PS500	1-576-122-21	LINK, IC CCP2E10 0.4A	
⚠PS501	1-576-122-21	LINK, IC CCP2E10 0.4A	
		< TRANSISTOR >	
Q101	8-729-905-23	TRANSISTOR 2SA1576	
Q102	8-729-420-24	TRANSISTOR 2SB1218A	
Q103	8-729-216-22	TRANSISTOR 2SA1162	
Q104	8-729-230-63	TRANSISTOR 2SC4116	
Q105	8-729-402-42	TRANSISTOR UN5213	
Q106	8-729-402-42	TRANSISTOR UN5213	
Q109	8-729-230-63	TRANSISTOR 2SC4116	
Q111	8-729-015-74	TRANSISTOR UN5111	(TR42/TR70/TR72/TR80/TR82/TR430/TR550)
Q112	8-729-117-73	TRANSISTOR 2SC4178	(TR42/TR70/TR72/TR80/TR82/TR430/TR550)
Q113	8-729-420-24	TRANSISTOR 2SB1218A	(TR42/TR70/TR72/TR80/TR82/TR430/TR550)
Q114	8-729-230-63	TRANSISTOR 2SC4116	
Q115	8-729-012-50	TRANSISTOR 2SC4400	(TR42/TR70/TR72/TR80/TR82/TR430/TR550)
Q116	8-729-012-50	TRANSISTOR 2SC4400 (TR400/TR750)	
Q117	8-729-230-63	TRANSISTOR 2SC4116	(TR42/TR70/TR72/TR80/TR82/TR430/TR550)
Q118	8-729-420-24	TRANSISTOR 2SB1218A (TR400/TR750)	
Q119	8-729-230-63	TRANSISTOR 2SC4116	(TR42/TR70/TR72/TR80/TR82/TR430/TR550)
Q120	8-729-402-42	TRANSISTOR UN5213 (TR400/TR750)	
Q121	8-729-012-50	TRANSISTOR 2SC4400 (TR400/TR750)	
Q124	8-729-230-63	TRANSISTOR 2SC4116 (TR400/TR750)	
Q125	8-729-402-42	TRANSISTOR UN5213 (TR400/TR750)	
Q126	8-729-230-63	TRANSISTOR 2SC4116	
Q129	8-729-230-63	TRANSISTOR 2SC4116	
Q132	8-729-230-63	TRANSISTOR 2SC4116	
Q133	8-729-012-50	TRANSISTOR 2SC4400	
Q134	8-729-402-42	TRANSISTOR UN5213	
Q135	8-729-402-42	TRANSISTOR UN5213	
Q202	8-729-420-24	TRANSISTOR 2SB1218A	
Q204	8-729-402-42	TRANSISTOR UN5213	
Q216	8-729-402-42	TRANSISTOR UN5213	
Q217	8-729-420-12	TRANSISTOR XN4213	(TR42/TR70/TR72/TR80/TR82/TR430/TR550)
Q219	8-729-230-63	TRANSISTOR 2SC4116	
Q221	8-729-013-15	TRANSISTOR 2SC4909 (TR400/TR750)	
Q222	8-729-403-35	TRANSISTOR UN5113 (TR400/TR750)	
Q223	8-729-013-15	TRANSISTOR 2SC4909 (TR400/TR750)	
Q224	8-729-402-42	TRANSISTOR UN5213 (TR400/TR750)	
Q225	8-729-015-76	TRANSISTOR UN5211	
Q226	8-729-807-86	TRANSISTOR 2SB1295	
Q227	8-729-402-42	TRANSISTOR UN5213	
Q228	8-729-807-86	TRANSISTOR 2SB1295	
Q232	8-729-420-24	TRANSISTOR 2SB1218A	(TR42/TR70/TR72/TR80/TR82/TR430/TR550)
Q234	8-729-230-63	TRANSISTOR 2SC4116	(TR42/TR70/TR72/TR80/TR82/TR430/TR550)
Q235	8-729-420-24	TRANSISTOR 2SB1218A	
Q236	8-729-230-63	TRANSISTOR 2SC4116	(TR42/TR70/TR72/TR80/TR82/TR430/TR550)
Q237	8-729-402-81	TRANSISTOR XN4501	
Q238	8-729-230-63	TRANSISTOR 2SC4116	(TR42/TR70/TR72/TR80/TR82/TR430/TR550)
Q240	8-729-230-63	TRANSISTOR 2SC4116	(TR42/TR70/TR72/TR80/TR82/TR430/TR550)
Q242	8-729-420-24	TRANSISTOR 2SB1218A	(TR42/TR70/TR72/TR80/TR82/TR430/TR550)
Q243	8-729-402-42	TRANSISTOR UN5213 (TR400/TR750)	
Q244	8-729-402-42	TRANSISTOR UN5213	
Q245	8-729-403-35	TRANSISTOR UN5113	(TR42/TR70/TR72/TR80/TR82/TR430/TR550)
Q246	8-729-402-81	TRANSISTOR XN4501	(TR42/TR70/TR72/TR80/TR82/TR430/TR550)
Q247	8-729-402-42	TRANSISTOR UN5213	(TR42/TR70/TR72/TR80/TR82/TR430/TR550)
Q248	8-729-420-24	TRANSISTOR 2SB1218A (TR400/TR750)	
Q249	8-729-230-63	TRANSISTOR 2SC4116 (TR400/TR750)	
Q253	8-729-025-16	TRANSISTOR UN511D	(TR42/TR70/TR72/TR80/TR82/TR430/TR550)
Q254	8-729-403-35	TRANSISTOR UN5113	
Q255	8-729-230-63	TRANSISTOR 2SC4116	
Q256	8-729-230-63	TRANSISTOR 2SC4116	(TR42/TR70/TR72/TR80/TR82/TR430/TR550)
Q257	8-729-230-63	TRANSISTOR 2SC4116	(TR42/TR70/TR72/TR80/TR82/TR430/TR550)
Q258	8-729-420-24	TRANSISTOR 2SB1218A	
Q259	8-729-230-63	TRANSISTOR 2SC4116	
Q260	8-729-230-63	TRANSISTOR 2SC4116	
Q261	8-729-230-63	TRANSISTOR 2SC4116	(TR42/TR72/TR82/TR430/TR550)
Q265	8-729-823-16	TRANSISTOR 2SC4555 (TR400/TR750)	
Q266	8-729-402-42	TRANSISTOR UN5213	(TR42/TR70/TR72/TR80/TR82/TR430/TR550)
Q267	8-729-230-63	TRANSISTOR 2SC4116	
Q500	8-729-420-24	TRANSISTOR 2SB1218A	(TR72/TR80/TR400/TR430/TR750)
Q501	8-729-403-27	TRANSISTOR XN4401	
Q502	8-729-120-28	TRANSISTOR 2SC1623	
Q503	8-729-402-81	TRANSISTOR XN4501	
Q504	8-729-120-28	TRANSISTOR 2SC1623	
Q506	8-729-402-42	TRANSISTOR UN5213	
Q507	8-729-120-28	TRANSISTOR 2SC1623	
Q951	8-729-101-07	TRANSISTOR 2SB798	
Q952	8-729-230-63	TRANSISTOR 2SC4116	
Q956	8-729-230-63	TRANSISTOR 2SC4116	

The components identified by mark ⚠ or dotted line with mark ⚠ are critical for safety. Replace only with part number specified.	Les composants identifiés par une marque ⚠ sont critiques pour la sécurité. Ne les remplacer que par une piéce portant le numéro spécifié.

Ref. No.	Part No.	Description	Remark
		< IC LINK >	
⚠PS500	1-576-122-81	LINK, IC CCP2810 0.4A	
⚠PS501	1-576-122-81	LINK, IC CCP2810 0.4A	
		< TRANSISTOR >	
Q101	8-729-905-23	TRANSISTOR 2SA1576	
Q108	8-729-420-24	TRANSISTOR 2SB1218A	
Q108	8-729-216-22	TRANSISTOR 2SA1162	
Q104	8-729-230-63	TRANSISTOR 2SC4116	
Q105	8-729-402-42	TRANSISTOR UN5213	
Q106	8-729-402-42	TRANSISTOR UN5213	
Q109	8-729-230-63	TRANSISTOR 2SC4116	
Q111	8-729-015-74	TRANSISTOR UN5111 (TR42/TR70/TR72/TR80/TR82/TR430/TR550)	
Q112	8-729-117-73	TRANSISTOR 2SC4178 (TR42/TR70/TR72/TR80/TR82/TR430/TR550)	
Q113	8-729-420-24	TRANSISTOR 2SB1218A (TR42/TR70/TR72/TR80/TR82/TR430/TR550)	
Q114	8-729-230-63	TRANSISTOR 2SC4116	
Q115	8-729-012-50	TRANSISTOR 2SC4400 (TR42/TR70/TR72/TR80/TR82/TR430/TR550)	
Q116	8-729-013-50	TRANSISTOR 2SC4400 (TR400/TR750)	
Q117	8-729-230-63	TRANSISTOR 2SC4116 (TR42/TR70/TR72/TR80/TR82/TR430/TR550)	
Q118	8-729-420-24	TRANSISTOR 2SB1218A (TR400/TR750)	
Q119	8-729-230-63	TRANSISTOR 2SC4116 (TR42/TR70/TR72/TR80/TR82/TR430/TR550)	
Q120	8-729-402-42	TRANSISTOR UN5213 (TR400/TR750)	
Q121	8-729-012-50	TRANSISTOR 2SC4400 (TR400/TR750)	
Q124	8-729-230-63	TRANSISTOR 2SC4116 (TR400/TR750)	
Q125	8-729-402-42	TRANSISTOR UN5213 (TR400/TR750)	
Q126	8-729-230-63	TRANSISTOR 2SC4116	
Q129	8-729-230-63	TRANSISTOR 2SC4116	
Q132	8-729-230-63	TRANSISTOR 2SC4116	
Q133	8-729-012-50	TRANSISTOR 2SC4400	
Q134	8-729-402-42	TRANSISTOR UN5213	
Q135	8-729-402-42	TRANSISTOR UN5213	
Q202	8-729-420-24	TRANSISTOR 2SB1218A	
Q204	8-729-402-42	TRANSISTOR UN5213	
Q216	8-729-402-42	TRANSISTOR UN5213	
Q217	8-729-420-12	TRANSISTOR XN4213 (TR42/TR70/TR72/TR80/TR82/TR430/TR550)	
Q219	8-729-230-63	TRANSISTOR 2SC4116	
Q221	8-729-013-15	TRANSISTOR 2SC4900 (TR400/TR750)	
Q222	8-729-403-35	TRANSISTOR UN5113 (TR400/TR750)	
Q223	8-729-013-15	TRANSISTOR 2SC4900 (TR400/TR750)	
Q224	8-729-402-42	TRANSISTOR UN5213 (TR400/TR750)	
Q225	8-729-015-76	TRANSISTOR UN5211	
Q236	8-729-807-86	TRANSISTOR 2SB1235	
Q237	8-729-402-42	TRANSISTOR UN5213	
Q238	8-729-807-86	TRANSISTOR 2SB1235	

Ref. No.	Part No.	Description	Remark
Q332	8-729-420-24	TRANSISTOR 2SB1218A (TR42/TR70/TR72/TR80/TR82/TR430/TR550)	
Q234	8-729-230-63	TRANSISTOR 2SC4116 (TR42/TR70/TR72/TR80/TR82/TR430/TR550)	
Q235	8-729-420-24	TRANSISTOR 2SB1218A	
Q236	8-729-230-63	TRANSISTOR 2SC4116 (TR42/TR70/TR72/TR80/TR82/TR430/TR550)	
Q237	8-729-402-81	TRANSISTOR XN4501	
Q238	8-729-230-63	TRANSISTOR 2SC4116 (TR42/TR70/TR72/TR80/TR82/TR430/TR550)	
Q240	8-729-230-63	TRANSISTOR *2SC4116 (TR42/TR70/TR72/TR80/TR82/TR430/TR550)	
Q242	8-729-420-24	TRANSISTOR 2SB1218A (TR42/TR70/TR72/TR80/TR82/TR430/TR550)	
Q243	8-729-402-42	TRANSISTOR UN5213 (TR400/TR750)	
Q244	8-729-402-42	TRANSISTOR UN5213	
Q245	8-729-404-35	TRANSISTOR UN5113 (TR42/TR70/TR72/TR80/TR82/TR430/TR550)	
Q246	8-729-402-81	TRANSISTOR XN4501 (TR42/TR70/TR72/TR80/TR82/TR430/TR550)	
Q247	8-729-402-42	TRANSISTOR UN5213 (TR42/TR70/TR72/TR80/TR82/TR430/TR550)	
Q248	8-729-420-24	TRANSISTOR 2SB1218A (TR400/TR750)	
Q249	8-729-230-63	TRANSISTOR 2SC4116 (TR400/TR750)	
Q253	8-729-025-16	TRANSISTOR UN511D (TR42/TR70/TR72/TR80/TR82/TR430/TR550)	
Q254	8-729-403-35	TRANSISTOR UN5113	
Q255	8-729-230-63	TRANSISTOR 2SC4116	
Q256	8-729-230-63	TRANSISTOR 2SC4116 (TR42/TR70/TR72/TR80/TR82/TR430/TR550)	
Q257	8-729-230-63	TRANSISTOR 2SC4116 (TR42/TR70/TR72/TR80/TR82/TR430/TR550)	
Q258	8-729-420-24	TRANSISTOR 2SB1218A	
Q259	8-729-230-63	TRANSISTOR 2SC4116	
Q260	8-729-230-63	TRANSISTOR 2SC4116	
Q261	8-729-230-63	TRANSISTOR 2SC4116 (TR42/TR72/TR82/TR430/TR550)	
Q265	8-729-823-16	TRANSISTOR 2SC4555 (TR400/TR750)	
Q266	8-729-402-42	TRANSISTOR UN5213 (TR42/TR70/TR72/TR80/TR82/TR430/TR550)	
Q267	8-729-230-63	TRANSISTOR 2SC4116	
Q500	8-729-420-24	TRANSISTOR 2SB1218A (TR72/TR80/TR400/TR430/TR750)	
Q501	8-729-403-37	TRANSISTOR UN4401	
Q502	8-729-120-28	TRANSISTOR 2SC1628	
Q503	8-729-402-81	TRANSISTOR XN4501	
Q504	8-729-120-28	TRANSISTOR 2SC1628	
Q506	8-729-402-42	TRANSISTOR UN5213	
Q507	8-729-120-28	TRANSISTOR 2SC1628	
Q951	8-729-101-07	TRANSISTOR 2SB796	
Q952	8-729-230-63	TRANSISTOR 2SC4116	
Q955	8-729-230-63	TRANSISTOR 2SC4116	

The components identified by mark ⚠ or dotted line with mark ⚠ are critical for safety. Replace only with part number specified.	Les composants identifiés par une marque ⚠ sont critiques pour la sécurité. Ne les remplacer que par une pièce portant le numéro spécifié.

Ref. No.	Part No.	Description	Remark
Q958	8-729-230-63	TRANSISTOR 2SC4116	(TR42/TR72/TR82/TR430/TR550)
Q960	8-729-230-63	TRANSISTOR 2SC4116	(TR42/TR72/TR82/TR430/TR550)
Q1252	8-729-402-42	TRANSISTOR UN5213	(TR400/TR750)
Q1253	8-729-823-16	TRANSISTOR 2SC4555	(TR400/TR750)
Q1254	8-729-823-16	TRANSISTOR 2SC4555	(TR400/TR750)
Q1257	8-729-420-24	TRANSISTOR 2SB1218A	(TR70/TR80)
Q1258	8-729-230-63	TRANSISTOR 2SC4116	(TR400/TR750)
Q1259	8-729-420-20	TRANSISTOR XN4312	(TR400/TR750)
		< RESISTOR >	
R101	1-216-864-11	METAL CHIP 0 5% 1/16W	
R102	1-216-837-11	METAL CHIP 22K 5% 1/16W	
R103	1-216-839-11	METAL CHIP 33K 5% 1/16W	
R104	1-216-815-11	METAL CHIP 330 5% 1/16W	(TR400/TR750)
R104	1-216-819-11	METAL CHIP 680 5% 1/16W	(TR42/TR70/TR72/TR80/TR82/TR430/TR550)
R105	1-216-816-11	METAL CHIP 390 5% 1/16W	(TR400/TR750)
R105	1-216-819-11	METAL CHIP 680 5% 1/16W	(TR42/TR70/TR72/TR80/TR82/TR430/TR550)
R106	1-216-814-11	METAL CHIP 270 5% 1/16W	
R107	1-216-813-11	METAL CHIP 220 5% 1/16W	
R108	1-216-800-11	METAL GLAZE 18 5% 1/16W	(TR42/TR70/TR72/TR80/TR82/TR430/TR550)
R108	1-216-801-11	METAL CHIP 22 5% 1/16W	(TR400/TR750)
R109	1-216-803-11	METAL CHIP 33 5% 1/16W	(TR400/TR750)
R109	1-216-804-11	METAL CHIP 39 5% 1/16W	(TR42/TR70/TR72/TR80/TR82/TR430/TR550)
R110	1-216-818-11	METAL CHIP 560 5% 1/16W	
R111	1-218-875-11	METAL CHIP 15K 0.50% 1/16W	
R112	1-216-836-11	METAL CHIP 18K 5% 1/16W	
R114	1-216-828-11	METAL CHIP 3.9K 5% 1/16W	(TR42/TR70/TR72/TR80/TR82/TR430/TR550)
R114	1-216-829-11	METAL CHIP 4.7K 5% 1/16W	(TR400/TR750)
R118	1-216-836-11	METAL CHIP 18K 5% 1/16W	
R119	1-216-864-11	METAL CHIP 0 5% 1/16W	
R120	1-216-831-11	METAL CHIP 6.8K 5% 1/16W	
R122	1-216-853-11	METAL CHIP 470K 5% 1/16W	
R123	1-216-833-11	METAL CHIP 10K 5% 1/16W	(TR72/TR80/TR400/TR430/TR750)
R123	1-216-836-11	METAL CHIP 18K 5% 1/16W	(TR42/TR70/TR82/TR550)
R124	1-216-864-11	METAL CHIP 0 5% 1/16W	
R126	1-216-837-11	METAL CHIP 22K 5% 1/16W	
R127	1-216-837-11	METAL CHIP 22K 5% 1/16W	
R128	1-216-825-11	METAL CHIP 2.2K 5% 1/16W	
R130	1-216-823-11	METAL CHIP 1.5K 5% 1/16W	(TR42/TR70/TR72/TR80/TR82/TR430/TR550)
R132	1-216-823-11	METAL CHIP 1.5K 5% 1/16W	(TR42/TR70/TR72/TR80/TR82/TR430/TR550)
R133	1-216-819-11	METAL CHIP 680 5% 1/16W	
R134	1-216-834-11	METAL CHIP 12K 5% 1/16W	(TR42/TR70/TR72/TR80/TR82/TR430/TR550)
R135	1-216-833-11	METAL CHIP 10K 5% 1/16W	(TR42/TR70/TR72/TR80/TR82/TR430/TR550)
R136	1-216-820-11	METAL CHIP 820 5% 1/16W	(TR42/TR70/TR72/TR80/TR82/TR430/TR550)
R137	1-216-821-11	METAL CHIP 1K 5% 1/16W	(TR42/TR70/TR72/TR80/TR82/TR430/TR550)
R138	1-216-835-11	METAL CHIP 15K 5% 1/16W	
R139	1-216-839-11	METAL CHIP 33K 5% 1/16W	
R140	1-216-813-11	METAL CHIP 220 5% 1/16W	
R141	1-216-817-11	METAL CHIP 470 5% 1/16W	(TR42/TR70/TR72/TR80/TR82/TR430/TR550)
R142	1-216-818-11	METAL CHIP 560 5% 1/16W	(TR42/TR70/TR72/TR80/TR82/TR430/TR550)
R143	1-216-808-11	METAL CHIP 82 5% 1/16W	(TR42/TR70/TR72/TR80/TR82/TR430/TR550)
R144	1-216-818-11	METAL CHIP 560 5% 1/16W	
R146	1-216-809-11	METAL CHIP 100 5% 1/16W	(TR42/TR70/TR72/TR80/TR82/TR430/TR550)
R147	1-216-864-11	METAL CHIP 0 5% 1/16W	(TR42/TR70/TR72/TR80/TR82/TR430/TR550)
R148	1-216-813-11	METAL CHIP 220 5% 1/16W	(TR42/TR70/TR72/TR80/TR82/TR430/TR550)
R149	1-216-813-11	METAL CHIP 220 5% 1/16W	(TR42/TR70/TR72/TR80/TR82/TR430/TR550)
R150	1-216-829-11	METAL CHIP 4.7K 5% 1/16W	
R151	1-216-823-11	METAL CHIP 1.5K 5% 1/16W	(TR42/TR70/TR72/TR80/TR82/TR430/TR550)
R152	1-216-824-11	METAL CHIP 1.8K 5% 1/16W	(TR42/TR70/TR72/TR80/TR82/TR430/TR550)
R153	1-216-830-11	METAL CHIP 5.6K 5% 1/16W	(TR42/TR70/TR82/TR550)
R153	1-216-833-11	METAL CHIP 10K 5% 1/16W	(TR72/TR80/TR400/TR430/TR750)
R154	1-216-821-11	METAL CHIP 1K 5% 1/16W	(TR42/TR70/TR72/TR80/TR82/TR430/TR550)
R155	1-216-820-11	METAL CHIP 820 5% 1/16W	(TR400/TR750)
R156	1-216-817-11	METAL CHIP 470 5% 1/16W	(TR400/TR750)
R157	1-216-817-11	METAL CHIP 470 5% 1/16W	(TR400/TR750)
R158	1-216-836-11	METAL CHIP 18K 5% 1/16W	(TR42/TR70/TR72/TR80/TR82/TR430/TR550)
R159	1-216-836-11	METAL CHIP 18K 5% 1/16W	(TR42/TR70/TR72/TR80/TR82/TR430/TR550)
R160	1-216-818-11	METAL CHIP 560 5% 1/16W	(TR42/TR70/TR72/TR80/TR82/TR430/TR550)

Ref. No.	Part No.	Description	Remark
Q958	8-729-230-63	TRANSISTOR 2SC4116 (TR42/TR72/TR82/TR430/TR550)	
Q960	8-729-230-63	TRANSISTOR 2SC4116 (TR42/TR72/TR82/TR430/TR550)	
Q1252	8-729-402-42	TRANSISTOR DTA213 (TR400/TR750)	
Q1253	8-729-828-16	TRANSISTOR 2SC4555 (TR400/TR750)	
Q1254	8-729-823-16	TRANSISTOR 2SC4555 (TR400/TR750)	
Q1257	8-729-420-24	TRANSISTOR 2SB1216A (TR70/TR80)	
Q1258	8-729-230-63	TRANSISTOR 2SC4116 (TR400/TR750)	
Q1259	8-729-420-20	TRANSISTOR DTA113 (TR400/TR750)	
		< RESISTOR >	
R101	1-216-864-11	METAL CHIP 0 5% 1/16W (TR42/TR70/TR72/TR80/TR82/TR430/TR550)	
R102	1-216-837-11	METAL CHIP 22K 5% 1/16W	
R103	1-216-889-11	METAL CHIP 33K 5% 1/16W	
R104	1-216-815-11	METAL CHIP 220 5% 1/16W (TR400/TR750)	
R104	1-216-819-11	METAL CHIP 680 5% 1/16W (TR42/TR70/TR72/TR80/TR82/TR430/TR550)	
R105	1-216-819-11	METAL CHIP 390 5% 1/16W (TR400/TR750)	
R105	1-216-819-11	METAL CHIP 680 5% 1/16W (TR42/TR70/TR72/TR80/TR82/TR430/TR550)	
R106	1-216-814-11	METAL CHIP 270 5% 1/16W	
R107	1-216-818-11	METAL CHIP 220 5% 1/16W	
R108	1-216-800-11	METAL GLAZE 10 5% 1/16W (TR42/TR70/TR72/TR80/TR82/TR430/TR550)	
R108	1-216-801-11	METAL CHIP 22 5% 1/16W (TR400/TR750)	
R109	1-216-808-11	METAL CHIP 33 5% 1/16W (TR400/TR750)	
R109	1-216-804-11	METAL CHIP 10 5% 1/16W (TR42/TR70/TR72/TR80/TR82/TR430/TR550)	
R110	1-216-818-11	METAL CHIP 560 5% 1/16W	
R111	1-216-875-11	METAL CHIP 15K 0.50% 1/16W	
R112	1-216-836-11	METAL CHIP 18K 5% 1/16W	
R114	1-216-828-11	METAL CHIP 3.9K 5% 1/16W (TR42/TR70/TR72/TR80/TR82/TR430/TR550)	
R114	1-216-829-11	METAL CHIP 4.7K 5% 1/16W (TR400/TR750)	
R118	1-216-836-11	METAL CHIP 18K 5% 1/16W	
R119	1-216-864-11	METAL CHIP 0 5% 1/16W	
R120	1-216-831-11	METAL CHIP 8.2K 5% 1/16W	
R122	1-216-853-11	METAL CHIP 470K 5% 1/16W	
R123	1-216-835-11	METAL CHIP 10K 5% 1/16W (TR78/TR80/TR400/TR480/TR750)	
R123	1-216-836-11	METAL CHIP 18K 5% 1/16W (TR42/TR70/TR82/TR550)	
R124	1-216-864-11	METAL CHIP 0 5% 1/16W	
R126	1-216-837-11	METAL CHIP 22K 5% 1/16W	
R127	1-216-837-11	METAL CHIP 22K 5% 1/16W	
R128	1-216-825-11	METAL CHIP 2.2K 5% 1/16W	
R130	1-216-823-11	METAL CHIP 1.5K 5% 1/16W (TR42/TR70/TR72/TR80/TR82/TR430/TR550)	
R132	1-216-823-11	METAL CHIP 1.5K 5% 1/16W (TR42/TR70/TR72/TR80/TR82/TR430/TR550)	
R133	1-216-819-11	METAL CHIP 680 5% 1/16W	
R134	1-216-834-11	METAL CHIP 12K 5% 1/16W (TR42/TR70/TR72/TR80/TR82/TR430/TR550)	
R135	1-216-839-11	METAL CHIP 10K 5% 1/16W (TR42/TR70/TR72/TR80/TR82/TR430/TR550)	
R136	1-216-820-11	METAL CHIP 820 5% 1/16W (TR42/TR70/TR72/TR80/TR82/TR430/TR550)	
R137	1-216-821-11	METAL CHIP 1K 5% 1/16W (TR42/TR70/TR72/TR80/TR82/TR430/TR550)	
R138	1-216-835-11	METAL CHIP 15K 5% 1/16W	
R139	1-216-839-11	METAL CHIP 33K 5% 1/16W	
R140	1-216-813-11	METAL CHIP 220 5% 1/16W	
R141	1-216-817-11	METAL CHIP 470 5% 1/16W (TR42/TR70/TR72/TR80/TR82/TR430/TR550)	
R142	1-216-818-11	METAL CHIP 560 5% 1/16W (TR42/TR70/TR72/TR80/TR82/TR430/TR550)	
R143	1-216-808-11	METAL CHIP 82 5% 1/16W (TR42/TR70/TR72/TR80/TR82/TR430/TR550)	
R144	1-216-818-11	METAL CHIP 560 5% 1/16W	
R146	1-216-809-11	METAL CHIP 100 5% 1/16W (TR42/TR70/TR72/TR80/TR82/TR430/TR550)	
R147	1-216-884-11	METAL CHIP 0 5% 1/16W (TR42/TR70/TR72/TR80/TR82/TR430/TR550)	
R148	1-216-813-11	METAL CHIP 220 5% 1/16W (TR42/TR70/TR72/TR80/TR82/TR430/TR550)	
R149	1-216-813-11	METAL CHIP 220 5% 1/16W (TR42/TR70/TR72/TR80/TR82/TR430/TR550)	
R150	1-216-829-11	METAL CHIP 4.7K 5% 1/16W	
R151	1-216-823-11	METAL CHIP 1.5K 5% 1/16W (TR42/TR70/TR72/TR80/TR82/TR430/TR550)	
R152	1-216-824-11	METAL CHIP 1.8K 5% 1/16W (TR42/TR70/TR72/TR80/TR82/TR430/TR550)	
R153	1-216-830-11	METAL CHIP 5.6K 5% 1/16W (TR42/TR70/TR82/TR550)	
R153	1-216-833-11	METAL CHIP 10K 5% 1/16W (TR72/TR80/TR400/TR430/TR750)	
R154	1-216-821-11	METAL CHIP 1K 5% 1/16W (TR42/TR70/TR72/TR80/TR82/TR430/TR550)	
R155	1-216-820-11	METAL CHIP 820 5% 1/16W (TR400/TR750)	
R156	1-216-817-11	METAL CHIP 470 5% 1/16W (TR400/TR750)	
R157	1-216-817-11	METAL CHIP 470 5% 1/16W (TR400/TR750)	
R158	1-216-836-11	METAL CHIP 18K 5% 1/16W (TR42/TR70/TR72/TR80/TR82/TR430/TR550)	
R159	1-216-836-11	METAL CHIP 18K 5% 1/16W (TR42/TR70/TR72/TR80/TR82/TR430/TR550)	
R160	1-216-818-11	METAL CHIP 560 5% 1/16W (TR42/TR70/TR72/TR80/TR82/TR430/TR550)	

Ref. No.	Part No.	Description				Remark
R161	1-216-817-11	METAL CHIP	470	5%	1/16W	(TR400/TR750)
R162	1-216-818-11	METAL CHIP	560	5%	1/16W	(TR42/TR70/TR72/TR80/TR82/TR430/TR550)
R163	1-216-821-11	METAL CHIP	1K	5%	1/16W	(TR42/TR70/TR72/TR80/TR82/TR430/TR550)
R164	1-216-864-11	METAL CHIP	0	5%	1/16W	(TR42/TR70/TR72/TR80/TR82/TR430/TR550)
R165	1-216-821-11	METAL CHIP	1K	5%	1/16W	(TR42/TR70/TR72/TR80/TR82/TR430/TR550)
R166	1-216-816-11	METAL CHIP	390	5%	1/16W	(TR42/TR70/TR72/TR80/TR82/TR430/TR550)
R167	1-216-821-11	METAL CHIP	1K	5%	1/16W	(TR400/TR750)
R168	1-216-815-11	METAL CHIP	330	5%	1/16W	(TR400/TR750)
R169	1-216-816-11	METAL CHIP	390	5%	1/16W	(TR400/TR750)
R170	1-216-822-11	METAL CHIP	1.2K	5%	1/16W	(TR400/TR750)
R171	1-216-823-11	METAL CHIP	1.5K	5%	1/16W	(TR42/TR70/TR72/TR80/TR82/TR430/TR550)
R173	1-216-828-11	METAL CHIP	3.9K	5%	1/16W	(TR400/TR750)
R174	1-216-816-11	METAL CHIP	390	5%	1/16W	(TR400/TR750)
R175	1-216-821-11	METAL CHIP	1K	5%	1/16W	
R178	1-216-809-11	METAL CHIP	100	5%	1/16W	
R179	1-216-825-11	METAL CHIP	2.2K	5%	1/16W	
R180	1-216-809-11	METAL CHIP	100	5%	1/16W	
R181	1-216-821-11	METAL CHIP	1K	5%	1/16W	
R182	1-216-864-11	METAL CHIP	0	5%	1/16W	(TR400/TR750)
R185	1-216-847-11	METAL CHIP	150K	5%	1/16W	
R186	1-216-837-11	METAL CHIP	22K	5%	1/16W	
R187	1-216-837-11	METAL CHIP	22K	5%	1/16W	
R188	1-216-837-11	METAL CHIP	22K	5%	1/16W	
R189	1-216-837-11	METAL CHIP	22K	5%	1/16W	
R190	1-216-817-11	METAL CHIP	470	5%	1/16W	(TR400/TR750)
R191	1-216-815-11	METAL CHIP	330	5%	1/16W	(TR400/TR750)
R193	1-216-815-11	METAL CHIP	330	5%	1/16W	
R194	1-216-818-11	METAL CHIP	560	5%	1/16W	
R195	1-216-839-11	METAL CHIP	33K	5%	1/16W	
R196	1-216-836-11	METAL CHIP	18K	5%	1/16W	
R197	1-216-864-11	METAL CHIP	0	5%	1/16W	
R198	1-216-864-11	METAL CHIP	0	5%	1/16W	(TR70/TR80)
R199	1-216-864-11	METAL CHIP	0	5%	1/16W	(TR70/TR80)
R200	1-216-864-11	METAL CHIP	0	5%	1/16W	(TR400/TR750)
R201	1-216-829-11	METAL CHIP	4.7K	5%	1/16W	
R202	1-216-832-11	METAL CHIP	8.2K	5%	1/16W	
R203	1-216-829-11	METAL CHIP	4.7K	5%	1/16W	
R205	1-216-864-11	METAL CHIP	0	5%	1/16W	
R206	1-216-817-11	METAL CHIP	470	5%	1/16W	(TR400/TR750)
R206	1-216-864-11	METAL CHIP	0	5%	1/16W	(TR42/TR70/TR72/TR80/TR82/TR430/TR550)
R207	1-216-804-11	METAL CHIP	39	5%	1/16W	
R208	1-216-821-11	METAL CHIP	1K	5%	1/16W	(TR400/TR750)
R209	1-216-814-11	METAL CHIP	270	5%	1/16W	
R210	1-216-821-11	METAL CHIP	1K	5%	1/16W	
R211	1-216-803-11	METAL CHIP	33	5%	1/16W	
R213	1-216-833-11	METAL CHIP	10K	5%	1/16W	
R214	1-216-828-11	METAL CHIP	3.9K	5%	1/16W	
R215	1-216-819-11	METAL CHIP	680	5%	1/16W	
R216	1-216-825-11	METAL CHIP	2.2K	5%	1/16W	
R218	1-216-821-11	METAL CHIP	1K	5%	1/16W	
R219	1-216-831-11	METAL CHIP	6.8K	5%	1/16W	
R220	1-216-829-11	METAL CHIP	4.7K	5%	1/16W	(TR42/TR72/TR82/TR430/TR550)
R221	1-216-829-11	METAL CHIP	4.7K	5%	1/16W	(TR42/TR72/TR82/TR430/TR550)
R222	1-216-829-11	METAL CHIP	4.7K	5%	1/16W	(TR42/TR72/TR82/TR430/TR550)
R223	1-216-833-11	METAL CHIP	10K	5%	1/16W	(TR42/TR72/TR82/TR430/TR550)
R224	1-216-829-11	METAL CHIP	4.7K	5%	1/16W	
R226	1-216-831-11	METAL CHIP	6.8K	5%	1/16W	
R230	1-216-830-11	METAL CHIP	5.6K	5%	1/16W	
R231	1-216-833-11	METAL CHIP	10K	5%	1/16W	
R232	1-216-830-11	METAL CHIP	5.6K	5%	1/16W	
R234	1-216-864-11	METAL CHIP	0	5%	1/16W	
R235	1-218-877-11	METAL CHIP	18K	0.50%	1/16W	
R241	1-216-833-11	METAL CHIP	10K	5%	1/16W	
R245	1-216-829-11	METAL CHIP	4.7K	5%	1/16W	(TR42/TR70/TR72/TR80/TR82/TR430/TR550)
R246	1-216-819-11	METAL CHIP	680	5%	1/16W	
R247	1-216-815-11	METAL CHIP	330	5%	1/16W	
R253	1-218-849-11	METAL CHIP	1.2K	0.50%	1/16W	
R255	1-216-821-11	METAL CHIP	1K	5%	1/16W	
R256	1-216-821-11	METAL CHIP	1K	5%	1/16W	
R259	1-218-859-11	METAL CHIP	3.3K	0.50%	1/16W	
R261	1-216-821-11	METAL CHIP	1K	5%	1/16W	
R262	1-216-825-11	METAL CHIP	2.2K	5%	1/16W	
R263	1-218-839-11	METAL GLAZE	470	0.50%	1/16W	
R264	1-216-828-11	METAL CHIP	3.9K	5%	1/16W	(TR400/TR750)
R265	1-216-818-11	METAL CHIP	560	5%	1/16W	
R266	1-218-837-11	METAL GLAZE	390	0.50%	1/16W	(TR400/TR750)

VS-104 VS-112

Ref. No.	Part No.	Description				Remark
R161	1-216-817-11	METAL CHIP	470	5%	1/16W	(TR400/TR750)
R162	1-216-818-11	METAL CHIP	560	5%	1/16W	(TR42/TR70/TR72/TR80/TR82/TR430/TR550)
R163	1-216-821-11	METAL CHIP	1K	5%	1/16W	(TR42/TR70/TR72/TR80/TR82/TR430/TR550)
R164	1-216-864-11	METAL CHIP	0	5%	1/16W	(TR42/TR70/TR72/TR80/TR82/TR430/TR550)
R165	1-216-821-11	METAL CHIP	1K	5%	1/16W	(TR42/TR70/TR72/TR80/TR82/TR430/TR550)
R166	1-216-816-11	METAL CHIP	390	5%	1/16W	(TR42/TR70/TR72/TR80/TR82/TR430/TR550)
R167	1-216-821-11	METAL CHIP	1K	5%	1/16W	(TR400/TR750)
R168	1-216-815-11	METAL CHIP	330	5%	1/16W	(TR400/TR750)
R169	1-216-818-11	METAL CHIP	560	5%	1/16W	(TR400/TR750)
R170	1-216-822-11	METAL CHIP	1.2K	5%	1/16W	(TR400/TR750)
R171	1-216-833-11	METAL CHIP	1.5K	5%	1/16W	(TR42/TR70/TR72/TR80/TR82/TR430/TR550)
R173	1-216-822-11	METAL CHIP	3.9K	5%	1/16W	(TR400/TR750)
R174	1-216-816-11	METAL CHIP	390	5%	1/16W	(TR400/TR750)
R175	1-216-821-11	METAL CHIP	1K	5%	1/16W	
R178	1-216-806-11	METAL CHIP	100	5%	1/16W	
R179	1-216-825-11	METAL CHIP	2.2K	5%	1/16W	
R180	1-216-809-11	METAL CHIP	150	5%	1/16W	
R181	1-216-821-11	METAL CHIP	1K	5%	1/16W	
R182	1-216-864-11	METAL CHIP	0	5%	1/16W	(TR400/TR750)
R185	1-216-847-11	METAL CHIP	150K	5%	1/16W	
R186	1-216-837-11	METAL CHIP	22K	5%	1/16W	
R187	1-216-837-11	METAL CHIP	22K	5%	1/16W	
R188	1-216-837-11	METAL CHIP	22K	5%	1/16W	
R189	1-216-837-11	METAL CHIP	22K	5%	1/16W	
R190	1-216-817-11	METAL CHIP	470	5%	1/16W	(TR400/TR750)
R191	1-216-815-11	METAL CHIP	330	5%	1/16W	(TR400/TR750)
R193	1-216-815-11	METAL CHIP	330	5%	1/16W	
R194	1-216-818-11	METAL CHIP	560	5%	1/16W	
R195	1-216-839-11	METAL CHIP	33K	5%	1/16W	
R196	1-216-838-11	METAL CHIP	18K	5%	1/16W	
R197	1-216-864-11	METAL CHIP	0	5%	1/16W	
R198	1-216-864-11	METAL CHIP	0	5%	1/16W	(TR70/TR80)
R199	1-216-864-11	METAL CHIP	0	5%	1/16W	(TR70/TR80)
R200	1-216-864-11	METAL CHIP	0	5%	1/16W	(TR400/TR750)

Ref. No.	Part No.	Description				Remark
R201	1-216-829-11	METAL CHIP	4.7K	5%	1/16W	
R202	1-216-832-11	METAL CHIP	8.2K	5%	1/16W	
R203	1-216-829-11	METAL CHIP	4.7K	5%	1/16W	
R205	1-216-864-11	METAL CHIP	0	5%	1/16W	
R206	1-216-817-11	METAL CHIP	470	5%	1/16W	(TR400/TR750)
R208	1-216-864-11	METAL CHIP	0	5%	1/16W	(TR42/TR70/TR72/TR80/TR82/TR430/TR550)
R207	1-216-804-11	METAL CHIP	39	5%	1/16W	
R208	1-216-821-11	METAL CHIP	1K	5%	1/16W	(TR400/TR750)
R209	1-216-814-11	METAL CHIP	270	5%	1/16W	
R210	1-216-821-11	METAL CHIP	1K	5%	1/16W	
R211	1-216-808-11	METAL CHIP	33	5%	1/16W	
R213	1-216-833-11	METAL CHIP	10K	5%	1/16W	
R214	1-216-822-11	METAL CHIP	3.9K	5%	1/16W	
R215	1-216-819-11	METAL CHIP	680	5%	1/16W	
R216	1-216-825-11	METAL CHIP	2.2K	5%	1/16W	
R218	1-216-821-11	METAL CHIP	1K	5%	1/16W	
R219	1-216-831-11	METAL CHIP	6.8K	5%	1/16W	
R220	1-216-829-11	METAL CHIP	4.7K	5%	1/16W	(TR42/TR72/TR82/TR430/TR550)
R221	1-216-829-11	METAL CHIP	4.7K	5%	1/16W	(TR42/TR72/TR82/TR430/TR550)
R222	1-216-829-11	METAL CHIP	4.7K	5%	1/16W	(TR42/TR72/TR82/TR430/TR550)
R223	1-216-833-11	METAL CHIP	10K	5%	1/16W	(TR42/TR72/TR82/TR430/TR550)
R224	1-216-829-11	METAL CHIP	4.7K	5%	1/16W	
R225	1-216-831-11	METAL CHIP	6.8K	5%	1/16W	
R230	1-216-836-11	METAL CHIP	5.6K	5%	1/16W	
R231	1-216-833-11	METAL CHIP	10K	5%	1/16W	
R232	1-216-830-11	METAL CHIP	5.6K	5%	1/16W	
R234	1-216-854-11	METAL CHIP	0	5%	1/16W	
R235	1-216-877-11	METAL CHIP	15K	0.50%	1/16W	
R241	1-216-833-11	METAL CHIP	10K	5%	1/16W	
R245	1-216-829-11	METAL CHIP	4.7K	5%	1/16W	(TR42/TR70/TR72/TR80/TR82/TR430/TR550)
R246	1-216-819-11	METAL CHIP	680	5%	1/16W	
R247	1-216-815-11	METAL CHIP	330	5%	1/16W	
R253	1-216-848-11	METAL CHIP	1.2K	0.50%	1/16W	
R255	1-216-821-11	METAL CHIP	1K	5%	1/16W	
R256	1-216-821-11	METAL CHIP	1K	5%	1/16W	
R259	1-216-829-11	METAL CHIP	3.3K	0.50%	1/16W	
R261	1-216-821-11	METAL CHIP	1K	5%	1/16W	
R262	1-216-825-11	METAL CHIP	2.2K	5%	1/16W	
R263	1-216-839-11	METAL GLAZE	470	0.50%	1/16W	
R264	1-216-822-11	METAL CHIP	3.9K	5%	1/16W	(TR400/TR750)
R265	1-216-818-11	METAL CHIP	560	5%	1/16W	
R266	1-216-897-11	METAL GLAZE	990	0.50%	1/16W	(TR400/TR750)

Ref. No.	Part No.	Description	Remark
R272	1-216-826-11	METAL CHIP 2.7K 5% 1/16W	
R273	1-216-830-11	METAL CHIP 5.6K 5% 1/16W	
R274	1-216-823-11	METAL CHIP 1.5K 5% 1/16W	
R275	1-216-295-00	METAL CHIP 0 5% 1/10W	
R276	1-216-296-00	METAL CHIP 0 5% 1/8W	
R277	1-216-295-00	METAL CHIP 0 5% 1/10W	(TR400/TR750)
R278	1-216-296-00	METAL CHIP 0 5% 1/8W	(TR400/TR750)
R279	1-216-819-11	METAL CHIP 680 5% 1/16W	
R280	1-216-841-11	METAL CHIP 47K 5% 1/16W	
R281	1-216-864-11	METAL CHIP 0 5% 1/16W	(TR70/TR80/TR400/TR750)
R282	1-216-827-11	METAL CHIP 3.3K 5% 1/16W	
R283	1-216-864-11	METAL CHIP 0 5% 1/16W	(TR42/TR70/TR72/TR80/TR82/TR430/TR550)
R285	1-216-857-11	METAL CHIP 1M 5% 1/16W	
R286	1-216-825-11	METAL CHIP 2.2K 5% 1/16W	(TR42/TR70/TR72/TR80/TR82/TR430/TR550)
R288	1-216-844-11	METAL CHIP 82K 5% 1/16W	
R289	1-216-821-11	METAL CHIP 1K 5% 1/16W	
R290	1-216-864-11	METAL CHIP 0 5% 1/16W	
R291	1-216-833-11	METAL CHIP 10K 5% 1/16W	(TR42/TR70/TR72/TR80/TR82/TR430/TR550)
R293	1-216-825-11	METAL CHIP 2.2K 5% 1/16W	(TR400/TR750)
R295	1-216-864-11	METAL CHIP 0 5% 1/16W	
R296	1-216-815-11	METAL CHIP 330 5% 1/16W	(TR42/TR70/TR72/TR80/TR82/TR430/TR550)
R297	1-216-825-11	METAL CHIP 2.2K 5% 1/16W	(TR42/TR70/TR72/TR80/TR82/TR430/TR550)
R300	1-216-817-11	METAL CHIP 470 5% 1/16W	(TR42/TR70/TR72/TR80/TR82/TR430/TR550)
R302	1-216-864-11	METAL CHIP 0 5% 1/16W	(TR42/TR70/TR72/TR80/TR82/TR430/TR550)
R303	1-216-810-11	METAL CHIP 120 5% 1/16W	(TR42/TR70/TR72/TR80/TR82/TR430/TR550)
R304	1-216-833-11	METAL CHIP 10K 5% 1/16W	(TR42/TR70/TR72/TR80/TR82/TR430/TR550)
R305	1-216-820-11	METAL CHIP 820 5% 1/16W	(TR42/TR70/TR72/TR80/TR82/TR430/TR550)
R307	1-216-813-11	METAL CHIP 220 5% 1/16W	(TR42/TR70/TR72/TR80/TR82/TR430/TR550)
R308	1-216-842-11	METAL CHIP 56K 5% 1/16W	
R309	1-216-839-11	METAL CHIP 33K 5% 1/16W	
R312	1-216-821-11	METAL CHIP 1K 5% 1/16W	
R313	1-216-817-11	METAL CHIP 470 5% 1/16W	
R314	1-216-864-11	METAL CHIP 0 5% 1/16W	(TR42/TR70/TR72/TR80/TR82/TR430/TR550)
R315	1-216-821-11	METAL CHIP 1K 5% 1/16W	
R316	1-216-815-11	METAL CHIP 330 5% 1/16W	(TR42/TR70/TR72/TR80/TR82/TR430/TR550)
R317	1-216-820-11	METAL CHIP 820 5% 1/16W	(TR42/TR70/TR72/TR80/TR82/TR430/TR550)
R318	1-216-820-11	METAL CHIP 820 5% 1/16W	(TR42/TR70/TR72/TR80/TR82/TR430/TR550)
R319	1-216-818-11	METAL CHIP 560 5% 1/16W	(TR42/TR70/TR72/TR80/TR82/TR430/TR550)
R321	1-216-813-11	METAL CHIP 220 5% 1/16W	(TR42/TR70/TR72/TR80/TR82/TR430/TR550)
R322	1-216-825-11	METAL CHIP 2.2K 5% 1/16W	
R323	1-216-825-11	METAL CHIP 2.2K 5% 1/16W	
R324	1-216-821-11	METAL CHIP 1K 5% 1/16W	
R325	1-216-821-11	METAL CHIP 1K 5% 1/16W	
R326	1-216-813-11	METAL CHIP 220 5% 1/16W	(TR42/TR70/TR72/TR80/TR82/TR430/TR550)
R328	1-216-820-11	METAL CHIP 820 5% 1/16W	(TR42/TR70/TR72/TR80/TR82/TR430/TR550)
R329	1-216-833-11	METAL CHIP 10K 5% 1/16W	(TR42/TR70/TR72/TR80/TR82/TR430/TR550)
R331	1-216-825-11	METAL CHIP 2.2K 5% 1/16W	(TR42/TR70/TR72/TR80/TR82/TR430/TR550)
R333	1-216-825-11	METAL CHIP 2.2K 5% 1/16W	
R334	1-216-815-11	METAL CHIP 330 5% 1/16W	(TR42/TR70/TR72/TR80/TR82/TR430/TR550)
R338	1-216-812-11	METAL CHIP 180 5% 1/16W	(TR42/TR70/TR72/TR80/TR82/TR430/TR550)
R339	1-216-827-11	METAL CHIP 3.3K 5% 1/16W	
R342	1-216-831-11	METAL CHIP 6.8K 5% 1/16W	(TR42/TR70/TR72/TR80/TR82/TR430/TR550)
R343	1-216-853-11	METAL CHIP 470K 5% 1/16W	(TR400/TR750)
R346	1-216-857-11	METAL CHIP 1M 5% 1/16W	(TR400/TR750)
R347	1-216-837-11	METAL CHIP 22K 5% 1/16W	
R348	1-216-839-11	METAL CHIP 33K 5% 1/16W	(TR42/TR70/TR72/TR80/TR82/TR430/TR550)
R349	1-216-864-11	METAL CHIP 0 5% 1/16W	(TR42/TR70/TR72/TR80/TR82/TR430/TR550)
R350	1-216-844-11	METAL CHIP 82K 5% 1/16W	(TR400/TR750)
R351	1-216-821-11	METAL CHIP 1K 5% 1/16W	(TR400/TR750)
R354	1-216-825-11	METAL CHIP 2.2K 5% 1/16W	(TR42/TR70/TR72/TR80/TR82/TR430/TR550)
R355	1-216-842-11	METAL CHIP 56K 5% 1/16W	(TR400/TR750)
R356	1-216-839-11	METAL CHIP 33K 5% 1/16W	(TR400/TR750)
R357	1-216-829-11	METAL CHIP 4.7K 5% 1/16W	(TR42/TR70/TR72/TR80/TR82/TR430/TR550)
R358	1-216-821-11	METAL CHIP 1K 5% 1/16W	(TR400/TR750)
R359	1-216-817-11	METAL CHIP 470 5% 1/16W	(TR400/TR750)
R360	1-216-826-11	METAL CHIP 2.7K 5% 1/16W	(TR400/TR750)
R361	1-216-825-11	METAL CHIP 2.2K 5% 1/16W	(TR400/TR750)

Ref. No.	Part No.	Description				Remark
R272	1-216-826-11	METAL CHIP	2.7K	5%	1/16W	
R273	1-216-830-11	METAL CHIP	5.6K	5%	1/16W	
R274	1-216-833-11	METAL CHIP	1.5K	5%	1/16W	
R275	1-216-835-00	METAL CHIP	0	5%	1/16W	
R276	1-216-295-00	METAL CHIP	0	5%	1/8W	
R277	1-216-295-00	METAL CHIP	0	5%	1/10W	(TR400/TR750)
R278	1-216-298-00	METAL CHIP	0	5%	1/8W	(TR450/TR750)
R279	1-216-819-11	METAL CHIP	680	5%	1/16W	
R280	1-216-841-11	METAL CHIP	47K	5%	1/16W	
R281	1-216-864-11	METAL CHIP	0	5%	1/16W	(TR70/TR80/TR400/TR750)
R282	1-216-827-11	METAL CHIP	3.3K	5%	1/16W	
R283	1-216-854-11	METAL CHIP	0	5%	1/16W	(TR42/TR70/TR72/TR80/TR82/TR430/TR550)
R285	1-216-857-11	METAL CHIP	1M	5%	1/16W	
R286	1-216-835-11	METAL CHIP	2.2K	5%	1/16W	(TR42/TR70/TR72/TR80/TR82/TR430/TR550)
R288	1-216-844-11	METAL CHIP	82K	5%	1/16W	
R289	1-216-821-11	METAL CHIP	1K	5%	1/16W	
R290	1-216-864-11	METAL CHIP	0	5%	1/16W	
R291	1-216-838-11	METAL CHIP	10K	5%	1/16W	(TR42/TR70/TR72/TR80/TR82/TR430/TR550)
R293	1-216-835-11	METAL CHIP	2.2K	5%	1/16W	(TR400/TR750)
R295	1-216-864-11	METAL CHIP	0	5%	1/16W	
R296	1-216-816-11	METAL CHIP	330	5%	1/16W	(TR42/TR70/TR72/TR80/TR82/TR430/TR550)
R297	1-216-825-11	METAL CHIP	2.0K	5%	1/16W	(TR42/TR70/TR72/TR80/TR82/TR430/TR550)
R300	1-216-817-11	METAL CHIP	470	5%	1/16W	(TR42/TR70/TR72/TR80/TR82/TR430/TR550)
R302	1-216-864-11	METAL CHIP	0	5%	1/16W	(TR42/TR70/TR72/TR80/TR82/TR430/TR550)
R303	1-216-810-11	METAL CHIP	150	5%	1/16W	(TR42/TR70/TR72/TR80/TR82/TR430/TR550)
R304	1-216-833-11	METAL CHIP	10K	5%	1/16W	(TR42/TR70/TR72/TR80/TR82/TR430/TR550)
R305	1-216-820-11	METAL CHIP	820	5%	1/16W	(TR42/TR70/TR72/TR80/TR82/TR430/TR550)
R307	1-216-813-11	METAL CHIP	220	5%	1/16W	(TR42/TR70/TR72/TR80/TR82/TR430/TR550)
R308	1-216-842-11	METAL CHIP	56K	5%	1/16W	
R309	1-216-839-11	METAL CHIP	33K	5%	1/16W	
R312	1-216-821-11	METAL CHIP	1K	5%	1/16W	
R313	1-216-817-11	METAL CHIP	470	5%	1/16W	
R314	1-216-864-11	METAL CHIP	0	5%	1/16W	(TR42/TR70/TR72/TR80/TR82/TR430/TR550)
R316	1-216-821-11	METAL CHIP	1K	5%	1/16W	
R316	1-216-815-11	METAL CHIP	330	5%	1/16W	(TR42/TR70/TR72/TR80/TR82/TR430/TR550)
R317	1-216-820-11	METAL CHIP	820	5%	1/16W	(TR42/TR70/TR72/TR80/TR82/TR430/TR550)
R318	1-216-820-11	METAL CHIP	820	5%	1/16W	(TR42/TR70/TR72/TR80/TR82/TR430/TR550)
R319	1-216-818-11	METAL CHIP	560	5%	1/16W	(TR42/TR70/TR72/TR80/TR82/TR430/TR550)
R321	1-216-813-11	METAL CHIP	220	5%	1/16W	(TR42/TR70/TR72/TR80/TR82/TR430/TR550)
R322	1-216-835-11	METAL CHIP	2.2K	5%	1/16W	
R323	1-216-835-11	METAL CHIP	2.2K	5%	1/16W	
R324	1-216-821-11	METAL CHIP	1K	5%	1/16W	
R325	1-216-821-11	METAL CHIP	1K	5%	1/16W	
R326	1-216-818-11	METAL CHIP	560	5%	1/16W	(TR42/TR70/TR72/TR80/TR82/TR430/TR550)
R328	1-216-820-11	METAL CHIP	820	5%	1/16W	(TR42/TR70/TR72/TR80/TR82/TR430/TR550)
R329	1-216-833-11	METAL CHIP	10K	5%	1/16W	(TR42/TR70/TR72/TR80/TR82/TR430/TR550)
R331	1-216-826-11	METAL CHIP	2.7K	5%	1/16W	(TR42/TR70/TR72/TR80/TR82/TR430/TR550)
R333	1-216-835-11	METAL CHIP	2.2K	5%	1/16W	
R334	1-216-815-11	METAL CHIP	330	5%	1/16W	(TR42/TR70/TR72/TR80/TR82/TR430/TR550)
R338	1-216-818-11	METAL CHIP	180	5%	1/16W	(TR42/TR70/TR72/TR80/TR82/TR430/TR550)
R339	1-216-827-11	METAL CHIP	3.3K	5%	1/16W	
R342	1-216-831-11	METAL CHIP	6.8K	5%	1/16W	(TR42/TR70/TR72/TR80/TR82/TR430/TR550)
R343	1-216-843-11	METAL CHIP	470K	5%	1/16W	(TR400/TR750)
R346	1-216-857-11	METAL CHIP	1M	5%	1/16W	(TR400/TR750)
R347	1-216-837-11	METAL CHIP	22K	5%	1/16W	
R348	1-216-839-11	METAL CHIP	33K	5%	1/16W	(TR42/TR70/TR72/TR80/TR82/TR430/TR550)
R349	1-216-864-11	METAL CHIP	0	5%	1/16W	(TR42/TR70/TR72/TR80/TR82/TR401/TR550)
R350	1-216-844-11	METAL CHIP	82K	5%	1/16W	(TR400/TR750)
R351	1-216-821-11	METAL CHIP	1K	5%	1/16W	(TR400/TR750)
R354	1-216-835-11	METAL CHIP	2.2K	5%	1/16W	(TR42/TR70/TR72/TR80/TR82/TR430/TR550)
R355	1-216-842-11	METAL CHIP	56K	5%	1/16W	(TR400/TR750)
R356	1-216-839-11	METAL CHIP	33K	5%	1/16W	(TR400/TR750)
R357	1-216-839-11	METAL CHIP	4.7K	5%	1/16W	(TR42/TR70/TR72/TR80/TR82/TR430/TR550)
R358	1-216-821-11	METAL CHIP	1K	5%	1/16W	(TR400/TR750)
R359	1-216-817-11	METAL CHIP	470	5%	1/16W	(TR405/TR750)
R360	1-216-826-11	METAL CHIP	2.7K	5%	1/16W	(TR400/TR750)
R361	1-216-825-11	METAL CHIP	2.0K	5%	1/16W	(TR400/TR750)

Ref. No.	Part No.	Description				Remark
R362	1-216-825-11	METAL CHIP	2.2K	5%	1/16W	(TR400/TR750)
R363	1-216-825-11	METAL CHIP	2.2K	5%	1/16W	(TR400/TR750)
R364	1-216-864-11	METAL CHIP	0	5%	1/16W	(TR42/TR70/TR72/TR80/TR82/TR430/TR550)
R366	1-216-864-11	METAL CHIP	0	5%	1/16W	(TR42/TR70/TR72/TR80/TR82/TR430/TR550)
R368	1-216-829-11	METAL CHIP	4.7K	5%	1/16W	
R373	1-216-833-11	METAL CHIP	10K	5%	1/16W	
R375	1-216-864-11	METAL CHIP	0	5%	1/16W	(TR400/TR750)
R377	1-216-864-11	METAL CHIP	0	5%	1/16W	(TR42/TR72/TR82/TR430/TR550)
R378	1-216-864-11	METAL CHIP	0	5%	1/16W	(TR42/TR72/TR82/TR430/TR550)
R380	1-216-837-11	METAL CHIP	22K	5%	1/16W	
R381	1-216-837-11	METAL CHIP	22K	5%	1/16W	
R383	1-216-842-11	METAL CHIP	56K	5%	1/16W	
R387	1-216-825-11	METAL CHIP	2.2K	5%	1/16W	
R391	1-216-864-11	METAL CHIP	0	5%	1/16W	
R398	1-216-821-11	METAL CHIP	1K	5%	1/16W	
R399	1-216-829-11	METAL CHIP	4.7K	5%	1/16W	
R500	1-216-841-11	METAL CHIP	47K	5%	1/16W	
R501	1-216-833-11	METAL CHIP	10K	5%	1/16W	
R502	1-216-295-00	METAL CHIP	0	5%	1/10W	
R503	1-216-841-11	METAL CHIP	47K	5%	1/16W	
R505	1-216-864-11	METAL CHIP	0	5%	1/16W	
R506	1-216-829-11	METAL CHIP	4.7K	5%	1/16W	(TR70/TR80)
R506	1-216-841-11	METAL CHIP	47K	5%	1/16W	(TR42/TR72/TR82/TR400/TR430/TR550/TR750)
R507	1-216-857-11	METAL CHIP	1M	5%	1/16W	
R508	1-216-821-11	METAL CHIP	1K	5%	1/16W	
R509	1-216-851-11	METAL CHIP	330K	5%	1/16W	
R510	1-216-841-11	METAL CHIP	47K	5%	1/16W	
R511	1-216-839-11	METAL CHIP	33K	5%	1/16W	
R512	1-216-837-11	METAL CHIP	22K	5%	1/16W	
R513	1-216-837-11	METAL CHIP	22K	5%	1/16W	
R514	1-216-845-11	METAL CHIP	100K	5%	1/16W	
R515	1-216-853-11	METAL CHIP	470K	5%	1/16W	
R517	1-216-821-11	METAL CHIP	1K	5%	1/16W	
R518	1-216-857-11	METAL CHIP	1M	5%	1/16W	
R519	1-216-817-11	METAL CHIP	470	5%	1/16W	
R520	1-216-845-11	METAL CHIP	100K	5%	1/16W	
R522	1-216-841-11	METAL CHIP	47K	5%	1/16W	
R523	1-216-831-11	METAL CHIP	6.8K	5%	1/16W	
R525	1-216-853-11	METAL CHIP	470K	5%	1/16W	
R526	1-216-841-11	METAL CHIP	47K	5%	1/16W	
R527	1-216-829-11	METAL CHIP	4.7K	5%	1/16W	
R528	1-216-829-11	METAL CHIP	4.7K	5%	1/16W	
R529	1-216-845-11	METAL CHIP	100K	5%	1/16W	
R530	1-216-019-00	METAL CHIP	56	5%	1/10W	
R531	1-216-829-11	METAL CHIP	4.7K	5%	1/16W	
R532	1-216-833-11	METAL CHIP	10K	5%	1/16W	
R533	1-217-671-11	METAL CHIP	1	5%	1/10W	
R534	1-217-671-11	METAL CHIP	1	5%	1/10W	
R535	1-217-671-11	METAL CHIP	1	5%	1/10W	
R536	1-217-671-11	METAL CHIP	1	5%	1/10W	
R537	1-216-829-11	METAL CHIP	4.7K	5%	1/16W	
R538	1-216-821-11	METAL CHIP	1K	5%	1/16W	
R539	1-216-841-11	METAL CHIP	47K	5%	1/16W	
R540	1-216-829-11	METAL CHIP	4.7K	5%	1/16W	
R541	1-216-835-11	METAL CHIP	15K	5%	1/16W	
R542	1-216-864-11	METAL CHIP	0	5%	1/16W	
R543	1-216-864-11	METAL CHIP	0	5%	1/16W	
R544	1-216-833-11	METAL CHIP	10K	5%	1/16W	
R546	1-216-833-11	METAL CHIP	10K	5%	1/16W	
R548	1-216-845-11	METAL CHIP	100K	5%	1/16W	
R549	1-216-821-11	METAL CHIP	1K	5%	1/16W	
R550	1-216-841-11	METAL CHIP	47K	5%	1/16W	
R551	1-216-864-11	METAL CHIP	0	5%	1/16W	
R552	1-216-833-11	METAL CHIP	10K	5%	1/16W	
R553	1-216-821-11	METAL CHIP	1K	5%	1/16W	
R554	1-216-841-11	METAL CHIP	47K	5%	1/16W	
R555	1-216-864-11	METAL CHIP	0	5%	1/16W	
R556	1-216-841-11	METAL CHIP	47K	5%	1/16W	
R558	1-216-841-11	METAL CHIP	47K	5%	1/16W	
R560	1-216-296-00	METAL CHIP	0	5%	1/8W	
R561	1-216-833-11	METAL CHIP	10K	5%	1/16W	
R562	1-216-851-11	METAL CHIP	330K	5%	1/16W	
R563	1-216-841-11	METAL CHIP	47K	5%	1/16W	
R567	1-216-821-11	METAL CHIP	1K	5%	1/16W	
R569	1-216-845-11	METAL CHIP	100K	5%	1/16W	(TR72/TR80/TR400/TR430/TR750)
R570	1-216-821-11	METAL CHIP	1K	5%	1/16W	
R572	1-216-841-11	METAL CHIP	47K	5%	1/16W	
R573	1-216-845-11	METAL CHIP	100K	5%	1/16W	
R575	1-216-864-11	METAL CHIP	0	5%	1/16W	
R577	1-216-845-11	METAL CHIP	100K	5%	1/16W	
R578	1-216-833-11	METAL CHIP	10K	5%	1/16W	
R579	1-216-864-11	METAL CHIP	0	5%	1/16W	
R580	1-216-845-11	METAL CHIP	100K	5%	1/16W	
R581	1-216-821-11	METAL CHIP	1K	5%	1/16W	
R582	1-216-821-11	METAL CHIP	1K	5%	1/16W	
R583	1-216-833-11	METAL CHIP	10K	5%	1/16W	(TR42/TR70/TR82/TR550)
R584	1-216-864-11	METAL CHIP	0	5%	1/16W	
R585	1-216-821-11	METAL CHIP	1K	5%	1/16W	
R586	1-216-849-11	METAL CHIP	220K	5%	1/16W	
R587	1-216-853-11	METAL CHIP	470K	5%	1/16W	
R588	1-216-827-11	METAL CHIP	3.3K	5%	1/16W	

Ref. No.	Part No.	Description				Remark
R362	1-216-825-11	METAL CHIP	2.2K	5%	1/16W	(TR400/TR750)
R363	1-216-825-11	METAL CHIP	2.2K	5%	1/16W	(TR400/TR750)
R364	1-216-864-11	METAL CHIP	0	5%	1/16W	(TR42/TR70/TR72/TR80/TR82/TR430/TR550)
R366	1-216-864-11	METAL CHIP	0	5%	1/16W	(TR42/TR70/TR72/TR80/TR82/TR430/TR550)
R368	1-216-829-11	METAL CHIP	4.7K	5%	1/16W	
R373	1-216-833-11	METAL CHIP	10K	5%	1/16W	
R375	1-216-864-11	METAL CHIP	0	5%	1/16W	(TR400/TR750)
R377	1-216-864-11	METAL CHIP	0	5%	1/16W	(TR42/TR72/TR82/TR430/TR550)
R378	1-216-864-11	METAL CHIP	0	5%	1/16W	(TR42/TR72/TR82/TR430/TR550)
R380	1-216-837-11	METAL CHIP	22K	5%	1/16W	
R381	1-216-837-11	METAL CHIP	22K	5%	1/16W	
R383	1-216-842-11	METAL CHIP	56K	5%	1/16W	
R387	1-216-825-11	METAL CHIP	2.2K	5%	1/16W	
R391	1-216-864-11	METAL CHIP	0	5%	1/16W	
R398	1-216-821-11	METAL CHIP	1K	5%	1/16W	
R399	1-216-829-11	METAL CHIP	4.7K	5%	1/16W	
R500	1-216-841-11	METAL CHIP	47K	5%	1/16W	
R501	1-216-833-11	METAL CHIP	10K	5%	1/16W	
R502	1-216-295-00	METAL CHIP	0	5%	1/10W	
R505	1-216-841-11	METAL CHIP	47K	5%	1/16W	
R506	1-216-864-11	METAL CHIP	0	5%	1/16W	
R508	1-216-829-11	METAL CHIP	4.7K	5%	1/16W	(TR70/TR80)
R508	1-216-841-11	METAL CHIP	47K	5%	1/16W	(TR42/TR72/TR82/TR400/TR430/TR550/TR750)
R507	1-216-857-11	METAL CHIP	1M	5%	1/16W	
R508	1-216-821-11	METAL CHIP	1K	5%	1/16W	
R509	1-216-851-11	METAL CHIP	330K	5%	1/16W	
R510	1-216-841-11	METAL CHIP	47K	5%	1/16W	
R511	1-216-839-11	METAL CHIP	33K	5%	1/16W	
R512	1-216-837-11	METAL CHIP	22K	5%	1/16W	
R513	1-216-837-11	METAL CHIP	22K	5%	1/16W	
R514	1-216-845-11	METAL CHIP	100K	5%	1/16W	
R515	1-216-853-11	METAL CHIP	470K	5%	1/16W	
R517	1-216-821-11	METAL CHIP	1K	5%	1/16W	
R518	1-216-857-11	METAL CHIP	1M	5%	1/16W	
R519	1-216-817-11	METAL CHIP	470	5%	1/16W	
R520	1-216-845-11	METAL CHIP	100K	5%	1/16W	
R522	1-216-841-11	METAL CHIP	47K	5%	1/16W	
R523	1-216-831-11	METAL CHIP	6.8K	5%	1/16W	
R525	1-216-853-11	METAL CHIP	470K	5%	1/16W	
R526	1-216-841-11	METAL CHIP	47K	5%	1/16W	
R527	1-216-829-11	METAL CHIP	4.7K	5%	1/16W	
R528	1-216-829-11	METAL CHIP	4.7K	5%	1/16W	
R529	1-216-845-11	METAL CHIP	100K	5%	1/16W	
R530	1-216-219-00	METAL CHIP	56	5%	1/10W	
R531	1-216-839-11	METAL CHIP	4.7K	5%	1/16W	
R532	1-216-833-11	METAL CHIP	10K	5%	1/16W	
R533	1-217-671-11	METAL CHIP	1	5%	1/10W	
R534	1-217-671-11	METAL CHIP	1	5%	1/10W	
R535	1-217-671-11	METAL CHIP	1	5%	1/10W	
R536	1-217-671-11	METAL CHIP	1	5%	1/10W	
R537	1-216-829-11	METAL CHIP	4.7K	5%	1/16W	
R538	1-216-821-11	METAL CHIP	1K	5%	1/16W	
R539	1-216-841-11	METAL CHIP	47K	5%	1/16W	
R540	1-216-829-11	METAL CHIP	4.7K	5%	1/16W	
R541	1-216-835-11	METAL CHIP	15K	5%	1/16W	
R542	1-216-864-11	METAL CHIP	0	5%	1/16W	
R543	1-216-864-11	METAL CHIP	0	5%	1/16W	
R544	1-216-833-11	METAL CHIP	10K	5%	1/16W	
R546	1-216-833-11	METAL CHIP	10K	5%	1/16W	
R548	1-216-845-11	METAL CHIP	100K	5%	1/16W	
R549	1-216-821-11	METAL CHIP	1K	5%	1/16W	
R550	1-216-841-11	METAL CHIP	47K	5%	1/16W	
R551	1-216-864-11	METAL CHIP	0	5%	1/16W	
R552	1-216-833-11	METAL CHIP	10K	5%	1/16W	
R553	1-216-821-11	METAL CHIP	1K	5%	1/16W	
R554	1-216-841-11	METAL CHIP	47K	5%	1/16W	
R555	1-216-864-11	METAL CHIP	0	5%	1/16W	
R556	1-216-841-11	METAL CHIP	47K	5%	1/16W	
R556	1-216-841-11	METAL CHIP	47K	5%	1/16W	
R560	1-216-295-00	METAL CHIP	0	5%	1/8W	
R561	1-216-839-11	METAL CHIP	33K	5%	1/16W	
R562	1-216-821-11	METAL CHIP	330K	5%	1/16W	
R563	1-216-841-11	METAL CHIP	47K	5%	1/16W	
R567	1-216-821-11	METAL CHIP	1K	5%	1/16W	
R569	1-216-845-11	METAL CHIP	100K	5%	1/16W	(TR72/TR80/TR400/TR430/TR750)
R570	1-216-821-11	METAL CHIP	1K	5%	1/16W	
R572	1-216-841-11	METAL CHIP	47K	5%	1/16W	
R573	1-216-845-11	METAL CHIP	100K	5%	1/16W	
R575	1-216-864-11	METAL CHIP	0	5%	1/16W	
R577	1-216-845-11	METAL CHIP	100K	5%	1/16W	
R578	1-216-833-11	METAL CHIP	10K	5%	1/16W	
R579	1-216-864-11	METAL CHIP	0	5%	1/16W	
R580	1-216-845-11	METAL CHIP	100K	5%	1/16W	
R581	1-216-821-11	METAL CHIP	1K	5%	1/16W	
R582	1-216-821-11	METAL CHIP	1K	5%	1/16W	
R583	1-216-833-11	METAL CHIP	10K	5%	1/16W	(TR42/TR70/TR82/TR550)
R584	1-216-864-11	METAL CHIP	0	5%	1/16W	
R585	1-216-821-11	METAL CHIP	1K	5%	1/16W	
R586	1-216-846-11	METAL CHIP	220K	5%	1/16W	
R587	1-216-853-11	METAL CHIP	470K	5%	1/16W	
R588	1-216-837-11	METAL CHIP	3.3K	5%	1/16W	

Ref. No.	Part No.	Description				Remark
R589	1-216-864-11	METAL CHIP	0	5%	1/16W	
R591	1-216-821-11	METAL CHIP	1K	5%	1/16W	
R592	1-216-841-11	METAL CHIP	47K	5%	1/16W	
R593	1-216-845-11	METAL CHIP	100K	5%	1/16W	
R594	1-216-821-11	METAL CHIP	1K	5%	1/16W	
R595	1-216-821-11	METAL CHIP	1K	5%	1/16W	
R596	1-216-833-11	METAL CHIP	10K	5%	1/16W	
R597	1-216-821-11	METAL CHIP	1K	5%	1/16W	
R943	1-216-864-11	METAL CHIP	0	5%	1/16W	(TR80)
R954	1-216-138-00	METAL CHIP	3.3	5%	1/8W	
R955	1-216-830-11	METAL CHIP	5.6K	5%	1/16W	
R956	1-216-836-11	METAL CHIP	18K	5%	1/16W	
R957	1-216-820-11	METAL CHIP	820	5%	1/16W	
R961	1-216-818-11	METAL CHIP	560	5%	1/16W	
R962	1-216-837-11	METAL CHIP	22K	5%	1/16W	(TR42/TR72/TR82/TR430/TR550)
R964	1-216-822-11	METAL CHIP	1.2K	5%	1/16W	(TR42/TR72/TR82/TR430/TR550)
R965	1-216-826-11	METAL CHIP	2.7K	5%	1/16W	(TR42/TR72/TR82/TR430/TR550)
R966	1-216-826-11	METAL CHIP	2.7K	5%	1/16W	(TR42/TR72/TR82/TR430/TR550)
R967	1-216-832-11	METAL CHIP	8.2K	5%	1/16W	(TR42/TR72/TR82/TR430/TR550)
R968	1-216-834-11	METAL CHIP	12K	5%	1/16W	(TR42/TR72/TR82/TR430/TR550)
R972	1-216-823-11	METAL CHIP	1.5K	5%	1/16W	(TR42/TR72/TR82/TR430/TR550)
R1251	1-216-829-11	METAL CHIP	4.7K	5%	1/16W	(TR400/TR750)
R1252	1-216-864-11	METAL CHIP	0	5%	1/16W	(TR70/TR80)
R1254	1-216-864-11	METAL CHIP	0	5%	1/16W	(TR70/TR80)
R1276	1-216-829-11	METAL CHIP	4.7K	5%	1/16W	(TR70/TR80)
R1277	1-216-825-11	METAL CHIP	2.2K	5%	1/16W	(TR70/TR80)
R1278	1-216-825-11	METAL CHIP	2.2K	5%	1/16W	(TR70/TR80)
R1259	1-216-821-11	METAL CHIP	1K	5%	1/16W	(TR400/TR750)
R1260	1-216-815-11	METAL CHIP	330	5%	1/16W	(TR400/TR750)
R1265	1-216-804-11	METAL CHIP	39	5%	1/16W	(TR400/TR750)
R1266	1-216-803-11	METAL CHIP	33	5%	1/16W	(TR400/TR750)
R1267	1-216-804-11	METAL CHIP	39	5%	1/16W	(TR400/TR750)
R1268	1-216-803-11	METAL CHIP	33	5%	1/16W	(TR400/TR750)
R1270	1-216-864-11	METAL CHIP	0	5%	1/16W	(TR70/TR80/TR400/TR750)
R1279	1-216-837-11	METAL CHIP	22K	5%	1/16W	(TR400/TR750)
R1280	1-216-837-11	METAL CHIP	22K	5%	1/16W	(TR400/TR750)
R1281	1-216-829-11	METAL CHIP	4.7K	5%	1/16W	(TR400/TR750)
R1282	1-216-825-11	METAL CHIP	2.2K	5%	1/16W	(TR400/TR750)
R1283	1-216-864-11	METAL CHIP	0	5%	1/16W	(TR70/TR80)
R1284	1-216-864-11	METAL CHIP	0	5%	1/16W	(TR400/TR750)
R1285	1-216-864-11	METAL CHIP	0	5%	1/16W	(TR70/TR80)
R1286	1-216-825-11	METAL CHIP	2.2K	5%	1/16W	(TR400/TR750)
R1287	1-216-825-11	METAL CHIP	2.2K	5%	1/16W	(TR400/TR750)
R1400	1-216-864-11	METAL CHIP	0	5%	1/16W	
R1401	1-216-864-11	METAL CHIP	0	5%	1/16W	
R1403	1-216-845-11	METAL CHIP	100K	5%	1/16W	
R1404	1-216-845-11	METAL CHIP	100K	5%	1/16W	
R1406	1-216-821-11	METAL CHIP	1K	5%	1/16W	

< NETWORK >

RB199	1-236-971-11	NETWORK, RES 0 (TR70/TR80)
RB500	1-236-436-11	NETWORK, RES 100K
RB501	1-236-432-11	NETWORK, RES 47K
RB502	1-236-971-11	NETWORK, RES 0
RB503	1-236-432-11	NETWORK, RES 47K
RB504	1-236-412-11	NETWORK, RES 1.0K
RB505	1-236-412-11	NETWORK, RES 1.0K
RB506	1-236-412-11	NETWORK, RES 1.0K
RB507	1-236-448-11	NETWORK, RES 1.0M
RB508	1-236-436-11	NETWORK, RES 100K
RB509	1-236-444-11	NETWORK, RES 470K
RB510	1-236-412-11	NETWORK, RES 1.0K
RB512	1-236-412-11	NETWORK, RES 1.0K
RB513	1-236-971-11	NETWORK, RES 0
RB514	1-236-907-11	RESISTOR, NETWORK (CHIP TYPE) 100K
RB515	1-236-904-11	RESISTOR, NETWORK (CHIP TYPE) 1K
RB516	1-236-904-11	RESISTOR, NETWORK (CHIP TYPE) 1K
RB518	1-236-971-11	NETWORK, RES 0
RB519	1-236-971-11	NETWORK, RES 0
RB520	1-236-904-11	RESISTOR, NETWORK (CHIP TYPE) 1K
RB521	1-236-412-11	NETWORK, RES 1.0K
RB522	1-236-448-11	NETWORK, RES 1.0M
RB523	1-236-432-11	NETWORK, RES 47K
RB524	1-236-908-11	RESISTOR, NETWORK (CHIP TYPE) 10K
RB525	1-236-424-11	NETWORK, RES 10K

Ref.No.	Part No.	Description				Remark
R589	1-216-864-11	METAL CHIP	0	5%	1/16W	
R591	1-216-821-11	METAL CHIP	1K	5%	1/16W	
R592	1-216-841-11	METAL CHIP	47K	5%	1/16W	
R593	1-216-845-11	METAL CHIP	100K	5%	1/16W	
R594	1-216-821-11	METAL CHIP	1K	5%	1/16W	
R595	1-216-821-11	METAL CHIP	1K	5%	1/16W	
R596	1-216-829-11	METAL CHIP	10K	5%	1/16W	
R597	1-216-821-11	METAL CHIP	1K	5%	1/16W	
R943	1-216-864-11	METAL CHIP	0	5%	1/16W	(TR80)
R954	1-216-138-00	METAL CHIP	3.3	5%	1/8W	
R955	1-216-830-11	METAL CHIP	5.6K	5%	1/16W	
R956	1-216-836-11	METAL CHIP	18K	5%	1/16W	
R957	1-216-820-11	METAL CHIP	820	5%	1/16W	
R961	1-216-818-11	METAL CHIP	560	5%	1/16W	
R962	1-216-827-11	METAL CHIP	82K	5%	1/16W	(TR42/TR72/TR82/TR430/TR550)
R964	1-216-822-11	METAL CHIP	1.2K	5%	1/16W	(TR42/TR72/TR82/TR430/TR550)
R965	1-216-823-11	METAL CHIP	2.7K	5%	1/16W	(TR42/TR72/TR82/TR430/TR550)
R966	1-216-825-11	METAL CHIP	2.7K	5%	1/16W	(TR42/TR72/TR82/TR430/TR550)
R967	1-216-833-11	METAL CHIP	8.2K	5%	1/16W	(TR42/TR72/TR82/TR430/TR550)
R968	1-216-834-11	METAL CHIP	12K	5%	1/16W	(TR42/TR72/TR82/TR430/TR550)
R972	1-216-823-11	METAL CHIP	1.5K	5%	1/16W	(TR42/TR72/TR82/TR430/TR550)
R1251	1-216-839-11	METAL CHIP	4.7K	5%	1/16W	(TR400/TR750)
R1252	1-216-864-11	METAL CHIP	0	5%	1/16W	(TR70/TR80)
R1254	1-216-864-11	METAL CHIP	0	5%	1/16W	(TR70/TR80)
R1276	1-216-829-11	METAL CHIP	4.7K	5%	1/16W	(TR70/TR80)
R1277	1-216-825-11	METAL CHIP	2.2K	5%	1/16W	(TR70/TR80)
R1278	1-216-825-11	METAL CHIP	2.2K	5%	1/16W	(TR70/TR80)
R1279	1-216-821-11	METAL CHIP	1K	5%	1/16W	(TR400/TR750)
R1280	1-216-815-11	METAL CHIP	330	5%	1/16W	(TR400/TR750)
R1285	1-216-804-11	METAL CHIP	39	5%	1/16W	(TR400/TR750)
R1286	1-216-808-11	METAL CHIP	68	5%	1/16W	(TR400/TR750)
R1287	1-216-804-11	METAL CHIP	39	5%	1/16W	(TR400/TR750)
R1288	1-216-808-11	METAL CHIP	33	5%	1/16W	(TR400/TR750)

Ref.No.	Part No.	Description				Remark
R1370	1-216-864-11	METAL CHIP	0	5%	1/16W	(TR70/TR80/TR400/TR750)
R1379	1-216-837-11	METAL CHIP	22K	5%	1/16W	(TR400/TR750)
R1380	1-216-837-11	METAL CHIP	22K	5%	1/16W	(TR400/TR750)
R1381	1-216-829-11	METAL CHIP	4.7K	5%	1/16W	(TR400/TR760)
R1382	1-216-825-11	METAL CHIP	2.2K	5%	1/16W	(TR400/TR750)
R1383	1-216-864-11	METAL CHIP	0	5%	1/16W	(TR70/TR80)
R1384	1-216-864-11	METAL CHIP	0	5%	1/16W	(TR400/TR750)
R1385	1-216-864-11	METAL CHIP	0	5%	1/16W	(TR70/TR80)
R1386	1-216-825-11	METAL CHIP	2.2K	5%	1/16W	(TR400/TR750)
R1387	1-216-825-11	METAL CHIP	2.2K	5%	1/16W	(TR400/TR750)
R1400	1-216-864-11	METAL CHIP	0	5%	1/16W	
R1401	1-216-864-11	METAL CHIP	0	5%	1/16W	
R1403	1-216-845-11	METAL CHIP	100K	5%	1/16W	
R1404	1-216-845-11	METAL CHIP	100K	5%	1/16W	
R1405	1-216-821-11	METAL CHIP	1K	5%	1/16W	

< NETWORK >

RN100	1-236-971-11	NETWORK, RES	0 (TR70/TR80)
RN500	1-236-436-11	NETWORK, RES	100K
RN501	1-236-433-11	NETWORK, RES	47K
RN502	1-236-971-11	NETWORK, RES	0
RN503	1-236-433-11	NETWORK, RES	47K
RN504	1-236-413-11	NETWORK, RES	1.0K
RN505	1-236-413-11	NETWORK, RES	1.0K
RN506	1-236-413-11	NETWORK, RES	1.0K
RN507	1-236-443-11	NETWORK, RES	1.0K
RN508	1-236-436-11	NETWORK, RES	100K
RN509	1-236-444-11	NETWORK, RES	470K
RN510	1-236-413-11	NETWORK, RES	1.0K
RN512	1-236-413-11	NETWORK, RES	1.0K
RN513	1-236-971-11	NETWORK, RES	0
RN514	1-236-807-11	RESISTOR, NETWORK (CHIP TYPE)	100K
RN515	1-236-904-11	RESISTOR, NETWORK (CHIP TYPE)	1K
RN516	1-236-904-11	RESISTOR, NETWORK (CHIP TYPE)	1K
RN518	1-236-971-11	NETWORK, RES	0
RN519	1-236-971-11	NETWORK, RES	0
RN520	1-236-904-11	RESISTOR, NETWORK (CHIP TYPE)	1K
RN521	1-236-413-11	NETWORK, RES	1.0K
RN522	1-236-443-11	NETWORK, RES	1.0K
RN523	1-236-433-11	NETWORK, RES	47K
RN524	1-236-808-11	RESISTOR, NETWORK (CHIP TYPE)	10K
RN525	1-236-424-11	NETWORK, RES	10K

Ref. No.	Part No.	Description	Remark
RB526	1-236-908-11	RESISTOR, NETWORK (CHIP TYPE) 10K	
RB527	1-236-424-11	NETWORK, RES 10K	
RB528	1-236-424-11	NETWORK, RES 10K	
RB529	1-236-424-11	NETWORK, RES 10K	
RB530	1-236-424-11	NETWORK, RES 10K	
RB531	1-236-424-11	NETWORK, RES 10K	
RB532	1-236-424-11	NETWORK, RES 10K	
RB533	1-236-412-11	NETWORK, RES 1.0K	
RB534	1-236-412-11	NETWORK, RES 1.0K	
RB535	1-236-908-11	RESISTOR, NETWORK (CHIP TYPE) 10K	
RB536	1-236-412-11	NETWORK, RES 1.0K	
RB537	1-236-412-11	NETWORK, RES 1.0K	
RB542	1-236-412-11	NETWORK, RES 1.0K	
RB543	1-236-412-11	NETWORK, RES 1.0K	
RB544	1-236-412-11	NETWORK, RES 1.0K	
RB547	1-236-444-11	NETWORK, RES 470K	(TR72/TR80/TR400/TR430/TR750)
RB548	1-236-416-11	NETWORK, RES 2.2K	
RB549	1-236-971-11	NETWORK, RES 0	
RB550	1-236-971-11	NETWORK, RES 0	
RB551	1-236-412-11	NETWORK, RES 1.0K	
RB552	1-236-412-11	NETWORK, RES 1.0K	
RB553	1-236-412-11	NETWORK, RES 1.0K	
RB554	1-236-971-11	NETWORK, RES 0	
		< VARIABLE RESISTOR >	
RV202	1-238-086-11	RES, ADJ, CERMET 470	
		< VIBRATOR >	
X201	1-579-365-21	VIBRATOR, CRYSTAL (3.58MHz)	
X501	1-579-550-11	VIBRATOR, CRYSTAL (32kHz)	
X502	1-760-314-11	VIBRATOR, CRYSTAL (11.895MHz)	
		< VIBRATOR >	
XTL501	1-579-369-21	VIBRATOR (10MHz)	

****

*	A-7072-002-A	ZB-2 BOARD, COMPLETE	
		**********	(Ref. No. 4,000 Series)
		< BUZZER >	
BU101	1-529-107-11	BUZZER, PIEZOELECTRIC	
		< CAPACITOR >	
C102	1-164-346-11	CERAMIC CHIP 1uF	16V
C103	1-164-346-11	CERAMIC CHIP 1uF	16V

Ref. No.	Part No.	Description	Remark
		< CONNECTOR >	
CN101	1-691-483-21	CONNECTOR, FFC/FPC 4P	
		< BATTERY HOLDER >	
LI101	1-550-104-11	HOLDER, BATTERY	

****

MISCELLANEOUS
****

110	1-810-535-11	DISPLAY PANEL, LIQUID CRYSTAL	(TR400/TR750)
111	1-467-676-11	SWITCH BLOCK, CONTROL (CK)	(TR42/TR82/TR550)
111	1-467-676-21	SWITCH BLOCK, CONTROL (CK)	(TR70/TR72/TR430)
111	1-467-676-41	SWITCH BLOCK, CONTROL (CK)	(TR400/TR750)
⚠162	1-452-673-11	CRT ASSY (M01KXX90WB)	(TR42/TR72/TR82/TR400/TR430/TR550/TR750)
163	1-651-894-11	FP-86 FLEXIBLE BOARD	(TR42/TR72/TR82/TR400/TR430/TR550/TR750)
167	1-651-903-11	FP-92 FLEXIBLE BOARD	(TR70/TR80)
168	1-651-893-11	FP-85 FLEXIBLE BOARD	(TR70/TR80)
171	1-517-325-11	LANP, FLUORESCENT (0.55 INCH)	(TR70/TR80)
181	8-753-015-00	LCX005AK-1	(TR70/TR80)
201	1-467-649-12	SWITCH BLOCK, CONTROL (FK)	(TR42/TR70/TR72/TR80/TR82/TR430/TR550)
201	1-467-649-31	SWITCH BLOCK, CONTROL (FK)	(TR400/TR750)
208	1-691-471-11	CONNECTOR, TRANSLATION 11P	
212	1-651-891-11	FP-52 FLEXIBLE BOARD	(TR42/TR70/TR72/TR80/TR82/TR430/TR550)
212	1-651-892-11	FP-53 FLEXIBLE BOARD	(TR400/TR750)
260	1-765-361-11	CABLE, FLAT (FFC-115)	(TR72/TR80/TR400/TR430/TR750)
260	1-765-362-11	CABLE, FLAT (FFC-134)	(TR42/TR70/TR82/TR550)
262	1-547-716-11	LENS, ZOOM (VCL-5412WA)	(TYPE II)
262	8-848-704-01	DEVICE, LENS LSV-140A	(TYPE I)
264	1-547-529-21	FILTER BLOCK, OPTICAL	(TR82/TR400/TR550/TR750)
264	1-547-558-21	FILTER BLOCK, OPTICAL	(TR42/TR70/TR80/TR430)
871	1-641-643-12	FP-444 FLEXIBLE BOARD	
872	1-691-254-13	CONNECTOR, TRANSLATION 10P	
IC691	A-7030-373-A	CCD BLOCK ASSY (AUTO) (059V SERVICE)	(CCD IMAGER) (TR82/TR400/TR550/TR750)
IC691	A-7030-368-A	CCD BLOCK ASSY (AUTO) (054 SERVICE)	(CCD IMAGER) (TR42/TR70/TR72/TR80/TR430)
J201	1-537-731-11	TERMINAL BOARD	(TR42/TR70/TR82/TR550)
J201	1-537-731-21	TERMINAL BOARD	(TR72/TR80/TR430)
J201	1-537-731-31	TERMINAL BOARD	(TR400/TR750)
M002	1-542-162-11	MICROHONE UNIT	

The components identified by mark ⚠ or dotted line with mark ⚠ are critical for safety. Replace only with part number specified.	Les composants identifiés par une marque ⚠ sont critiques pour la sécurité. Ne les remplacer que par une piéce portant le numéro spécifié.

VS-104 VS-112 ZB-2

Ref. No.	Part No.	Description	Remark
RB626	1-236-908-11	RESISTOR, NETWORK (CHIP TYPE) 10K	
RB627	1-236-424-11	NETWORK, RES 10K	
RB628	1-236-424-11	NETWORK, RES 10K	
RB629	1-236-424-11	NETWORK, RES 10K	
RB630	1-236-424-11	NETWORK, RES 10K	
RB631	1-236-424-11	NETWORK, RES 10K	
RB632	1-236-424-11	NETWORK, RES 10K	
RB633	1-236-412-11	NETWORK, RES 1.0K	
RB634	1-236-412-11	NETWORK, RES 1.0K	
RB635	1-236-908-11	RESISTOR, NETWORK (CHIP TYPE) 10K	
RB636	1-236-412-11	NETWORK, RES 1.0K	
RB637	1-236-412-11	NETWORK, RES 1.0K	
RB642	1-236-412-11	NETWORK, RES 1.0K	
RB643	1-236-412-11	NETWORK, RES 1.0K	
RB644	1-236-412-11	NETWORK, RES 1.0K	
RB647	1-236-444-11	NETWORK, RES 470K	(TR72/TR80/TR400/TR430/TR750)
RB648	1-236-416-11	NETWORK, RES 2.2K	
RB649	1-236-971-11	NETWORK, RES 0	
RB650	1-236-971-11	NETWORK, RES 0	
RB651	1-236-412-11	NETWORK, RES 1.0K	
RB652	1-236-412-11	NETWORK, RES 1.0K	
RB653	1-236-412-11	NETWORK, RES 1.0K	
RB654	1-236-971-11	NETWORK, RES 0	
		< VARIABLE RESISTOR >	
RV208	1-238-086-11	RES, ADJ, CERMET 470	
		< VIBRATOR >	
X201	1-579-385-21	VIBRATOR, CRYSTAL (3.58MHz)	
X501	1-579-550-11	VIBRATOR, CRYSTAL (32kHz)	
X502	1-760-314-11	VIBRATOR, CRYSTAL (11.899MHz)	
		< VIBRATOR >	
XIL501	1-579-389-21	VIBRATOR (10MHz)	

* * *

Ref. No.	Part No.	Description	Remark
*	A-7072-008-A	ZB-2 BOARD, COMPLETE	
		(Ref. No. 4,000 Series)	
		< BUZZER >	
BU101	1-529-107-11	BUZZER, PIEZOELECTRIC	
		< CAPACITOR >	
C102	1-164-346-11	CERAMIC CHIP 1uF	16V
C103	1-164-346-11	CERAMIC CHIP 1uF	16V
		< CONNECTOR >	
CN101	1-691-483-21	CONNECTOR, FFC/FPC 4P	
		< BATTERY HOLDER >	
LI101	1-550-104-11	HOLDER, BATTERY	

* * *

Ref. No.	Part No.	Description	Remark
		MISCELLANEOUS	
110	1-810-685-11	DISPLAY PANEL, LIQUID CRYSTAL (TR410/TR750)	
111	1-407-878-11	SWITCH BLOCK, CONTROL (CK) (TR42/TR82/TR550)	
111	1-407-878-21	SWITCH BLOCK, CONTROL (CK) (TR70/TR72/TR430)	
111	1-407-878-41	SWITCH BLOCK, CONTROL (CK)(TR400/TR750)	
⚠162	1-452-678-11	CRT ASSY (M01KXX90WB) (TR42/TR72/TR82/TR400/TR430/TR550/TR750)	
163	1-651-684-11	FP-86 FLEXIBLE BOARD (TR42/TR72/TR82/TR400/TR430/TR550/TR750)	
167	1-651-903-11	FP-92 FLEXIBLE BOARD (TR70/TR80)	
168	1-651-893-11	FP-85 FLEXIBLE BOARD (TR70/TR80)	
171	1-517-825-11	LAMP, FLUORESCENT (0.55 INCH)(TR70/TR80)	
181	8-753-015-00	LCX006AK-1 (TR70/TR80)	
201	1-407-849-12	SWITCH BLOCK, CONTROL (FK) (TR42/TR70/TR72/TR80/TR82/TR430/TR550)	
201	1-407-849-81	SWITCH BLOCK, CONTROL (FK)(TR400/TR750)	
208	1-691-471-11	CONNECTOR, TRANSLATION 11P	
212	1-651-881-11	FP-52 FLEXIBLE BOARD (TR42/TR70/TR72/TR80/TR82/TR430/TR550)	
212	1-651-882-11	FP-53 FLEXIBLE BOARD (TR400/TR750)	
260	1-765-861-11	CABLE, FLAT (FFC-115) (TR72/TR80/TR400/TR430/TR750)	
260	1-765-863-11	CABLE, FLAT (FFC-134) (TR42/TR70/TR82/TR550)	
262	1-547-716-11	LENS, ZOOM (VCL-0412WA)(TYPE II)	
263	8-848-704-01	DEVICE, LENS LSV-140A (TYPE I)	
264	1-547-529-21	FILTER BLOCK, OPTICAL (TR82/TR400/TR550/TR750)	
264	1-547-559-21	FILTER BLOCK,OPTICAL (TR42/TR70/TR80/TR430)	
871	1-841-843-13	FP-444 FLEXIBLE BOARD	
872	1-691-254-13	CONNECTOR, TRANSLATION 10P	
IC901	A-7030-373-A	CCD BLOCK ASSY (AUTO)(059V SERVICE) (CCD IMAGER)(TR82/TR400/TR550/TR750)	
IC901	A-7030-368-A	CCD BLOCK ASSY (AUTO)(054 SERVICE) (CCD IMAGER)(TR42/TR70/TR72/TR80/TR430)	
J801	1-637-731-11	TERMINAL BOARD (TR42/TR70/TR82/TR550)	
J801	1-637-731-21	TERMINAL BOARD (TR72/TR80/TR430)	
J801	1-637-731-81	TERMINAL BOARD (TR400/TR750)	
M802	1-542-162-11	MICROPHONE UNIT	

The components identified by mark ⚠ or dotted line with mark ⚠ are critical for safety. Replace only with part number specified.	Les composants identifiés par une marque ⚠ sont critiques pour la sécurité. Ne les remplacer que par une pièce portant le numéro spécifié.

6-6. INTERFACE

6-6-1. System Control – Video/Audio Block Interface (VS BOARD)

NAME	I/O	No.	VTR MODE				CAMERA MODE	
			STOP	FF	REW	PB	STAND BY	REC
SP/$\overline{\text{LP}}$	O	IC505 ⑪	H	H	H	*1	H	H
VA PB MODE	O	IC505 ㉟	L	L	L	H	L	L
AUDIO MUTE	O	IC505 ㊻	L	L	L	L	L	L
VIDEO MUTE	O	IC505 ㊼	H	H	H	*6	L	L
CAM/$\overline{\text{LINE}}$	O	IC505 ㉖	L	L	L	L	H	H
JOG VD	O	IC505 ③	L	L	L	L	L	L
RP PB MODE	O	IC505 ①	H	H	H	H	H	L
$\overline{\text{FE ON}}$	O	IC505 ②	H	H	H	H	H	L
RF SWP	O	IC505 ㊼	L	*2	*2	*2	*2	*2
JOG	O	IC505 ④	L	L	L	L	L	L
$\overline{\text{CS VIDEO}}$	O	IC505 ㉞	V period "L" pulse					
CS DA	O	IC505 ㊲	V period 'H" pulse					
DATA TO SLVE	O	IC503 ⑯	V period pulse train					
$\overline{\text{MODECON SCK}}$	I	IC503 ⑰	V period pulse train					
SP/$\overline{\text{LP}}$ DET	I	IC505 ㊶	L	*3	*3	L	H	H
CLOG DET	I	IC505 ㊷	L	*4	*4	*4	*4	H
VTR SYNC	I	IC505 ㊹	L	*5	*5	*5	*5	*5
COMP REC	O	IC505 ㉕	L	L	L	L	L	L

*1. Outputs discrimination result of the playback tape. "H" : SP mode, "L": LP mode.
*2. 30 Hz duty 50% pulse (synchronized with drum rotation)
*3. "H": SP recording area on tape. "L": LP recording area.
*4. "H": no recording area.
*5. Composite sync signal.
*6. "H" when tape no signal.

6-6-2. System Control – Servo Block Interface

NAME	I/O	No.	VTR MODE				CAMERA MODE	
			STOP	FF	REW	PB	STAND BY	REC
T.REEL FG	I	IC505 ⑥⓪	–	*1	*1	*1	–	*1
S.REEL FG	I	IC505 ⑤⑨	–	*1	*1	*1	–	*1
ATF ERROR	I	IC505 ⑤⑧	–	*2	*2	*2	*2	*2
DRUM PG	I	IC505 ⑥⑥	–	*3	*3	*3	*3	*3
DRUM FG	I	IC505 ⑥⑦	–	*4	*4	*4	*4	*4
CAP FG/CFG HMS	I	IC505 ⑥⑧, ⑦⑤	–	*5	*5	*5	*5	*5
CAP ON	O	IC505 ⑨⑨	L	H	H	H	L	H
REF PILOT	O	IC505 ⑧③	*7	*6	*6	*6	*6	*6
RP PB MODE	O	IC505 ①	H	H	H	H	H	L
DRUM RVS *9	O	IC505 ③③	H	H	H	H	H	H
CAP FWD/$\overline{\text{RVS}}$	O	IC505 ⑩⓪	L	H	L	H	L	H
DRUM PWM	O	IC505 ⑦④	L	*8	*8	*8	*8	*8
CAP PWM	O	IC505 ⑦③	L	*8	*8	*8	L	*8
$\overline{\text{LM LIM CONT}}$ *10	O	IC505 ③①	L	L	L	L	L	L
DRUM ON *11	O	IC505 ③②	L	H	H	H	H	H
DRUM ACC	O	IC505 ⑧⑨	L	L	L	L	L	L
DRUM BRK	O	IC505 ⑨⓪	L	L	L	L	L	L

*1. Inputting waveform.
*2. ATF error voltage input.
*3. One PG pulse input.
*4. FG pulses input.
*5. FG pulses input.
*6. Four frequencies.
*7. f_1 (102.54 kHz) or f_3 (165.21 kHz) output
*8. PWM signal.
*9. Normally "H". Temporary "L" when load (drum reverse rotation).
*10. Temporary "H" when cassette loading (finger catch protection).
*11. "H": approx. 1.3 Vdc.

6-8. INTERFACE

6-8-1. System Control – Video/Audio Block Interface (VS BOARD)

NAME	I/O	No.	VTR MODE				CAMERA MODE	
			STOP	FF	REW	PB	STANDBY	REC
SP/LP	O	IC808 (7)	H	H	H	*1	H	H
VA PB MODE	O	IC808 (8)	L	L	L	H	L	L
AUDIO MUTE	O	IC808 (9)	L	L	L	L	L	L
VIDEO MUTE	O	IC808 (10)	H	H	H	*3	L	L
CAMCORE	O	IC807 (9)	L	L	L	L	H	H
JOG VD	O	IC808 (3)	L	L	L	L	L	L
RF PB MODE	O	IC808 (1)	H	H	H	H	H	L
FE DR	O	IC808 (2)	H	H	H	H	H	L
RF SWP	O	IC808 (6)	L	*2	*2	*2	*2	*2
JOG	O	IC808 (4)	L	L	L	L	L	L
CF VIDEO	O	IC808 (5)	V period "L" pulse					
CF DA	O	IC808 (12)	V period "H" pulse					
DATA TO SLVR	O	IC808 (13)	V period pulse train					
SLVR/COUNTER	I	IC808 (17)	V period pulse train					
SP/LP DET	I	IC808 (11)	L	*2	*2	L	H	H
CLOG DET	I	IC808 (15)	L	*4	*4	*4	*4	H
VTR SYNC	I	IC808 (14)	L	*5	*2	*5	*5	*2
COMP REC	O	IC808 (16)	L	L	L	L	L	L

*1. Output discrimination result of the playback tape. "H" : SP mode, "L": LP mode.
*2. 30 Hz duty 50% pulse (synchronized with drum rotation)
*3. "H": SP recording area on tape, "L": LP recording area.
*4. "H": no recording area.
*5. Composite sync signal.
*6. "H" when tape no signal.

6-8-2. System Control – Servo Block Interface

NAME	I/O	No.	VTR MODE				CAMERA MODE	
			STOP	FF	REW	PB	STANDBY	REC
T.REEL FG	I	IC805 (3)	–	*1	*1	*1	–	*1
S.REEL FG	I	IC805 (4)	–	*1	*1	*1	–	*1
ATF ERROR	I	IC805 (5)	–	*2	*2	*2	*2	*2
DRUM FG	I	IC805 (6)	–	*3	*3	*3	*3	*3
DRUM PG	I	IC805 (7)	–	*4	*4	*4	*4	*4
CAP FG/CFG HMI	I	IC805 (8), (9)	–	*5	*5	*5	*5	*5
CAP ON	O	IC805 (1)	L	H	H	H	L	H
REF PILOT	O	IC805 (2)	*7	*6	*6	*6	*6	*6
RF PB MODE	O	IC805 (3)	H	H	H	H	H	L
DRUM FWD *8	O	IC805 (4)	H	H	H	H	H	H
CAP FWD/RVS	O	IC805 (5)	L	H	L	H	L	H
DRUM PWM	O	IC805 (6)	L	*8	*8	*8	*8	*8
CAP PWM	O	IC805 (7)	L	*8	*8	*8	L	*8
LM LIM CONT *10	O	IC805 (8)	L	L	L	L	L	L
DRUM ON *11	O	IC805 (9)	L	H	H	H	H	H
DRUM AGC	O	IC805 (10)	L	L	L	L	L	L
DRUM SRK	O	IC805 (11)	L	L	L	L	L	L

*1. Inputting waveforms.
*2. ATF error voltage input.
*3. One FG pulse input.
*4. PG pulse input.
*5. FG pulse input.
*6. Rear frequencies.
*7. fi (XGL84 kHz) or fh (161.31 kHz) output
*8. PWM signal.
*9. Normally "H".
Temporary "L" when load (drum reverse rotation).
*10. Temporary "H" when cassette loading (finger catch protection).
*11. "H": approx. 1.5 Vdc.

1-2. CAMERA SYSTEM ADJUSTMENT

1. Power Supply Voltage Check (DD board)

Subject	Option
Measuring instrument	Digital voltmeter
D5V check	
Measurement point	Pins ㉙ of CN901
Specified value	4.9 ± 0.1 Vdc
D3.6V check	
Measurement point	Pins ㉑ and ㉒ of CN901
Specified value	3.6 ± 0.1 Vdc
CAM 5V check	
Measurement point	Pins ㉕ and ㉖ of CN901
Specified value	4.85 ± 0.1 Vdc
CAM 15V check	
Measurement point	Pin ㉗ of CN901
Specified value	15 ± 0.3 Vdc
CAM –9V check	
Measurement point	Pin ㉛ of CN901
Specified value	$-8.5^{+0.25}_{-0.4}$ Vdc

Checking method:

1) Check that each power supply voltage satisfies the specified value.

2. Page F Data Initialization

Note: It is necessary to perform all adjustments of the camera section from the beginning again if the data of page F has been initialized.

Initializing method:

1) Page: 6, address: 00, data: 01
2) Check that the data of page: 6, address: 11 is 00.
3) Set data: 2D to page: 6, address: 01, and press the PAUSE button of the adjusting remote commander.
4) Check that the data of page: 6, address: 11 is 01.
5) Set data: 00 to page: 6, address: 01. and press the PAUSE button of the adjusting remote commander.
6) After performing "Page F data modification", perform all the adjustments of the camera section (page F).

1-2. CAMERA SYSTEM ADJUSTMENT

1. Power Supply Voltage Check (DD board)

Subject	Option
Measuring instrument	Digital voltmeter
D5V check	
Measurement point	Pins ⑩ of CN901
Specified value	4.9 ± 0.1 Vdc
D3.6V check	
Measurement point	Pins ㉑ and ㉒ of CN901
Specified value	3.6 ± 0.1 Vdc
CAM 5V check	
Measurement point	Pins ⑤ and ⑥ of CN901
Specified value	4.85 ± 0.1 Vdc
CAM 15V check	
Measurement point	Pin ㉒ of CN901
Specified value	15 ± 0.3 Vdc
CAM –9V check	
Measurement point	Pin ㉑ of CN901
Specified value	$-8.5^{+0.25}_{-0.4}$ Vdc

Checking method:

1) Check that each power supply voltage satisfies the specified value.

2. Page F Data Initialization

Note: It is necessary to perform all adjustments of the camera section from the beginning again if the data of page F has been initialized.

Initializing method:

1) Page: 6, address: 00, data: 01
2) Check that the data of page: 6, address: 11 is 00.
3) Set data: 2D to page: 6, address: 01, and press the PAUSE button of the adjusting remote commander.
4) Check that the data of page: 6, address: 11 is 01.
5) Set data: 00 to page: 6, address: 01, and press the PAUSE button of the adjusting remote commander.
6) After performing "Page F data modification", perform all the adjustments of the camera section (page F).

3. Page F Data Modification 1

The data (initial data) that is automatically written on page F after the initialization of the page F data will differ according to some camera micro processor versions. Change the data by manual input, and arrange it.

Note 1: When changing the data, to write the data to the non-volatile memory, press the PAUSE button of the adjusting remote commander every time the new data is set.

Note 2: When changing address: 00, set the data of page: 6, address: 00 to 80.

CCD-TR42/TR70/TR72/TR80/TR430

Address	Data
00	5C [5E]
01	0A
03	00
25	A5
27	3A
28	A2
2A	0C
2B	58
〈2D〉	〈04〉
2E	17
2F	22
30	08
32	50
34	00
35	30
3B	20
3D	03
50	05
54	66
57	66
58	59
5E	1E
60	3A
77	E0
[90]	[11]
9C	91
A4	02
BD	70
BE	35
BF	54

[ ] : CCD-TR70 only

〈 〉 : CCD-TR430 only

CCD-TR82/TR550

Address	Data
00	5A
20	79
21	79
27	3A
28	A2
2B	50
[2D]	[04]
2F	27
30	08
32	47
3B	20
3D	02
50	32
77	E0
9C	91
A4	02
B1	25
B3	25
B4	A2
BD	6E
BE	32
BF	54

[ ] : CCD-TR550 only

CCD-TR400/TR750

Address	Data
00	56
20	79
21	79
27	3A
28	A2
2B	50
[2D]	[04]
2F	29
30	08
32	48
3B	20
3D	02
50	32
77	E0
9C	91
A4	02
B1	25
B3	25
B4	A2
BD	6E
BE	32
BF	54

[ ] : CCD-TR750 only

[Distinguishing the Camera Micro Computer (IC602) Versions]

Each version can be distinguished by looking at the part name of the camera micro processor or the data of page: 6, address: 10.

Version	Part Name	Page: 6 Address: 10
Ver.1.0	SC424608	10

[Distinguishing the Steady Shot Control Micro Computer (IC777) Versions] (CCD-TR82/TR400/TR550/TR750)

Each version can be distinguished by looking at the part name of the steady shot control micro processor or the data of page: 6, address: 30.

Version	Part Name	Page: 6 Address: 30
Ver.1.0	CXP87132-010R	01

3. Page F Data Modification 1

The data (initial data) that is automatically written on page F after the initialization of the page F data will differ according to some camera micro processor versions. Change the data by manual input, and arrange it.

Note 1: When changing the data, to write the data to the non-volatile memory, press the PAUSE button of the adjusting remote commander every time the new data is set.

Note 2: When changing address: 00, set the data of page: 6, address: 00 to 80.

CCD-TR42/TR70/TR72/TR80/TR430

Address	Data
00	5C [5E]
01	0A
03	00
25	A5
27	3A
28	A2
2A	0C
2B	58
〈2D〉	〈04〉
2E	17
2F	22
30	08
32	50
34	00
35	30
3B	20
3D	03
50	05
54	66
57	66
58	59
5E	1E
60	3A
77	B0
[90]	[11]
9C	91
A4	02
BD	70
BE	35
BF	54

[ ] : CCD-TR70 only

〈 〉 : CCD-TR430 only

CCD-TR82/TR550

Address	Data
00	5A
20	79
21	79
27	3A
28	A2
2B	50
[2D]	[04]
2F	27
30	08
32	47
3B	20
3D	02
50	32
77	B0
9C	91
A4	02
B1	25
B3	25
B4	A2
BD	6E
BE	32
BF	54

[ ] : CCD-TR550 only

CCD-TR400/TR750

Address	Data
00	56
20	79
21	79
27	3A
28	A2
2B	50
[2D]	[04]
2F	29
30	08
32	48
3B	20
3D	02
50	32
77	B0
9C	91
A4	02
B1	25
B3	25
B4	A2
BD	6E
BE	32
BF	54

[ ] : CCD-TR750 only

[Distinguishing the Camera Micro Computer (IC602) Versions]

Each version can be distinguished by looking at the part name of the camera micro processor or the data of page: 6, address: 10.

Version	Part Name	Page: 6 Address: 10
Ver.1.0	SC424608	10

[Distinguishing the Steady Shot Control Micro Computer (IC777) Versions] (CCD-TR82/TR400/TR550/TR750)

Each version can be distinguished by looking at the part name of the steady shot control micro processor or the data of page: 6, address: 30.

Version	Part Name	Page: 6 Address: 30
Ver.1.0	CXP87132-010R	01

4. Page F Data Modification 2 (CCD-TR82/TR550)

Change the data of page: F, address: 2B according to the type of IC used for the camera core (IC609).

Changing Method:

1) Page: 6, address: 00, data: 01
2) Set data: 16 to page: 6, address: 02.
3) Select page: A.
4) Read the data displayed on the adjusting remote commander (4 digits) and take the second number as X.
5) When X is 2, set 53 to page: F, address: 2B. When X is 6, set 50.
6) Press the PAUSE button of the adjusting remote commander.

5. Page E Data Write (CCD-TR42/TR70/TR72/TR80/TR430)

Adjustment Page	E
Adjustment Address	00 to 10

Writing method:

1) Page: 6, address: 00, data: 80
2) Select page E, and input the data shown in Table 7-1-5. to each address.
   (After setting the data, be sure to press the PAUSE button of the adjusting remote commander before changing the address.)
3) Set data: 00 to page: 6, address: 00.

Address	Data
00	00
01	0F
02	30
03	65
04	2B
05	00
06	00
07	00
08	C3
09	0C
0A	00
0B	7E
0C	65
0D	2E
0E	62
0F	EC
10	00

Table. 7-1-5.

6. 28 MHz Original Oscillation Adjustment (VC board)

Adjust the 28 MHz oscillation of the synchronization clock.
If the oscillation is not 28 MHz, the period will be inaccurate or the image will not be in color.

Subject	Not required
Measurement Point	TP709 (CL)
Measuring Instrument	Frequency counter
Adjusting Element	CT701
Specified Value	14318181 ± 71 Hz

Adjusting method:

1) Use CT701 to adjust the oscillation frequency to 14318181 ± 71 Hz.

7. V SUB Adjustment

Set the CCD imager V SUB voltage to the voltage specified for the imager.

Subject	Not required
Adjustment Page	F
Adjustment Address	04

Adjusting Method:

1) Read the V SUB voltage code of the CCD imager.
   Obtain the corresponding V SUB data from the following table.
2) Page: 6, address: 00, data: 01
3) Set the V SUB data to page: F, address: 04.
4) Press the PAUSE button of the adjusting remote commander.

V SUB			V SUB		
Voltage Code	Data	Voltagee (Vdc) *1	Voltage Code	Data	Voltagee (Vdc) *1
e	6F	9.0	g	AD	14.0
f	75	9.5	r	B3	14.5
g	7B	10.0	s	B9	15.0
h	82	10.5	t	C0	15.5
j	88	11.0	u	C6	16.0
k	8E	11.5	v	CC	16.5
l	94	12.0	w	D2	17.0
m	9A	12.5	x	D8	17.5
n	A1	13.0	y	DF	18.0
p	A7	13.5	z	E5	18.5

*1: The V SUB voltages (TP703) given are reference values.

4. Page F Data Modification 2 (CCD-TR62/TR650)

Change the data of page: F, address: 2B according to the type of IC used for the camera core (IC609).

Changing Method:

1) Page: 6, address: 00, data: 01
2) Set data: 16 to page: 6, address: 02.
3) Select page: A.
4) Read the data displayed on the adjusting remote commander (4 digits) and take the second number as X.
5) When X is 2, set 53 to page: F, address: 2B. When X is 6, set 50.
6) Press the PAUSE button of the adjusting remote commander.

5. Page E Data Write (CCD-TR42/TR70/TR72/TR80/TR430)

Adjustment Page	E
Adjustment Address	00 to 10

Writing method:

1) Page: 6, address: 00, data: 80
2) Select page E, and input the data shown in Table 7-1-5. to each address.
   (After setting the data, be sure to press the PAUSE button of the adjusting remote commander before changing the address.)
3) Set data: 00 to page: 6, address: 00.

Address	Data
00	00
01	0F
02	30
03	65
04	2B
05	00
06	00
07	00
08	C3
09	0C
0A	00
0B	7E
0C	65
0D	2E
0E	62
0F	EC
10	00

Table. 7-1-5.

6. 28 MHz Original Oscillation Adjustment (VC board)

Adjust the 28 MHz oscillation of the synchronization clock.
If the oscillation is not 28 MHz, the period will be inaccurate or the image will not be in color.

Subject	Not required
Measurement Point	TP709 (CL)
Measuring Instrument	Frequency counter
Adjusting Element	CT701
Specified Value	14318181 ± 71 Hz

Adjusting method:

1) Use CT701 to adjust the oscillation frequency to 14318181 ± 71 Hz.

7. V SUB Adjustment

Set the CCD imager V SUB voltage to the voltage specified for the imager.

Subject	Not required
Adjustment Page	F
Adjustment Address	04

Adjusting Method:

1) Read the V SUB voltage code of the CCD imager.
   Obtain the corresponding V SUB data from the following table.
2) Page: 6, address: 00, data: 01
3) Set the V SUB data to page: F, address: 04.
4) Press the PAUSE button of the adjusting remote commander.

V SUB			V SUB		
Voltage Code	Data	Voltages (Vdc) *1	Voltage Code	Data	Voltages (Vdc) *1
e	6F	9.0	g	AD	14.0
f	75	9.5	r	B3	14.5
g	7B	10.0	s	B9	15.0
h	82	10.5	t	C0	15.5
j	88	11.0	u	C6	16.0
k	8E	11.5	v	CC	16.5
l	94	12.0	w	D2	17.0
m	9A	12.5	x	D8	17.5
n	A1	13.0	y	DF	18.0
p	A7	13.5	z	E5	18.5

*1: The V SUB voltages (TP703) given are reference values.

8. VRG Adjustment

Set the CCD imager V RG voltage to the voltage specified for the imager.

Subject	Not required
Adjustment Page	F
Adjustment Address	05 (V PGH)

Adjusting Method:

1) Read the VRG voltage code of the CCD imager.
   Obtain the corresponding VRG data from the following table.
2) Page: 6, address: 00, data: 01
3) Set the VRG data to page: F, address: 05.
4) Press the PAUSE button of the adjusting remote commander.

VRG		
Voltage Code	**Data**	**Voltage (Vdc) *2**
1	33	1.0
2	4E	1.5
3	69	2.0
4	84	2.5
5	9F	3.0
6	BA	3.5
7	D5	4.0

*2: The VRG voltages (TP707) given are reference values.

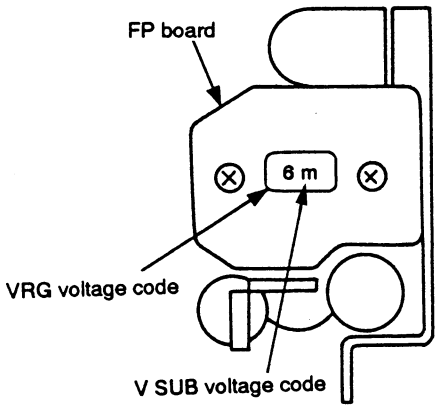

(Example) When "6m" is displayed:
The V SUB voltage code is "m" and therefore the V SUB data will be "9A".
The VRG voltage code is "6" and therefore the VRG data will be "BA".

Fig. 7-1-7.

9. Flange Back Adjustment

The flange back adjustment for the inner focus lens is performed automatically.

Subject	Chart for flange back adjustment (2000 ± 5 mm from the front side of the lens, Luminance: 300 ± 50 lux)
Measurement Point	Check the operations on the TV monitor
Measuring Instrument	
Adjustment Page	F
Adjustment Address	16, 17, 18, 19, 1A, 1B

Adjusting method:

1) Check that the flange back adjustment chart center and the exposure display center coincide at both zoom lens TELE end and WIDE end.
2) Page: 6, address: 00, data: 01
3) Check that the data of page: 6, address: 21 is 00.
4) Check that the page: F, address: 16 to 1B data is at the initial value. (Refer to Table 7-1-4. "Page F address list")
5) Set data: 13 to page: 6, address: 01 and press the PAUSE button of the adjusting remote commander.
6) Set data: 15 to page: 6, address: 01, and press the PAUSE button of the adjusting remote commander.
   (The adjustment data is automatically input to page: F, addresses: 16 to 1B.)
7) Check that the data of page: 6, address: 21 is 01.
   (Display indicating flange back adjustment completion)

Processing after completing adjustments

1) Turn off the main power supply (6.3V).

8. VRG Adjustment

Set the CCD imager V RG voltage to the voltage specified for the imager.

Subject	Not required
Adjustment Page	F
Adjustment Address	05 (V PGH)

Adjusting Method:

1) Read the VRG voltage code of the CCD imager.
   Obtain the corresponding VRG data from the following table.
2) Page: 6, address: 00, data: 01
3) Set the VRG data to page: F, address: 05.
4) Press the PAUSE button of the adjusting remote commander.

VRG		
Voltage Code	Data	Voltage (Vdc) *2
1	33	1.0
2	4E	1.5
3	69	2.0
4	84	2.5
5	9F	3.0
6	BA	3.5
7	D5	4.0

*2: The VRG voltages (TP707) given are reference values.

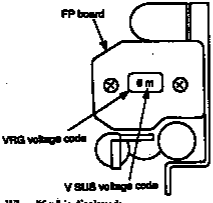

(Example) When "6m" is displayed:
The V SUB voltage code is "m" and therefore the V SUB data will be "9A".
The VRG voltage code is "6" and therefore the VRG data will be "BA".

Fig. 7-1-7.

9. Flange Back Adjustment

The flange back adjustment for the inner focus lens is performed automatically.

Subject	Chart for flange back adjustment (2000 ± 5 mm from the front side of the lens, Luminance: 300 ± 50 lux)
Measurement Point	Check the operations on the TV monitor
Measuring Instrument	
Adjustment Page	F
Adjustment Address	16, 17, 18, 19, 1A, 1B

Adjusting method:

1) Check that the flange back adjustment chart center and the exposure display center coincide at both zoom lens TELE end and WIDE end.
2) Page: 6, address: 00, data: 01
3) Check that the data of page: 6, address: 21 is 00.
4) Check that the page: F, address: 16 to 1B data is at the initial value. (Refer to Table 7-1-4. "Page F address list")
5) Set data: 13 to page: 6, address: 01 and press the PAUSE button of the adjusting remote commander.
6) Set data: 15 to page: 6, address: 01, and press the PAUSE button of the adjusting remote commander.
   (The adjustment data is automatically input to page: F, addresses: 16 to 1B.)
7) Check that the data of page: 6, address: 21 is 01.
   (Display indicating flange back adjustment completion)

Processing after completing adjustments

1) Turn off the main power supply (6.3V).

10. Flange Back Check

Subject	Siemens star (2m from the front of the lens)
Measurement Point	DDS display of EVF or TV monitor
Measuring Instrument	
Specified Value	Focused at the TELE end and WIDE end.

Checking method:

1) Place the Siemens star 2m from the front of the lens.
2) To open the IRIS, decrease the luminous intensity to the Siemens star up to a point before noise appears on the image.
3) Shoot the siemens star with the zoom TELE end.
4) Turn ON the auto focus.
5) When the lens is focused, turn OFF the auto focus. (Note 2)
6) Shoot the siemens star with the zoom WIDE end.
7) Check that the lens is focused.

Note 1: Input the following data for CCD-TR82/TR400/TR550/TR750.
1) Set data: 02 to page: 6, address: 32.
2) Set data: 01 to page: 6, address: 33.

Note 2: When the auto focus is ON, the lens can be checked if it is focused or not by observing the data on page A of the adjusting remote commander.
1) Set data: 0C to page: 6, address: 02.
2) Page A shows the state of the focus.

A : 00 : XX → (Odd: Focused / Even: Unfocused)

Processing after compleating adjustments

1) Set data: 00 to page: 6, address: 02.

For CCD-TR82/TR400/TR550/TR750

2) Set data: 00 to page: 6, address: 32.
3) Set data: 00 to page: 6, address: 33.

11. HALL Adjustment

To eliminate the differences in the outputs of the hall element attached to the iris for detecting the position of the lens iris, adjust the hall AMP gain and hall offset.

Subject	Not required
Measurement Point	DDS display of EVF or TV monitor
Measuring Instrument	
Adjustment Page	F
Adjustment Address	06, 07
Specified Value	32 to 36 during IRIS OPEN B4 to B8 during IRIS CLOSE

Adjusting method:

1) Page: 6, address: 00, data: 01
2) Page: 1, address: 00, data: 01
3) Set data: 21 to page: D, address: 03, and press the PAUSE button of the adjusting remote commander.
4) Set data: 03 to page: 6, address: 02.
5) Set data: 03 to page: 6, address: 01, and press the PAUSE button of the adjusting remote commander.
6) Set data: 80 to page: F, address: 07, and press the PAUSE button of the adjusting remote commander.
7) Set data: 40 to page: F, address: 06, and press the PAUSE button of the adjusting remote commander.
8) Read the DDS display data (the bottom two digits of the display data at the bottom right of the EVF or the monitor TV display), and set to W_2.
9) Set data: 30 to page: F, address: 06, and press the PAUSE button of the adjusting remote commander.
10) Read the DDS display data, and set to W_1.
11) Set data: 01 to page: 6, address: 01, and press the PAUSE button of the adjusting remote commander.
12) Read the DDS display data, and set to K_1.
13) Set data: 40 to page: F, address: 06, and press the PAUSE button.
14) Read the DDS display data, and set to K_2.
15) Convert W_1, W_2, K_1, K_2 to decimal notation, and obtain W_1', W_2', K_1', K_2'. (Refer to Table 7-1-5. "Hexadecimal notation-decimal notation conversion table".)
16) Calculate X_1' using the following equations (decimal notation calculation).

$A' = W_2' + K_1' - W_1' - K_2'$ ·····Equation 1

$B' = W_1' - K_1'$ ·····Equation 2

$X_1' = \dfrac{2080 + (48 \times A') - (16 \times B')}{A'}$ ·····Equation 3

10. Flange Back Check

Subject	Siemens star (2m from the front of the lens)
Measurement Point	DDS display of EVF or TV monitor
Measuring Instrument	
Specified Value	Focused at the TELE end and WIDE end.

Checking method:

1) Place the Siemens star 2m from the front of the lens.
2) To open the IRIS, decrease the luminous intensity to the Siemens star up to a point before noise appears on the image.
3) Shoot the siemens star with the zoom TELE end.
4) Turn ON the auto focus.
5) When the lens is focused, turn OFF the auto focus. (Note 2)
6) Shoot the siemens star with the zoom WIDE end.
7) Check that the lens is focused.

Note 1: Input the following data for CCD-TR82/TR400/TR550/TR750.
1) Set data: 02 to page: 6, address: 32.
2) Set data: 01 to page: 6, address: 33.

Note 2: When the auto focus is ON, the lens can be checked if it is focused or not by observing the data on page A of the adjusting remote commander.
1) Set data: 0C to page: 6, address: 02.
2) Page A shows the state of the focus.

A : 00 : XX
- Odd: Focused
- Even: Unfocused

Processing after completing adjustments

1) Set data: 00 to page: 6, address: 02.

For CCD-TR82/TR400/TR550/TR750

2) Set data: 00 to page: 6, address: 32.
3) Set data: 00 to page: 6, address: 33.

11. HALL Adjustment

To eliminate the differences in the outputs of the hall element attached to the iris for detecting the position of the lens iris, adjust the hall AMP gain and hall offset.

Subject	Not required
Measurement Point	DDS display of EVF or TV monitor
Measuring Instrument	
Adjustment Page	F
Adjustment Address	06, 07
Specified Value	32 to 36 during IRIS OPEN B4 to B8 during IRIS CLOSE

Adjusting method:

1) Page: 6, address: 00, data: 01
2) Page: 1, address: 00, data: 01
3) Set data: 21 to page: D, address: 03, and press the PAUSE button of the adjusting remote commander.
4) Set data: 03 to page: 6, address: 02.
5) Set data: 03 to page: 6, address: 01, and press the PAUSE button of the adjusting remote commander.
6) Set data: 80 to page: F, address: 07, and press the PAUSE button of the adjusting remote commander.
7) Set data: 40 to page: F, address: 06, and press the PAUSE button of the adjusting remote commander.
8) Read the DDS display data (the bottom two digits of the display data at the bottom right of the EVF or the monitor TV display), and set to W2.
9) Set data: 30 to page: F, address: 06, and press the PAUSE button of the adjusting remote commander.
10) Read the DDS display data, and set to W1.
11) Set data: 01 to page: 6, address: 01, and press the PAUSE button of the adjusting remote commander.
12) Read the DDS display data, and set to K1.
13) Set data: 40 to page: F, address: 06, and press the PAUSE button.
14) Read the DDS display data, and set to K2.
15) Convert W_1, W_2, K_1, K_2 to decimal notation, and obtain W_1', W_2', K_1', K_2'. (Refer to Table 7-1-5. "Hexadecimal notation-decimal notation conversion table".)
16) Calculate X_1' using the following equations (decimal notation calculation).

$A' = W_2' + K_1' - W_1' - K_2'$ ..... Equation 1

$B' = W_1' - K_1'$ ..... Equation 2

$X_1' = \frac{2080 + (48 \times A') - (16 \times B')}{A'}$ ..... Equation 3

17) Convert X_1' to hexadecimal notation, and obtain X_1. (Round off to one decimal place)
18) Set data: X_1 to page: F, address: 06, and press the PAUSE button of the adjusting remote commander.
19) Change the data of page: F, address: 07, and adjust the DDS display data to "34".
20) Press the PAUSE button of the adjusting remote commander.
21) Set data: 03 to page: 6, address: 01, and press the PAUSE button of the adjusting remote commander.
22) Read the DDS display data, and set to W_0. If W_0 lies within the "B4" to "B8" range, perform "Processing after completing adjustments". If it lies outside the range, perform the following adjustments.
23) Convert W_0 to hexadecimal notation, and obtain W_0'.
24) Calculate X_2' using the following equations (decimal notation calculation).

$$C' = W_0' - B' - 52 \quad \text{Equation 4}$$

$$X_2' = \frac{(130 - B') \times (X_1' - 48) + 48 \times C'}{C'} \quad \text{Equation 5}$$

(X_1' and B' are values obtained from equations 2 and3)

25) Convert X_2' to hexadecimal notation and obtain X_2. (Round off to one decimal place)
26) Set data X_2 to page: F, address: 06, and press the PAUSE button of the adjusting remote commander.
27) Change the data of page: F, address: 07, and adjust the DDS display data to "B6".
28) Press the PAUSE button of the adjusting remote commander.
29) Set data: 01 to page: 6, address: 01, and press the PAUSE button of the adjusting remote commander.
30) Check that the DDS display data lies within the "32" to "36" range.

Processing after Completing Adjustments

1) Set data: 00 to page: D, address: 03, and press the PAUSE button of the adjusting remote commander.
2) Set data: 00 to page: 6, address: 01, and press the PAUSE button of the adjusting remote commander.
3) Page D protect mode setting.
   Page: 1, address: 00, data: 00

12. SYNC Level Check (VC board)

Subject	Not required
Measurement Point	TP607
Measuring Instrument	Oscilloscope
Specified Value	A=140 ± 10 mV

Adjusting method:

1) Page: 6, address: 00, data: 01
2) Set data: 03 to page: 6, address: 01, and press the PAUSE button of the adjusting remote commander.
3) Check that the SYNC level (A) satisfies the specified value.

Processing after completing adjustments

1) Set data: 00 to page: 6, address: 01, and press the PAUSE button of the adjusting remote commander.

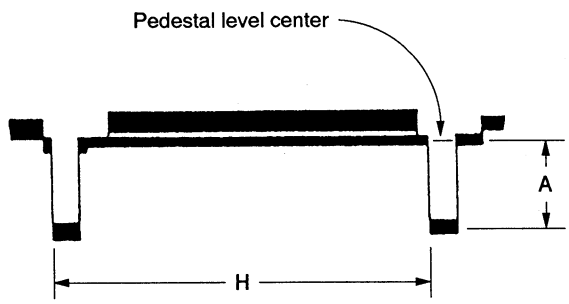

Fig. 7-1-8.

13. BURST Level Check (VC board)

Subject	Not required
Measurement Point	TP609
Measuring Instrument	Oscilloscope
Specified Value	A=140 ± 15 mVp-p

Adjusting method:

1) Page: 6, address: 00, data: 01
2) Set data: 03 to page: 6, address: 01, and press the PAUSE button of the adjusting remote commander.
3) Check that the Burst level (A) satisfies the specified value.

Processing after completing adjustments

1) Set data: 00 to page: 6, address: 01, and press the PAUSE button of the adjusting remote commander.

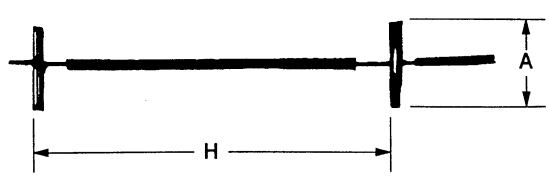

Fig. 7-1-9.

17) Convert X_1' to hexadecimal notation, and obtain X_1.
(Round off to one decimal place)
18) Set data: X_1 to page: F, address: 06, and press the PAUSE button of the adjusting remote commander.
19) Change the data of page: F, address: 07, and adjust the DDS display data to "34".
20) Press the PAUSE button of the adjusting remote commander.
21) Set data: 03 to page: 6, address: 01, and press the PAUSE button of the adjusting remote commander.
22) Read the DDS display data, and set to W_0. If W_0 lies within the "B4" to "B8" range, perform "Processing after completing adjustments". If it lies outside the range, perform the following adjustments.
23) Convert W_0 to hexadecimal notation, and obtain W_0'.
24) Calculate X_2' using the following equations (decimal notation calculation).

$$C' = W_0' - B' - 52 \quad \text{Equation 4}$$

$$X_2' = \frac{(130 - B') \times (X_1' - 48) + 48 \times C'}{C'} \quad \text{Equation 5}$$

(X_1' and B' are values obtained from equations 2 and3)
25) Convert X_2' to hexadecimal notation and obtain X_2.
(Round off to one decimal place)
26) Set data X_2 to page: F, address: 06, and press the PAUSE button of the adjusting remote commander.
27) Change the data of page: F, address: 07, and adjust the DDS display data to "B6".
28) Press the PAUSE button of the adjusting remote commander.
29) Set data: 01 to page: 6, address: 01, and press the PAUSE button of the adjusting remote commander.
30) Check that the DDS display data lies within the "32" to "36" range.

Processing after Completing Adjustments
1) Set data: 00 to page: D, address: 03, and press the PAUSE button of the adjusting remote commander.
2) Set data: 00 to page: 6, address: 01, and press the PAUSE button of the adjusting remote commander.
3) Page D protect mode setting.
Page: 1, address: 00, data: 00

12. SYNC Level Check (VC board)

Subject	Not required
Measurement Point	TP607
Measuring Instrument	Oscilloscope
Specified Value	A=140 ± 10 mV

Adjusting method:
1) Page: 6, address: 00, data: 01
2) Set data: 03 to page: 6, address: 01, and press the PAUSE button of the adjusting remote commander.
3) Check that the SYNC level (A) satisfies the specified value.

Processing after completing adjustments
1) Set data: 00 to page: 6, address: 01, and press the PAUSE button of the adjusting remote commander.

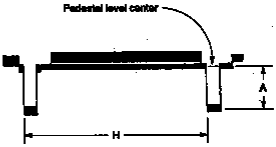

Fig. 7-1-8.

13. BURST Level Check (VC board)

Subject	Not required
Measurement Point	TP609
Measuring Instrument	Oscilloscope
Specified Value	A=140 ± 15 mVp-p

Adjusting method:
1) Page: 6, address: 00, data: 01
2) Set data: 03 to page: 6, address: 01, and press the PAUSE button of the adjusting remote commander.
3) Check that the Burst level (A) satisfies the specified value.

Processing after completing adjustments
1) Set data: 00 to page: 6, address: 01, and press the PAUSE button of the adjusting remote commander.

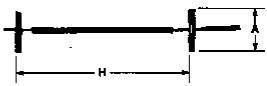

Fig. 7-1-9.

14. Picture Frame Setting

Subject	Color bar chart standard picture frame
Measurement Point	Video output terminal
Measuring Instrument	Oscilloscope and TV monitor.
Specified Value	A=B, C=D, t=0 ± 0.1 msec

Setting method:

1) Turn the auto focus off.
2) Adjust the focus.
3) Adjust the zoom and the camera direction, and set to the specified position.
4) Mark the position of the picture frame on the monitor display, and adjust the picture frame to this position in following adjustments using "color bar chart standard picture frame".

Check on the oscilloscope

1. horizontal period

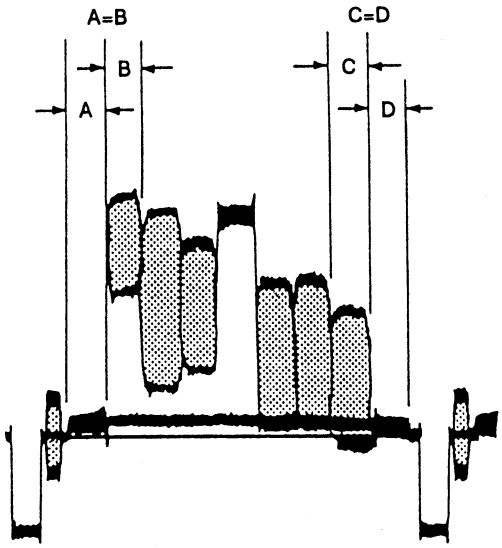

2. Vertical period

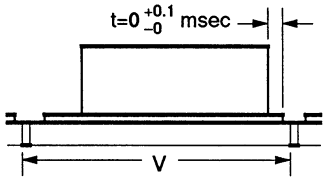

Fig. 7-1-10.

Check on the TV monitor

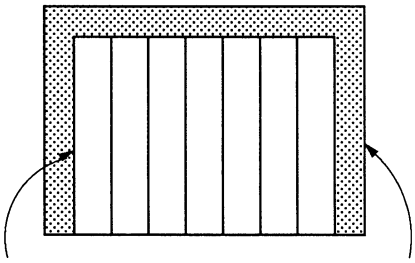

Color bar chart picture frame TV monitor picture frame

Fig. 7-1-11.

14. Picture Frame Setting

Subject	Color bar chart standard picture frame
Measurement Point	Video output terminal
Measuring Instrument	Oscilloscope and TV monitor.
Specified Value	A=B, C=D, t=0 ± 0.1 msec

Setting method:

1) Turn the auto focus off.
2) Adjust the focus.
3) Adjust the zoom and the camera direction, and set to the specified position.
4) Mark the position of the picture frame on the monitor display, and adjust the picture frame to this position in following adjustments using "color. bar chart standard picture frame".

Check on the oscilloscope

1. horizontal period

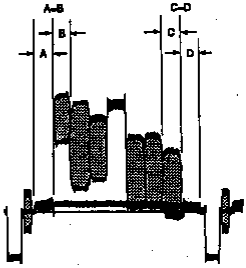

2. Vertical period

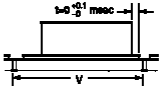

Fig. 7-1-10.

Check on the TV monitor

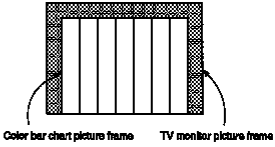

Fig. 7-1-11.

15. Color Reproduction Adjustment

Adjust the color separation matrix coefficient so that the proper color reproduction is produced.

Subject	Color bar chart standard picture frame
Measurement Point	Video output terminal
Measuring Instrument	Vectorscope
Adjustment Page	F
Adjustment Address	08 (RED MATRIX), 09 (BLUE MATRIX), 0A (B-Y HUE), 0B (R-Y HUE)
Specified Value	All color luminance points should settle within each color reproduction frame.

Adjusting method:

1) Page: 6, address: 00, data: 01
2) Set data: 00 to page: 6, address: 03.
3) Set data: F1 to page: F, address: 10, and press the PAUSE button of the adjusting remote commander.
4) Adjust the GAIN and PHASE of the vectorscope, and adjust the burst luminance point to the burst position of the color reproduction frame.
5) Change the data of addresses 08, 09, 0A and 0B of page: F, and settle each color luminance point in each color reproduction frame.

   Note 1: Be sure to press the PAUSE button of the adjusting remote commander before changing the addresses.
   If not, the new data will not be written to the memory.
6) Press the PAUSE button of the adjusting remote commander.

Processing after completing adjustments

1) Set data: E0 to page: F, address: 10 and press the PAUSE button of the adjusting remote commander.
2) Set data: 10 to page: 6, address: 03.

For CCD-TR42/TR70/TR72/TR80

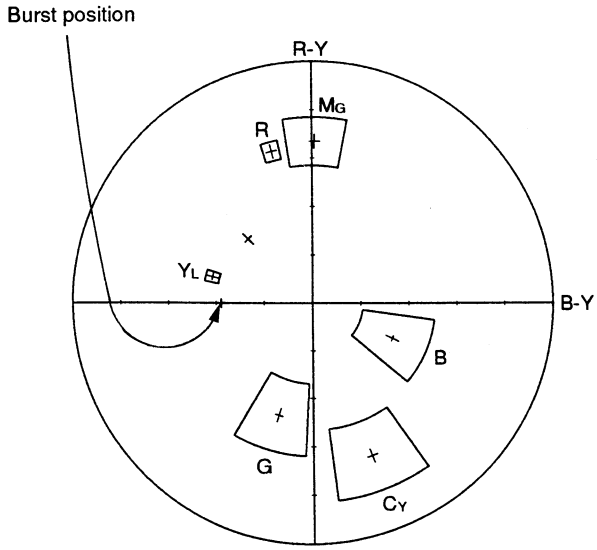

Fig. 7-1-12.

For CCD-TR82/TR550

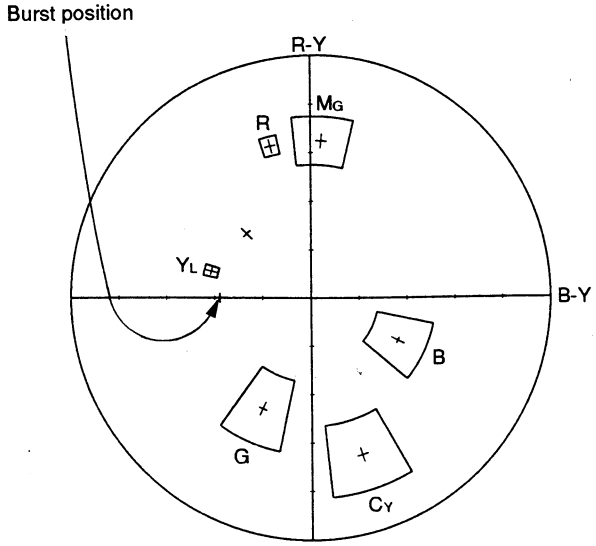

Fig. 7-1-13.

For CCD-TR400/TR750

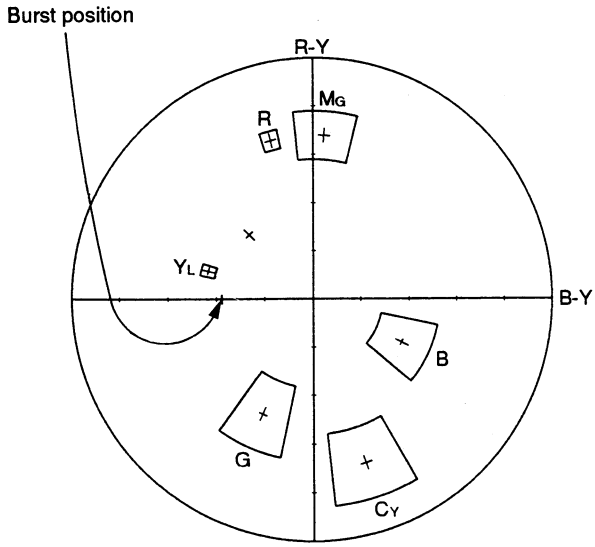

Fig. 7-1-14.

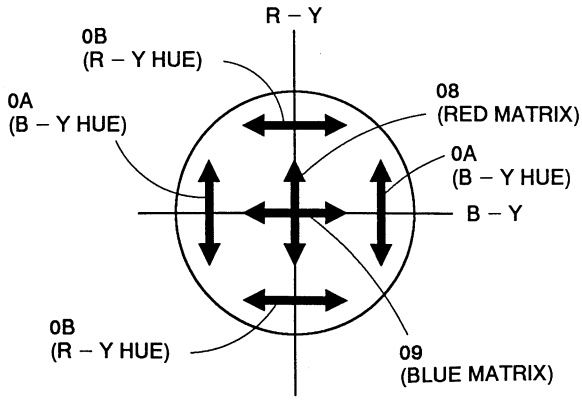

Fig. 7-1-15. Direction of the Movements of the Adjustment Address and Luminance Point

18. Color Reproduction Adjustment

Adjust the color separation matrix coefficient so that the proper color reproduction is produced.

Subject	Color bar chart standard picture frame
Measurement Point	Video output terminal
Measuring Instrument	Vectoscope
Adjustment Page	F
Adjustment Address	08 (RED MATRIX), 09 (BLUE MATRIX), 0A (B-Y HUE), 0B (R-Y HUE)
Specified Value	All color luminance points should settle within each color reproduction frame.

Adjusting method:

1) Page: 6, address: 00, data: 01
2) Set data: 00 to page: 6, address: 03.
3) Set data: F1 to page: F, address: 10, and press the PAUSE button of the adjusting remote commander.
4) Adjust the GAIN and PHASE of the vectoscope, and adjust the burst luminance point to the burst position of the color reproduction frame.
5) Change the data of addresses 08, 09, 0A and 0B of page: F, and settle each color luminance point in each color reproduction frame.
   Note 1: Be sure to press the PAUSE button of the adjusting remote commander before changing the addresses.
   If not, the new data will not be written to the memory.
6) Press the PAUSE button of the adjusting remote commander.

Processing after completing adjustments

1) Set data: E0 to page: F, address: 10 and press the PAUSE button of the adjusting remote commander.
2) Set data: 10 to page: 6, address: 03.

For CCD-TR42/TR70/TR72/TR80

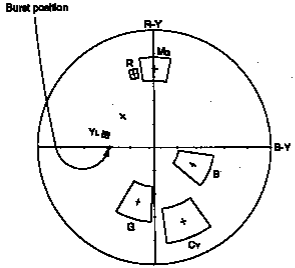

Fig. 7-1-12.

For CCD-TR82/TR850

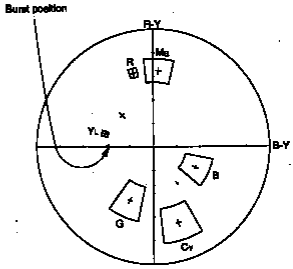

Fig. 7-1-13.

For CCD-TR400/TR750

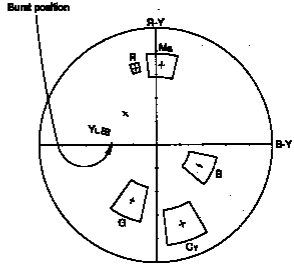

Fig. 7-1-14.

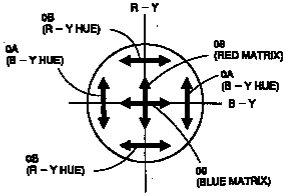

Fig. 7-1-15. Direction of the Movements of the Adjustment Address and Luminance Point

16. IRIS IN/OUT Adjustment (VC board)

For the unit to judge if the white balance is indoors or outdoors in auto white balance operations, measure the light level and write it in the EEPROM.
If the level is not correct, the white balance will not be accurate.

Subject	White pattern
Measurement Point	DDS display of EVF or TV monitor
Measuring Instrument	
Adjustment Page	F
Adjustment Address	13, 14

Adjusting method:

1) Page: 6, address: 00, data: 01
2) Release the page D protect.
   Page: 1, address: 00, data: 01
3) Set data: 21 to page: D, address: 03, and press the PAUSE button of the adjusting remote commander.
4) Set data: 0E to page: 6, address: 02.
5) Set data: 0B to page: 6, address: 01, and press the PAUSE button of the adjusting remote commander.
6) Read the DDS display data (Note 1), and take the upper two digits as D_1 and the lower two as D_2.
7) Convert D_1 to a decimal number and obtain D_1'. (Refer to Table 7-1-4. "Hexadecimal Notation-Decimal Notation Conversion Table".)
8) Calculate D_3' using the following equations. (Equations 1 and 2 are for decimal notation calculation)
   When $D_2 \geqq D0$
   $D_3'=D_1'-21$ ····· Equation 1
   When $D_2 < D0$
   $D_3'=D_1'-22$ ····· Equation 2
9) Convert D_3' to a hexadecimal number and obtain D_3.
10) Set D_3 to page: F, address: 13, and press the PAUSE button of the adjusting remote commander.
11) Set data: 09 to page: 6, address: 01, and press the PAUSE button of the adjusting remote commander.
    (IND0.5 SHUTTER mode setting)
12) Read the DDS display data (Note 1), and take the upper two digits as D_4 and the lower two as D_5.
13) Convert D_4 to a decimal number and obtain D_4'. (Refer to Table 7-1-4. "Hexadecimal Notation-Decimal Notation Conversion Table".)
14) Calculate D_6' using the following equations. (Equations 3 and 4 are for decimal notation calculation)
    When $D_5 \geqq F0$
    $D_6'=D_4'-13$ ····· Equation 3
    When $D_5 < F0$
    $D_6'=D_4'-14$ ····· Equation 4
15) Convert D_6' to a hexadecimal number and obtain D_6.
16) Set D_6 to page: F, address: 14, and press the PAUSE button of the adjusting remote commander.

Note 1: The right four digits of the display data at the right bottom side of the EVF and monitor TV is the LIGHT LEVEL data. If the lower digits change severely and cannot be read, record it on a tape once, play it back by frame feeding, and obtain the average value.

Processing after Completing Adjustments

1) Set data: 00 to page: D, address: 03, and press the PAUSE button of the adjusting remote commander.
2) Set data: 00 to page: 1, address: 00.
3) Set data: 00 to page: 6, address: 00, and press the PAUSE button of the adjusting remote commander.
4) Set data: 00 to page: 6, address: 02.

18. IRIS IN/OUT Adjustment (VC board)

For the unit to judge if the white balance is indoors or outdoors in auto white balance operations, measure the light level and write it in the EEPROM.

If the level is not correct, the white balance will not be accurate.

Subject	White pattern
Measurement Point	DDS display of EVF or TV monitor
Measuring Instrument	
Adjustment Page	F
Adjustment Address	13, 14

Adjusting method:

1) Page: 6, address: 00, data: 01
2) Release the page D protect.
   Page: 1, address: 00, data: 01
3) Set data: 21 to page: D, address: 03, and press the PAUSE button of the adjusting remote commander.
4) Set data: 0E to page: 6, address: 02.
5) Set data: 0B to page: 6, address: 01, and press the PAUSE button of the adjusting remote commander.
6) Read the DDS display data (Note 1), and take the upper two digits as D_1 and the lower two as D_2.
7) Convert D_1 to a decimal number and obtain D_1'. (Refer to Table 7-1-4. "Hexadecimal Notation-Decimal Notation Conversion Table".)
8) Calculate D_3' using the following equations. (Equations 1 and 2 are for decimal notation calculation)
   When $D_2 \geq D0$
   $D_3' = D_1' - 21$ ---------- Equation 1
   When $D_2 < D0$
   $D_3' = D_1' - 22$ ---------- Equation 2
9) Convert D_3' to a hexadecimal number and obtain D_3.
10) Set D_3 to page: F, address: 13, and press the PAUSE button of the adjusting remote commander.
11) Set data: 09 to page: 6, address: 01, and press the PAUSE button of the adjusting remote commander.
    (INDO.5 SHUTTER mode setting)
12) Read the DDS display data (Note 1), and take the upper two digits as D_4 and the lower two as D_5.
13) Convert D_4 to a decimal number and obtain D_4'. (Refer to Table 7-1-4. "Hexadecimal Notation-Decimal Notation Conversion Table".)
14) Calculate D_5' using the following equations. (Equations 3 and 4 are for decimal notation calculation)
    When $D_5 \geq F0$
    $D_5' = D_4' - 13$ ---------- Equation 3
    When $D_5 < F0$
    $D_5' = D_4' - 14$ ---------- Equation 4
15) Convert D_5' to a hexadecimal number and obtain D_5.
16) Set D_5 to page: F, address: 14, and press the PAUSE button of the adjusting remote commander.

Note 1: The right four digits of the display data at the right bottom side of the EVF and monitor TV is the LIGHT LEVEL data. If the lower digits change severely and cannot be read, record it on a tape once, play it back by frame feeding, and obtain the average value.

Processing after Completing Adjustments

1) Set data: 00 to page: D, address: 03, and press the PAUSE button of the adjusting remote commander.
2) Set data: 00 to page: 1, address: 00.
3) Set data: 00 to page: 6, address: 00, and press the PAUSE button of the adjusting remote commander.
4) Set data: 00 to page: 6, address: 02.

17. MAX GAIN Adjustment (VC board)

Correct the differences in the minimum illuminance.
If the illuminance is not consistent, the image level required for taking subjects in low illuminance will not be produced (dark).

Subject	White pattern standard picture frame
Measurement Point	TP607 (CAM Y)
Measuring Instrument	Oscilloscope
Adjustment Page	F
Adjustment Address	15
Specified Value	CCD-TR42/TR70/TR72/TR80/TR430 A=275 ± 10 mV CCD-TR82/TR550 A=195 ± 10 mV CCD-TR400/TR750 A=210 ± 10 mV

Adjusting method:

1) Page: 6, address: 00, data: 01
2) Set data: 19 to page: 6, address: 01, and press the PAUSE button of the adjusting remote commander.
3) Change the data of page: F, address: 15, and adjust so that the Y OUT signal level (A) becomes the specified value.
   Note: The data of address: 15 should be 70 to FF.
4) Press the PAUSE button of the adjusting remote commander.

Processing after completing adjustments

1) Set data: 00 to page: 6, address: 01, and press the PAUSE button of the adjusting remote commander.

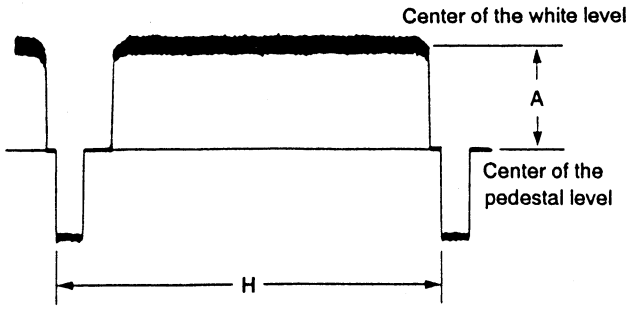

Fig. 7-1-16.

18. Auto White Balance Standard Data Input

Subject	White pattern standard picture frame
Adjustment Page	F
Adjustment Address	0C, 0D, 0E, 0F

Adjusting method:

1) Turn the power of the unit OFF/ON.
2) Page: 6, address: 00, data: 01
3) Check that the data of page: 6, address: 11 is 00.
4) Wait for 2 seconds.
5) Set data: 11 to page: 6, address: 01, and press the PAUSE button of the adjusting remote commander.
6) Set data: 0D to page: 6, address: 01, and press the PAUSE button of the adjusting remote commander.
   (When the standard data is taken in, the data will be automatically input to addresses 0C to 0F of page F.)
7) Check that the data of page: 6, address: 11 is 01.

Processing after completing adjustments

1) Set data: 00 to page: 6, address: 01, and press the PAUSE button of the adjusting remote commander.

17. MAX GAIN Adjustment (VC board)

Correct the differences in the minimum illuminance.
If the illuminance is not consistent, the image level required for taking subjects in low illuminance will not be produced (dark).

Subject	White pattern standard picture frame
Measurement Point	TP607 (CAM Y)
Measuring Instrument	Oscilloscope
Adjustment Page	F
Adjustment Address	15
Specified Value	CCD-TR42/TR70/TR72/TR80/TR430 A=275 ± 10 mV CCD-TR82/TR550 A=195 ± 10 mV CCD-TR400/TR750 A=210 ± 10 mV

Adjusting method:

1) Page: 6, address: 00, data: 01
2) Set data: 19 to page: 6, address: 01, and press the PAUSE button of the adjusting remote commander.
3) Change the data of page: F, address: 15, and adjust so that the Y OUT signal level (A) becomes the specified value.
   Note: The data of address: 15 should be 70 to FF.
4) Press the PAUSE button of the adjusting remote commander.

Processing after completing adjustments

1) Set data: 00 to page: 6, address: 01, and press the PAUSE button of the adjusting remote commander.

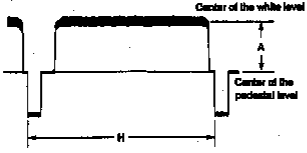

Fig. 7-1-16.

18. Auto White Balance Standard Data Input

Subject	White pattern standard picture frame
Adjustment Page	F
Adjustment Address	0C, 0D, 0E, 0F

Adjusting method:

1) Turn the power of the unit OFF/ON.
2) Page: 6, address: 00, data: 01
3) Check that the data of page: 6, address: 11 is 00.
4) Wait for 2 seconds.
5) Set data: 11 to page: 6, address: 01, and press the PAUSE button of the adjusting remote commander.
6) Set data: 0D to page: 6, address: 01, and press the PAUSE button of the adjusting remote commander.
   (When the standard data is taken in, the data will be automatically input to addresses 0C to 0F of page F.)
7) Check that the data of page: 6, address: 11 is 01.

Processing after completing adjustments

1) Set data: 00 to page: 6, address: 01, and press the PAUSE button of the adjusting remote commander.

19. Auto White Balance Adjustment

Adjust to the proper auto white balance output data.
If it is not correct, auto white balance and color reproducibility will be poor.

Subject	White pattern standard picture frame
Filter	Filter C14 for color temperature correction
Measurement Point	Check with the DDS display on the EVF or TV monitor
Measuring Instrument	
Adjustment Page	F
Adjustment Address	11 (NORM R) 12 (NORM B)
Specified Value	CCD-TR42/TR70/TR72/TR80/ TR400/TR530/TR750 R ratio: 2A40 to 2AC0 B ratio: 5E00 to 5F00 CCD-TR82/TR550 R ratio: 2B40 to 2BC0 B ratio: 5E00 to 5F00

Adjusting method:

1) Place the C14 filter for color temperature correction on the lens.
2) Page: 1, address: 00, data: 01
3) Set data: 21 to page: D, address: 03, and press the PAUSE button of the adjusting remote commander.
4) Page: 6, address: 00, data: 01
5) Set data: D0 to page: F, address: 10, and press the PAUSE button of the adjusting remote commander.
6) Set data: 04 to page: 6, address: 02.
7) Change the data of page: F, address: 11, and adjust the average value of the DDS display data (the display data at the bottom right of the EVF or the TV monitor) to the R ratio specified value.
8) Press the PAUSE button of the adjusting remote commander.
9) Set data: 05 to page: 6, address: 02.
10) Change the data of page: F, address: 12, and adjust the average value of the DDS display data to the B ratio specified value.
11) Press the PAUSE button of the adjusting remote commander.

Processing after completing adjustments

1) Set data: 00 to page: F, address: 10, and press the PAUSE button of the adjusting remote commander.
2) Set data: 00 to page: D, address: 03, and press the PAUSE button of the adjusting remote commander.
3) Set data: 00 to page: 6, address: 02.
4) Page D protect mode setting.
   Page: 1, address: 00, data: 00

20. White Balance Check

Subject	White pattern standard picture frame
Filter	Filter C14 for color temperature correction ND filter 1.0 and 0.3
Measurement Point	Video output terminal
Measuring Instrument	Vectorscope
Specified Value	Fig. 7-1-17. A to C

Checking method:

1) Check that the lens is not covered with either filter.
2) Page: 6, address: 00, data: 01
3) Set data: 0F to page: 6, address: 01, and press the PAUSE button of the adjusting remote commander.
4) Check that the center of the white luminance point is within the circle shown in Fig. 7-1-17.A.
5) Set data: 00 to page: 6, address: 01, and press the PAUSE button of the adjusting remote commander.
6) Set data: 23 to page: 6, address: 01, and press the PAUSE button of the adjusting remote commander.
7) Place the C14 filter on the lens.
8) Check that the center of the white luminance point settles in the circle shown in Fig. 7-1-17. B.
9) Remove the C14 filter, and place the ND filter 1.3 (1.0+0.3) on the lens.
10) Check that the center of the white luminance point settles in the circle shown in Fig. 7-1-17. C.

Processing after completing adjustments

1) Set data: 00 to page: 6, address: 01, and press the PAUSE button of the adjusting remote commander.
2) Set data: 00 to page: 6, address: 00, and press the PAUSE button.

19. Auto White Balance Adjustment

Adjust to the proper auto white balance output data.
If it is not correct, auto white balance and color reproducibility will be poor.

Subject	White pattern standard picture frame
Filter	Filter C14 for color temperature correction
Measurement Point	Check with the DDS display on the EVF or TV monitor
Measuring Instrument	
Adjustment Page	F
Adjustment Address	11 (NORM R) 12 (NORM B)
Specified Value	CCD-TR42/TR70/TR72/TR80/ TR400/TR530/TR750 R ratio: 2A40 to 2AC0 B ratio: 5E00 to 5F00 CCD-TR82/TR550 R ratio: 2B40 to 2BC0 B ratio: 5B00 to 5F00

Adjusting method:

1) Place the C14 filter for color temperature correction on the lens.
2) Page: 1, address: 00, data: 01
3) Set data: 21 to page: D, address: 03, and press the PAUSE button of the adjusting remote commander.
4) Page: 6, address: 00, data: 01
5) Set data: D0 to page: F, address: 10, and press the PAUSE button of the adjusting remote commander.
6) Set data: 04 to page: 6, address: 02.
7) Change the data of page: F, address: 11, and adjust the average value of the DDS display data (the display data at the bottom right of the EVF or the TV monitor) to the R ratio specified value.
8) Press the PAUSE button of the adjusting remote commander.
9) Set data: 05 to page: 6, address: 02.
10) Change the data of page: F, address: 12, and adjust the average value of the DDS display data to the B ratio specified value.
11) Press the PAUSE button of the adjusting remote commander.

Processing after completing adjustments

1) Set data: 00 to page: F, address: 10, and press the PAUSE button of the adjusting remote commander.
2) Set data: 00 to page: D, address: 03, and press the PAUSE button of the adjusting remote commander.
3) Set data: 00 to page: 6, address: 02.
4) Page D protect mode setting.
   Page: 1, address: 00, data: 00

20. White Balance Check

Subject	White pattern standard picture frame
Filter	Filter C14 for color temperature correction ND filter 1.0 and 0.3
Measurement Point	Video output terminal
Measuring Instrument	Vectorscope
Specified Value	Fig. 7-1-17. A to C

Checking method:

1) Check that the lens is not covered with either filter.
2) Page: 6, address: 00, data: 01
3) Set data: 0F to page: 6, address: 01, and press the PAUSE button of the adjusting remote commander.
4) Check that the center of the white luminance point is within the circle shown in Fig. 7-1-17.A.
5) Set data: 00 to page: 6, address: 01, and press the PAUSE button of the adjusting remote commander.
6) Set data: 23 to page: 6, address: 01, and press the PAUSE button of the adjusting remote commander.
7) Place the C14 filter on the lens.
8) Check that the center of the white luminance point settles in the circle shown in Fig. 7-1-17. B.
9) Remove the C14 filter, and place the ND filter 1.3 (1.0+0.3) on the lens.
10) Check that the center of the white luminance point settles in the circle shown in Fig. 7-1-17. C.

Processing after completing adjustments

1) Set data: 00 to page: 6, address: 01, and press the PAUSE button of the adjusting remote commander.
2) Set data: 00 to page: 6, address: 00, and press the PAUSE button.

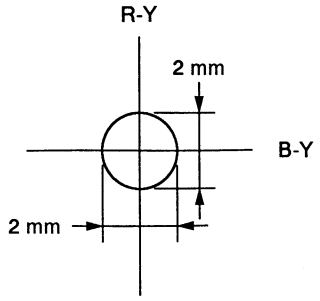

Fig. 7-1-17. A

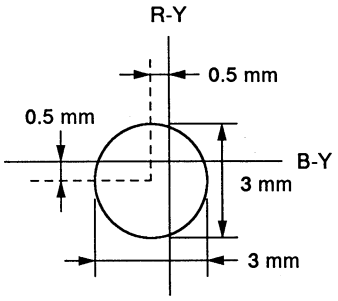

Fig. 7-1-17. B

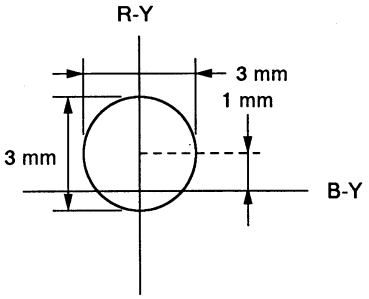

Fig. 7-1-17. C

21. VIDEO OUT Level Check

Subject	Color bar chart standard picture frame
Measurement Point	Video output terminal (Terminated at 75 Ω)
Measuring Instrument	Oscilloscope
Specified Value	Y level=660 ± 40 mV SYNC level=285 ± 20 mV BURST level=285 ± 20 mV

Checking method:

1) Check that the Y level, SYNC level and BURST level satisfy the specified values.

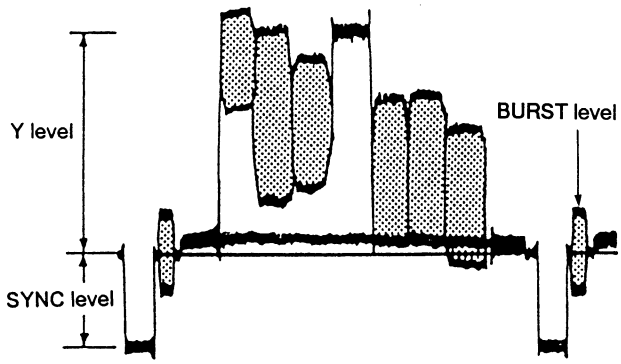

Fig. 7-1-18.

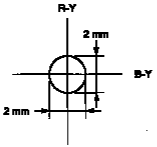

Fig. 7-1-17. A

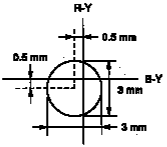

Fig. 7-1-17. B

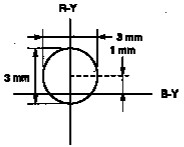

Fig. 7-1-17. C

21. VIDEO OUT Level Check

Subject	Color bar chart standard picture frame
Measurement Point	Video output terminal (Terminated at 75 Ω)
Measuring Instrument	Oscilloscope
Specified Value	Y level=660 ± 40 mV SYNC level=285 ± 20 mV BURST level=285 ± 20 mV

Checking method:

1) Check that the Y level, SYNC level and BURST level satisfy the specified values.

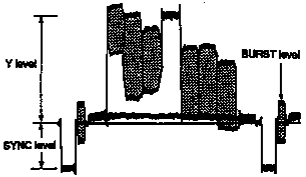

Fig. 7-1-18.

1-3. ELECTRONIC VIEWFINDER SYSTEM ADJUSTMENTS (CCD-TR42/TR72/TR82/TR400/TR430/ TR550/TR750)

1-3-1. Horizontal Slant Adjustment

Model	Playback
Signal	Alignment tape: For checking operations (WR5-5NSP) Monoscope section
Specified Value	± 1.5°

Adjusting method:

1) Adjust RV904 (BRIGHT) so that the CRT can be seen easily and clearly.
2) Loosen the DY (deflection yoke) tightening screw.
3) Rotate DY, and adjust the image so that it is horizontal.
4) Tighten the DY tightening nut.
   (Do not tighten it too tightly.)

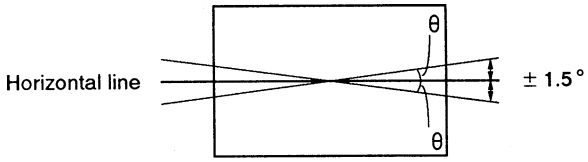

Specified value: The image should be within ± 1.5° of the horizontal line.

Fig. 7-1-19.

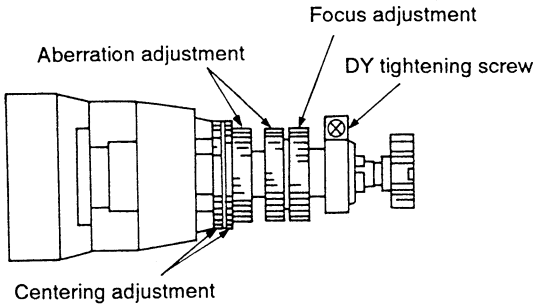

Fig. 7-1-20.

1-3-2. Centering Adjustment

Model	Playback
Signal	Alignment tape: For checking operations (WR5-5NSP) Monoscope section
Specified Value	± 4%

Adjusting method:

1) Use the centering adjustment ring and adjust so that the left, right, top, and bottom sides of the display are uniform. (Refer to Fig. 7-1-20.)
   Note: As the centering position changes due to earth magnetism, rotate it 360 ° in the horizontal direction, and adjust with the center section of the modifying position.

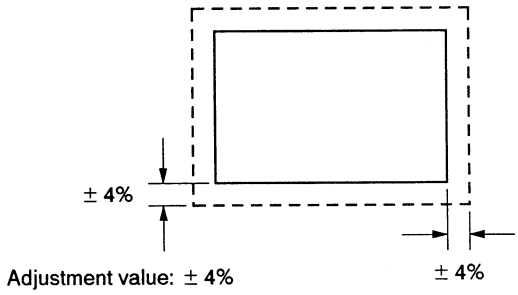

Fig. 7-1-21.

1-3-3. Focus Adjustment

Model	Playback
Signal	Alignment tape: For checking operations (WR5-5NSP) Monoscope section

Adjusting method:

1) Adjust the focus ring to obtain the optimum focus.
   (Refer to Fig. 7-1-20.)

1-3. ELECTRONIC VIEWFINDER SYSTEM ADJUSTMENTS (CCD-TR42/TR72/TR82/TR400/TR430/TR550/TR750)

1-3-1. Horizontal Slant Adjustment

Model	Playback
Signal	Alignment tape: For checking operations (WR5-5NSP) Monoscope section
Specified Value	± 1.5°

Adjusting method:

1) Adjust RV904 (BRIGHT) so that the CRT can be seen easily and clearly.
2) Loosen the DY (deflection yoke) tightening screw.
3) Rotate DY, and adjust the image so that it is horizontal.
4) Tighten the DY tightening nut.
   (Do not tighten it too tightly.)

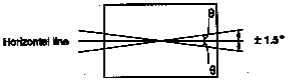

Specified value: The image should be within ± 1.5° of the horizontal line.

Fig. 7-1-19.

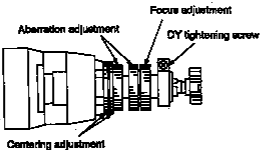

Fig. 7-1-20.

1-3-2. Centering Adjustment

Model	Playback
Signal	Alignment tape: For checking operations (WR5-5NSP) Monoscope section
Specified Value	± 4%

Adjusting method:

1) Use the centering adjustment ring and adjust so that the left, right, top, and bottom sides of the display are uniform. (Refer to Fig. 7-1-20.)

   Note: As the centering position changes due to earth magnetism, rotate it 360° in the horizontal direction, and adjust with the center section of the modifying position.

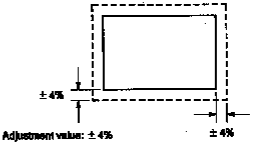

Fig. 7-1-21.

1-3-3. Focus Adjustment

Model	Playback
Signal	Alignment tape: For checking operations (WR5-5NSP) Monoscope section

Adjusting method:

1) Adjust the focus ring to obtain the optimum focus.
   (Refer to Fig. 7-1-20.)

1-3-4. Aberration Adjustment

Model	E-E
Signal	Dot pattern
Specified Value	T < 2 • D, F < D

Adjusting method:

1) Adjust the aberration adjustment ring so that the tracing of the dot becomes less than twice the diameter of the dot, or the fan aberration becomes less than the diameter of the dot.
2) If the centering becomes displaced here, perform the centering adjustment from the beginning again.

Fig. 7-1-22.

1-3-5. Horizontal Amplitude Adjustment (VF-65 board)

Model	Playback
Signal	Alignment tape: For checking operations (WR5-5NSP) Monoscope section
Adjusting Element	C909
Specified Value	6 ± 2%

Adjusting method:

1) Rotate RV903, and adjust the top and bottom sides of the monoscope image to the top and bottom edges of the display.
2) Rotate RV904 so that the brightness is the normal level.
3) Adjust the pattern (A) of the H size adjustment capacitor (C909) to "short" or "open", so that the horizontal direction over scan becomes 6 ± 2% (Left and right totals). (Refer to Fig. 7-1-24.)

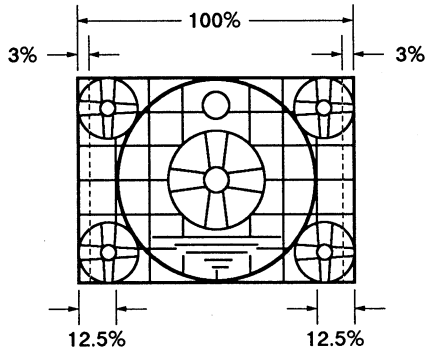

Fig. 7-1-23.

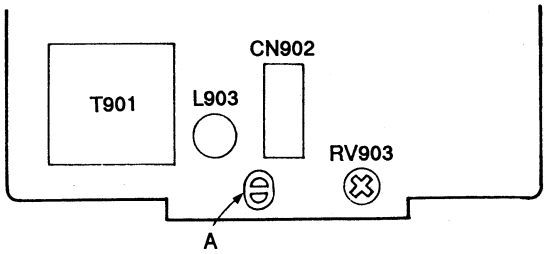

VF-65 board (Component side)

Section A	Size H
Open	Small
Short	Big

Fig. 7-1-24.

1-3-4. Aberration Adjustment

Model	B-B
Signal	Dot pattern
Specified Value	T < 2 • D, F < D

Adjusting method:

1) Adjust the aberration adjustment ring so that the tracing of the dot becomes less than twice the diameter of the dot, or the fan aberration becomes less than the diameter of the dot.
2) If the centering becomes displaced here, perform the centering adjustment from the beginning again.

Fig. 7-1-22.

1-3-5. Horizontal Amplitude Adjustment (VF-85 board)

Model	Playback
Signal	Alignment tape: For checking operations (WR5-5NSP) Monoscope section
Adjusting Element	C909
Specified Value	6 ± 2%

Adjusting method:

1) Rotate RV903, and adjust the top and bottom sides of the monoscope image to the top and bottom edges of the display.
2) Rotate RV904 so that the brightness is the normal level.
3) Adjust the pattern (A) of the H size adjustment capacitor (C909) to "short" or "open", so that the horizontal direction over scan becomes 6 ± 2% (Left and right totals). (Refer to Fig. 7-1-24.)

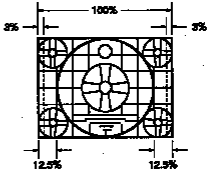

Fig. 7-1-23.

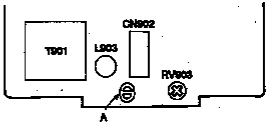

VF-85 board (Component side)

Section A	Size H
Open	Small
Short	Big

Fig. 7-1-24.

1-3-6. Vertical Amplitude Adjustment (VF-65 board)

Model	Playback
Signal	Alignment tape: For checking operations (WR5-5NSP) Monoscope section
Adjusting Element	RV903
Specified Value	5 ± 2%

Adjusting method:

1) Adjust RV903 so that the vertical direction over scan becomes 5 ± 2% (Top and bottom totals).

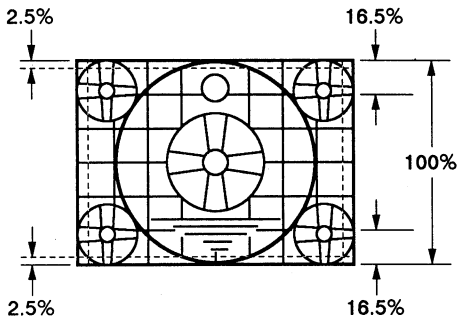

Fig. 7-1-25.

1-3-7. Brightness Adjustments (VF-65 board)

Model	Playback
Signal	Alignment tape: For checking operations (WR5-5NSP) Monoscope section
Adjusting Element	RV904

Adjusting method:

1) Rotate RV904, and adjust so that the bright/dark sections of the gray scale are displayed correctly. (The bright section should be unsatisfactory till the cross hatch appears vague in the monoscope circle. The dark section should be unsatisfactory till the darkest section and the second darkest section of the gray scale cannot be differentiated.)

1-3-8. Horizontal Amplitude, Vertical Amplitude, Focus Check

"1-3-5. Horizontal Amplitude Adjustment" and "1-3-6. Vertical Amplitude Adjustment" should both satisfy the specified values. If not, perform the adjustments from the beginning again. In this case, perform [1-3-7. Brightness, Contrast Adjustments] again. Moreover, check the focus, and if it found to be vague, perform "1-3-3. Focus Adjustment" and "1-3-4. Aberration Adjustment".

1-4. COLOR ELECTRONIC VIEWFINDER SYSTEM ADJUSTMENTS (CCD-TR70/TR80)

Note 1: The backlight (fluorescent tube) is driven by a 800 Vp-p, 16 kHz AC power supply.
Therefore, be careful not to touch the backlight holder as you will receive an electric shock.

Note 2: When replacing the LCD unit, ensure there will be no damages by static electricity.

[Adjusting connector]

Some measuring points for adjusting the view-finder are concentrated at CN902 of the VF-67 board. Connect the measuring equipments via the measuring pin tool. The following table lists the pin numbers and signal names of CN902.

Pin No.	Signal Name	Pin No.	Signal Name
1	LC COM	2	EVF GND
3	G OUT	4	13.5V
5	NC	6	12V
7	R OUT	8	B OUT
9	NC	10	PCO

Table 7-1-6.

[Power Supply Voltage]

Adjust the power supply voltage for the battery pin so that Pin ⑦ (EVF UNREG) of CN851 of the VF-66 board becomes 6.0 ± 0.1 Vdc.

[Video Input Signal for Adjusting]

If the signal column specifies "Color bar signal whose chroma signal and burst signal are turned off", input a color bar signal whose chroma signal and burst signal have been turned off to the video input pin as the video input signal for adjusting. Check that the signal level of Pin ⑪ of CN851 of the VF-66 board is 1.0 ± 0.12 Vp-p before adjusting.

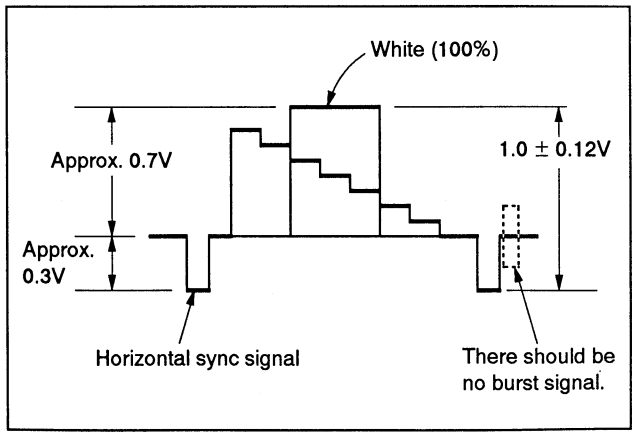

Fig. 7-1-26. Color bar signal whose chroma signal and burst signals are turned off

1-3-6. Vertical Amplitude Adjustment (VF-65 board)

Model	Playback
Signal	Alignment tape: For checking operations (WR5-5NSP) Monoscope section
Adjusting Element	RV903
Specified Value	5 ± 2%

Adjusting method:

1) Adjust RV903 so that the vertical direction over scan becomes 5 ± 2% (Top and bottom totals).

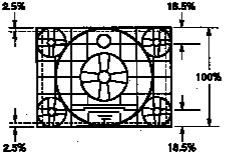

Fig. 7-1-25.

1-3-7. Brightness Adjustments (VF-65 board)

Model	Playback
Signal	Alignment tape: For checking operations (WR5-5NSP) Monoscope section
Adjusting Element	RV904

Adjusting method:

1) Rotate RV904, and adjust so that the bright/dark sections of the gray scale are displayed correctly. (The bright section should be unsatisfactory till the cross hatch appears vague in the monoscope circle. The dark section should be unsatisfactory till the darkest section and the second darkest section of the gray scale cannot be differentiated.)

1-3-8. Horizontal Amplitude, Vertical Amplitude, Focus Check

"1-3-5. Horizontal Amplitude Adjustment" and "1-3-6. Vertical Amplitude Adjustment" should both satisfy the specified values. If not, perform the adjustments from the beginning again. In this case, perform [1-3-7. Brightness, Contrast Adjustments] again. Moreover, check the focus, and if it found to be vague, perform "1-3-3. Focus Adjustment" and "1-3-4. Aberration Adjustment".

1-4. COLOR ELECTRONIC VIEWFINDER SYSTEM ADJUSTMENTS (CCD-TR70/TR90)

Note 1: The backlight (fluorescent tube) is driven by a 800 Vp-p, 16 kHz AC power supply.
Therefore, be careful not to touch the backlight holder as you will receive an electric shock.

Note 2: When replacing the LCD unit, ensure there will be no damages by static electricity.

[Adjusting connector]

Some measuring points for adjusting the view-finder are concentrated at CN902 of the VF-67 board. Connect the measuring equipments via the measuring pin tool. The following table lists the pin numbers and signal names of CN902.

Pin No.	Signal Name	Pin No.	Signal Name
1	LC COM	2	EVF GND
3	G OUT	4	13.5V
5	NC	6	12V
7	R OUT	8	B OUT
9	NC	10	PCO

Table 7-1-6.

[Power Supply Voltage]

Adjust the power supply voltage for the battery pin so that Pin ⑦ (EVF UNREG) of CN851 of the VF-66 board becomes 6.0 ± 0.1 Vdc.

[Video Input Signal for Adjusting]

If the signal column specifies "Color bar signal whose chroma signal and burst signal are turned off", input a color bar signal whose chroma signal and burst signal have been turned off to the video input pin as the video input signal for adjusting. Check that the signal level of Pin ⑪ of CN851 of the VF-66 board is 1.0 ± 0.12 Vp-p before adjusting.

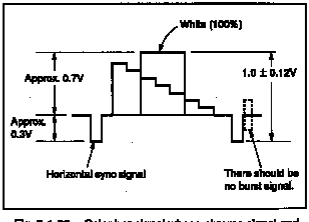

Fig. 7-1-26. Color bar signal whose chroma signal and burst signals are turned off

1. Current Consumption Adjustment (VF-66 board)

Adjust the luminance and color temperature of the back light.
If these are not correct, the image will be brighter or darker than normal.

Mode	Stop
Signal	Color bar signal whose chroma signal and burst signal are turned off
Measurement Point	Remove L851 and measure + : Pin ⑦ of CN851 − : ⊕ pin of C861
Measuring Instrument	Ammeter
Adjustment Page	D
Adjustment Address	B7
Specified Value	55 ± 5 mA

Note 1: Wait for 30 secs. after the power supply has been turned on before this adjustment.
Note 2: After adjusting, connect L851.

Adjusting method:
1) Check that the voltage of Pin ⑦ of CN851 is 6.0 ± 0.1 Vdc.
2) Page: 1, address: 00, data: 01
3) Change the data of page: D, address: B7, and adjust the current consumption to 55 ± 5 mA.
4) Press the PAUSE button of the adjusting remote commander.

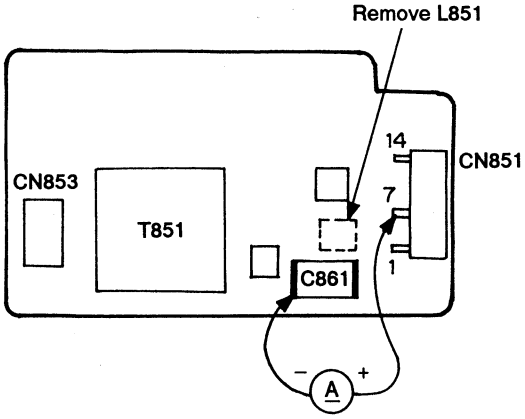

VF-66 BOARD Component side

Fig. 7-1-27.

2. Power Supply Voltage Check (VF-67 board)

Mode	Record
Measuring Instrument	Digital voltmeter
13.5V check	
Measurement Point	Pin ⑭ of CN901
Specified Value	13.5 ± 0.3 Vdc
12.0V check	
Measurement Point	Pin ⑬ of CN901
Specified Value	12.0 ± 0.3 Vdc

3. EVR Initial Data Input

Mode	STOP
Signal	Arbitary
Adjustment Page	D

Adjusting method:
1) Page: 1, address: 00, data: 01
2) Select page D, and input the data in the following table.
   Note: To write in the nonvolatile memory (EEPROM), press the PAUSE button of the adjusting remote commander each time the data is set.

Address	Data
B0 (BRIGHT)	A0
B1 (COLOR)	AE
B2 (HUE)	95
B3 (SUB BRIGHT R)	7A
B4 (SUB BRIGHT B)	6A
B5 (CONTRAST)	70
B6 (VCO)	90
B7 (INVERTER CURRENT)	35
B8 (SUB CONTRAST R)	7A
B9 (SUB CONTRAST B)	7A
BA (GAMMA 1)	70
BB (GAMMA 2)	F0

1. Current Consumption Adjustment (VF-86 board)

Adjust the luminance and color temperature of the back light.
If these are not correct, the image will be brighter or darker than normal.

Mode	Stop
Signal	Color bar signal whose chroma signal and burst signal are turned off
Measurement Point	Remove LB51 and measure + : Pin ⑦ of CN851 − : ⊕ pin of CB61
Measuring Instrument	Ammeter
Adjustment Page	D
Adjustment Address	B7
Specifiml Value	55 ± 5 mA

Note 1: Wait for 30 secs. after the power supply has been turned on before this adjustment.
Note 2: After adjusting, connect LB51.

Adjusting method:
1) Check that the voltage of Pin ⑦ of CN851 is 6.0 ± 0.1 Vdc.
2) Page: 1, address: 00, data: 01
3) Change the data of page: D, address: B7, and adjust the current consumption to 55 ± 5 mA.
4) Press the PAUSE button of the adjusting remote commander.

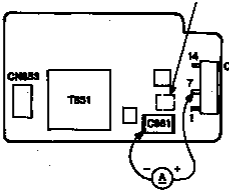

VF-89 BOARD Component side

Fig. 7-1-27.

2. Power Supply Voltage Check (VF-87 board)

Mode	Record
Measuring Instrument	Digital voltmeter
13.5V check	
Measurement Point	Pin ⑩ of CN901
Specified Value	13.5 ± 0.3 Vdc
12.0V check	
Measurement Point	Pin ⑩ of CN901
Specified Value	12.0 ± 0.3 Vdc

3. EVR Initial Data Input

Mode	STOP
Signal	Arbitary
Adjustment Page	D

Adjusting method:
1) Page: 1, address: 00, data: 01
2) Select page D, and input the data in the following table.
   Note: To write in the nonvolatile memory (BEPROM), press the PAUSE button of the adjusting remote commander each time the data is set.

Address	Data
B0 (BRIGHT)	A0
B1 (COLOR)	AE
B2 (HUE)	95
B3 (SUB BRIGHT R)	7A
B4 (SUB BRIGHT B)	6A
B5 (CONTRAST)	70
B6 (VCO)	90
B7 (INVERTER CURRENT)	35
B8 (SUB CONTRAST R)	7A
B9 (SUB CONTRAST B)	7A
BA (GAMMA 1)	70
BB (GAMMA 2)	F0

4. VCO Adjustment (VF-67 board)

Set the free running frequency of the VCO.
If it is not correct, the image will waver.

Mode	Record
Signal	Color bar
Measurement Point	Pin ⑩ of CN902 (PCO)
Measuring Instrument	Oscilloscope (DC range)
Adjustment Page	D
Adjustment Address	B6
Specified Value	A=2.8 ± 0.1V

Adjusting method:

1) Check tha GND level of the oscilloscope.
2) Page: 1, address: 00, data: 01
3) Change the data of page: D, address: B6, and adjust the PCO voltage (A) to the specified value.
4) Press the PAUSE button of the adjusting remote commander.

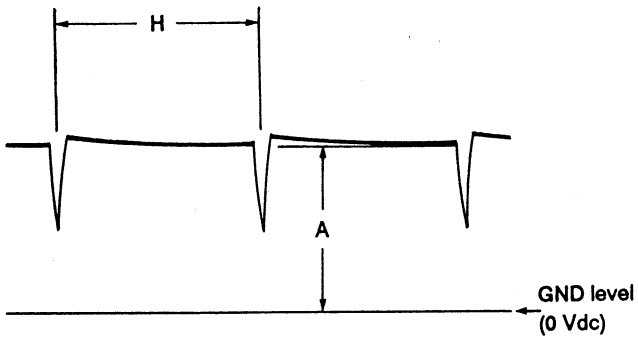

Fig. 7-1-28.

5. Bright Adjustment (VF-67 board)

Adjust to the proper LCD panel driving video signal level.
If it is not correct, the image will be saturated (whitish) or blackish.

Mode	Record
Signal	No signal
Measurement Point	Pin ③ of CN902 (G OUT)
Measuring Instrument	Oscilloscope
Adjustment Page	D
Adjustment Address	B0 (BRIGHT)
Specified Value	A=7.0 ± 0.1V

Adjusting method:

1) Page: 1, address: 00, data: 01
2) Change the data of page: D, address: B0, and adjust the potential difference (A) between the reversed waveform pedestal and the non reversed waveform pedestal to the specified value.
3) Press the PAUSE button of the adjusting remote commander.

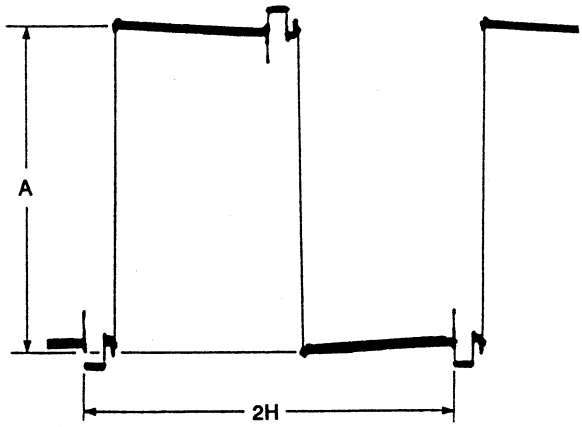

Fig. 7-1-29.

4. VCO Adjustment (VF-67 board)

Set the free running frequency of the VCO.
If it is not correct, the image will waver.

Mode	Record
Signal	Color bar
Measurement Point	Pin ⑥ of CN902 (PCO)
Measuring Instrument	Oscilloscope (DC range)
Adjustment Page	D
Adjustment Address	B6
Specified Value	A=2.8 ± 0.1V

Adjusting method:

1) Check the GND level of the oscilloscope.
2) Page: 1, address: 00, data: 01
3) Change the data of page: D, address: B6, and adjust the PCO voltage (A) to the specified value.
4) Press the PAUSE button of the adjusting remote commander.

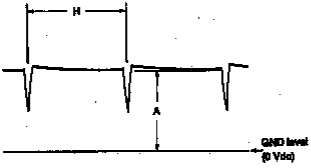

Fig. 7-1-28.

5. Bright Adjustment (VF-67 board)

Adjust to the proper LCD panel driving video signal level.
If it is not correct, the image will be saturated (whitish) or blackish.

Mode	Record
Signal	No signal
Measurement Point	Pin ⑩ of CN902 (G OUT)
Measuring Instrument	Oscilloscope
Adjustment Page	D
Adjustment Address	B0 (BRIGHT)
Specified Value	A=7.0 ± 0.1V

Adjusting method:

1) Page: 1, address: 00, data: 01
2) Change the data of page: D, address: B0, and adjust the potential difference (A) between the reversed waveform pedestal and the not reversed waveform pedestal to the specified value.
3) Press the PAUSE button of the adjusting remote commander.

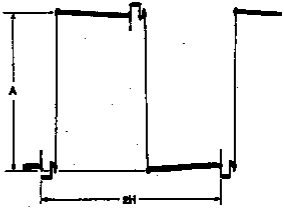

Fig. 7-1-29.

6. Contrast Adjustment (VF-67 board)

Set the contrast of the image.

If the contrast is not correct, the image will be blur (whitish) or saturated.

Mode	Record
Signal	Color bar signal whose chroma and burst signals are turned off
Measurement Point	Pin ③ of CN902 (G OUT)
Measuring Instrument	Oscilloscope External trigger: Pin ㉞ of IC902 (FRP)
Adjustment Page	D
Adjustment Address	B5 (CONTRAST)
Specified Value	A=2.0 ± 0.1V

Adjusting method:

1) Page: 1, address: 00, data: 01
2) Change the data of page: D, address: B5, and adjust the voltage (A) between the white (100%) and pedestal to the specified value.
3) Press the PAUSE button of the adjusting remote commander.

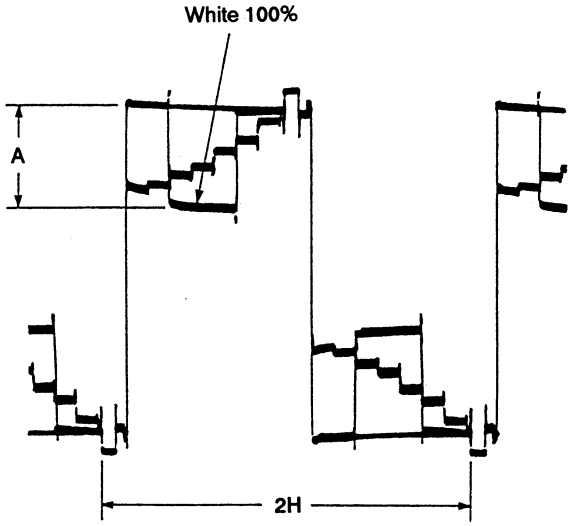

Fig. 7-1-30.

7. SUB BRIGHT R Preset Adjustment (1) (VF-67 board)

White balance rough adjustment (1)

Mode	Record
Signal	No signal
Measurement Point	Pin ⑦ of CN902 (R OUT)
Measuring Instrument	Oscilloscope
Adjustment Page	D
Adjustment Address	B3 (SUB BRIGHT R)
Specified Value	A=7.0 ± 0.1V

Adjusting method:

1) Page: 1, address: 00, data: 01
2) Change the data of page: D, address: B3 and adjust the potential difference (A) between the reversed waveform pedestal and the non reversed waveform pedestal to the specified value.
3) Press the PAUSE button of the adjusting remote commander.

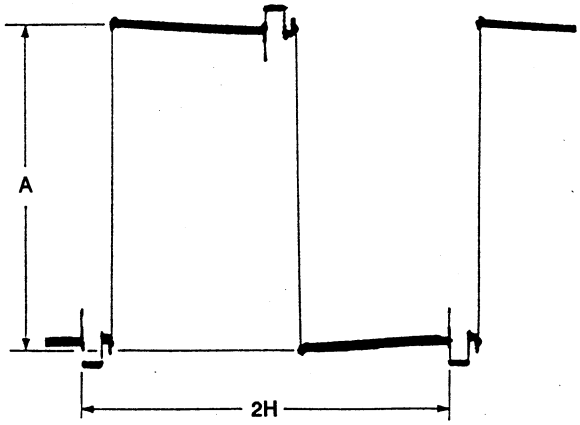

Fig. 7-1-31.

6. Contrast Adjustment (VF-67 board)

Set the contrast of the image.
If the contrast is not correct, the image will be blur (whitish) or saturated.

Mode	Record
Signal	Color bar signal whose chroma and burst signals are turned off
Measurement Point	Pin ㉓ of CN902 (G OUT)
Measuring Instrument	Oscilloscope External trigger: Pin ⑯ of IC902 (FRP)
Adjustment Page	D
Adjustment Address	B5 (CONTRAST)
Specified Value	A=2.0 ± 0.1V

Adjusting method:

1) Page: 1, address: 00, data: 01
2) Change the data of page: D, address: B5, and adjust the voltage (A) between the white (100%) and pedestal to the specified value.
3) Press the PAUSE button of the adjusting remote commander.

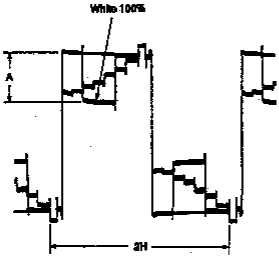

Fig. 7-1-30.

7. SUB BRIGHT R Preset Adjustment (1) (VF-67 board)

White balance rough adjustment (1)

Mode	Record
Signal	No signal
Measurement Point	Pin ⑦ of CN902 (R OUT)
Measuring Instrument	Oscilloscope
Adjustment Page	D
Adjustment Address	B3 (SUB BRIGHT R)
Specified Value	A=7.0 ± 0.1V

Adjusting method:

1) Page: 1, address: 00, data: 01
2) Change the data of page: D, address: B3 and adjust the potential difference (A) between the reversed waveform pedestal and the non reversed waveform pedestal to the specified value.
3) Press the PAUSE button of the adjusting remote commander.

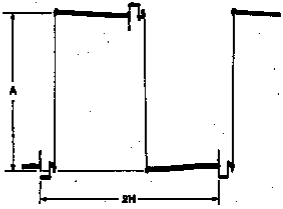

Fig. 7-1-31.

8. SUB BRIGHT B Preset Adjustment (2) (VF-67 board)

White balance rough adjustment (2)

Mode	Record
Signal	No signal
Measurement Point	Pin ⑧ of CN902 (B OUT)
Measuring Instrument	Oscilloscope
Adjustment Page	D
Adjustment Address	B4 (SUB BRIGHT B)
Specified Value	A=7.1 ± 0.1V

Adjusting method:

1) Page: 1, address: 00, data: 01
2) Change the data of page: D, address: B4 and adjust the potential difference (A) between the reversed waveform pedestal and the non reversed waveform pedestal to the specified value.
3) Press the PAUSE button of the adjusting remote commander.

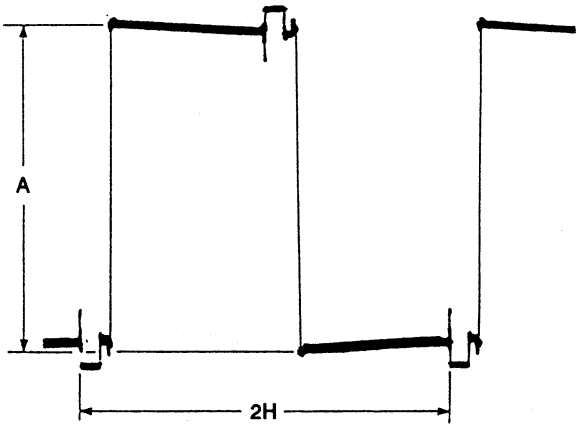

Fig. 7-1-32.

9. White Balance Adjustment

Adjust to the proper white balance level.
If it is not correct, the color reproducibility of the LCD panel will be poor.

Mode	Record
Signal	Color bar signal whose chroma and burst signals are turned off
Measurement Point	Check on the LCD display
Measuring Instrument	
Adjustment Page	D
Adjustment Address	B3 (SUB BRIGHT R), B4 (SUB BRIGHT B)
Specified Value	The display should not be colored

Note: Wait for more than 1 minute after the power supply has been turned on before this adjustment.

Adjusting method:

1) Page: 1, address: 00, data: 01
2) Check that the LCD display is not colored. If it is, change the data of address: B3 and address: B4 of page: D, and adjustment the display is not colored.
3) Press the PAUSE button of the adjusting remote commander.

8. SUB BRIGHT B Preset Adjustment (2) (VF-67 board)

White balance rough adjustment (2)

Mode	Record
Signal	No signal
Measurement Point	Pin ⑧ of CN902 (B OUT)
Measuring Instrument	Oscilloscope
Adjustment Page	D
Adjustment Address	B4 (SUB BRIGHT B)
Specified Value	A=7.1 ± 0.1V

Adjusting method:

1) Page: 1, address: 00, data: 01
2) Change the data of page: D, address: B4 and adjust the potential difference (A) between the reversed waveform pedestal and the non reversed waveform pedestal to the specified value.
3) Press the PAUSE button of the adjusting remote commander.

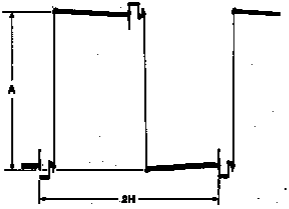

Fig. 7-1-32.

9. White Balance Adjustment

Adjust to the proper white balance level.

If it is not correct, the color reproducibility of the LCD panel will be poor.

Mode	Record
Signal	Color bar signal whose chrome and burst signals are turned off
Measurement Point	Check on the LCD display
Measuring Instrument	
Adjustment Page	D
Adjustment Address	B3 (SUB BRIGHT R), B4 (SUB BRIGHT B)
Specified Value	The display should not be colored

Note: Wait for more than 1 minute after the power supply has been turned on before this adjustment.

Adjusting method:

1) Page: 1, address: 00, data: 01
2) Check that the LCD display is not colored. If it is, change the data of address: B3 and address: B4 of page: D, and adjustment the display is not colored.
3) Press the PAUSE button of the adjusting remote commander.

1-5. ARRANGEMENT DIAGRAM FOR ADJUSTMENT PARTS

DD BOARD (CONDUCTOR SIDE)

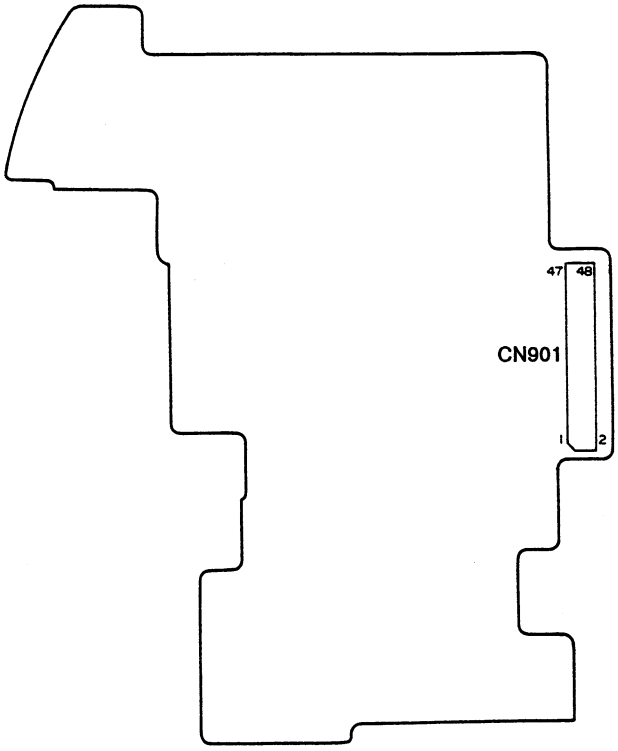

DD BOARD (COMPONENT SIDE)

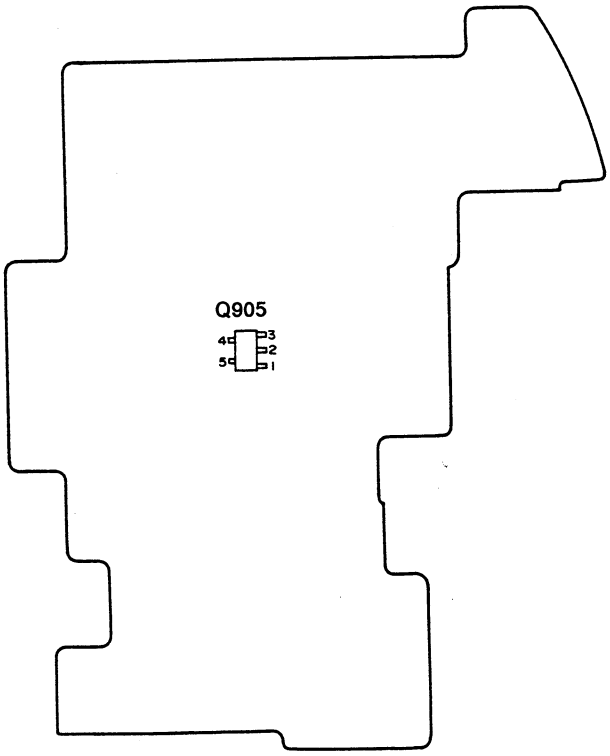

CCD-TR42/TR72/TR82/TR400/TR430/TR550/TR750

VF-65 BOARD (COMPONENT SIDE)

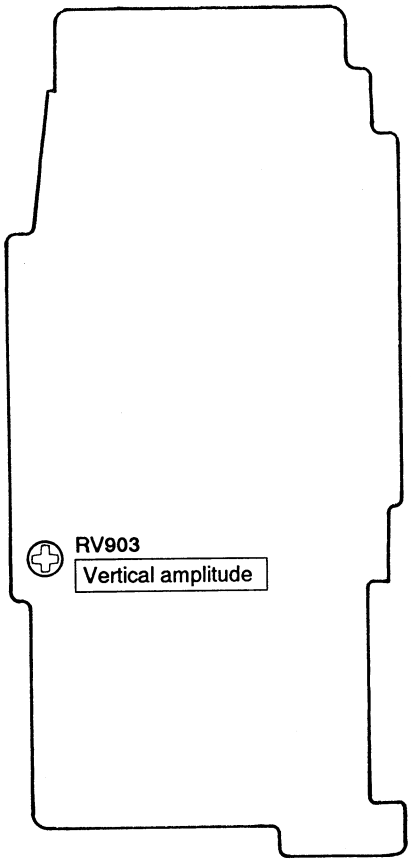

VF-65 BOARD (CONDUCTOR SIDE)

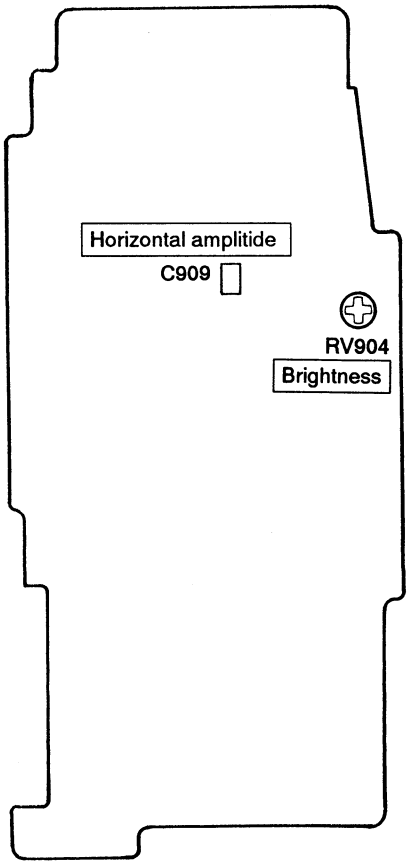

CCD-TR70/TR80

VF-66 BOARD (COMPONENT SIDE)

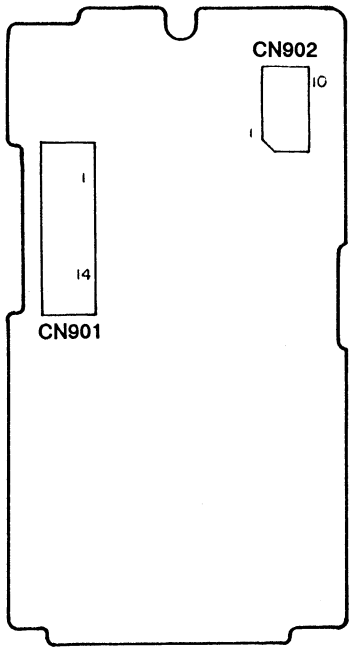

1-5. ARRANGEMENT DIAGRAM FOR ADJUSTMENT PARTS

DD BOARD (CONDUCTOR SIDE)

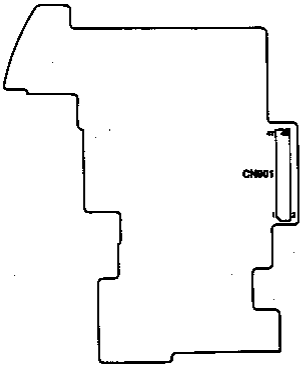

DD BOARD (COMPONENT SIDE)

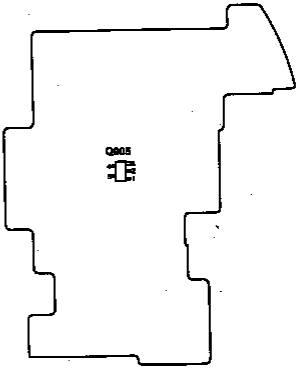

CCD-TR42/TR72/TR82/TR400/TR430/TR550/TR750

VF-65 BOARD (COMPONENT SIDE)

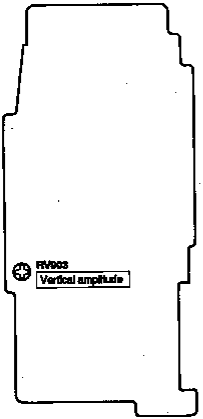

VF-65 BOARD (CONDUCTOR SIDE)

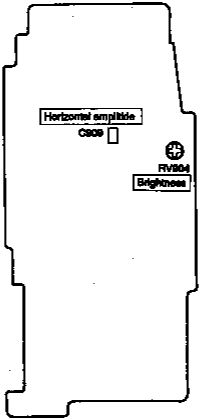

CCD-TR70/TR80

VF-66 BOARD
(COMPONENT SIDE)

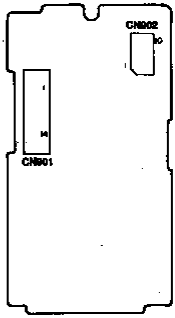

VC BOARD (COMPONENT SIDE)

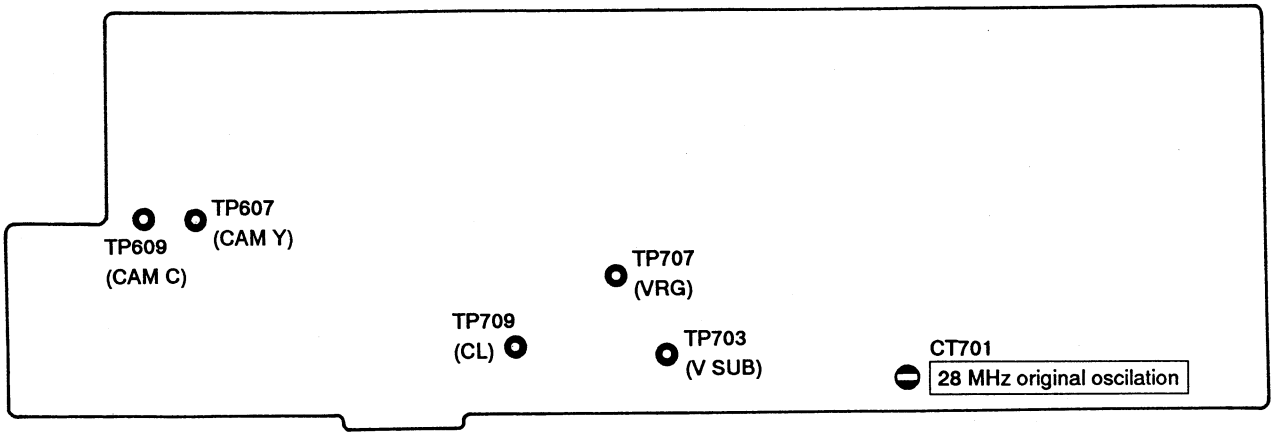

VC BOARD (COMPONENT SIDE)

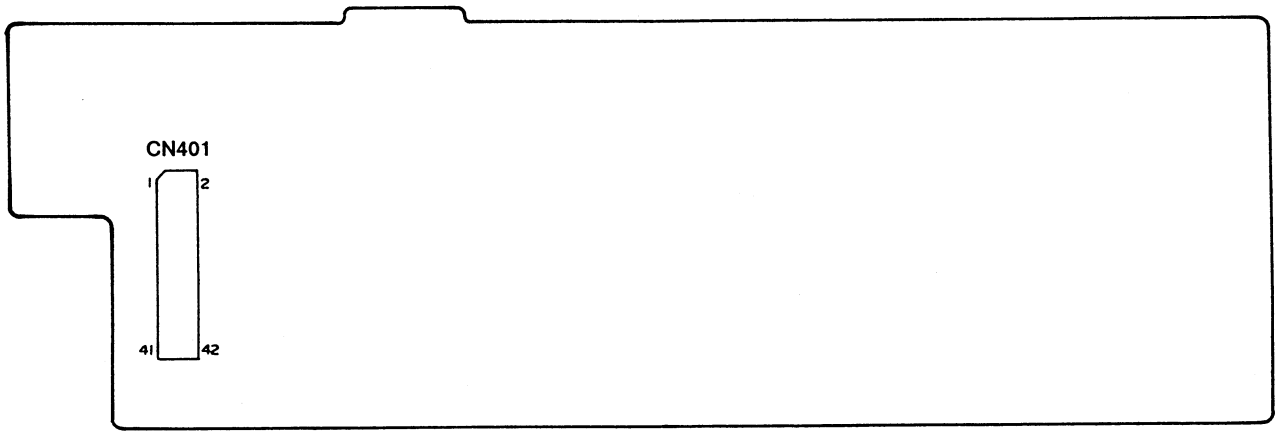

VF-66 BOARD (CONDUCTOR SIDE)

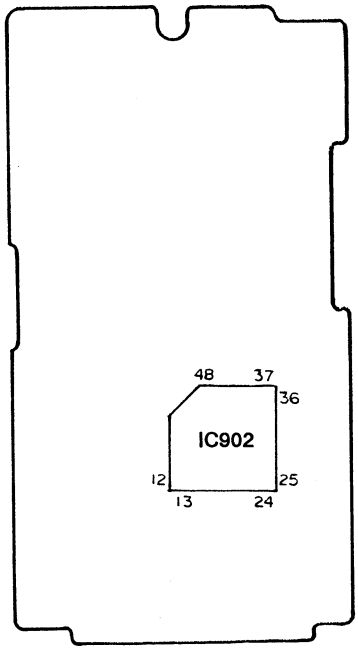

FP-89 BOARD

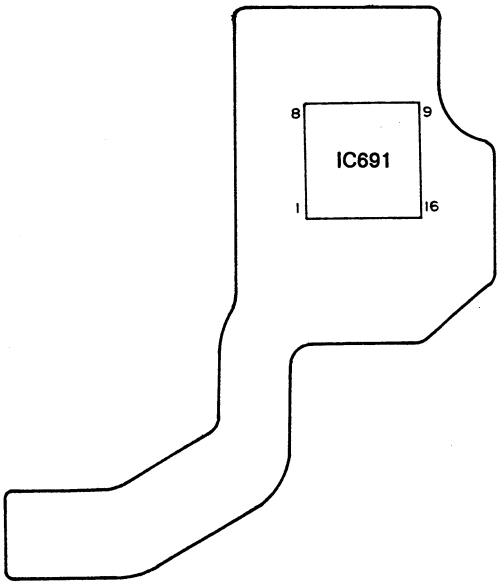

VC BOARD (COMPONENT SIDE)

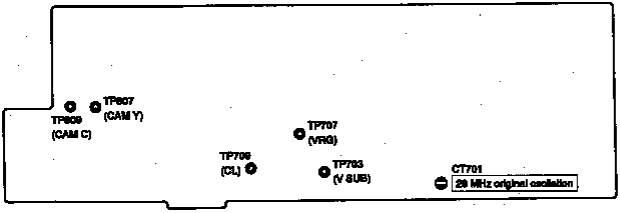

VC BOARD (COMPONENT SIDE)

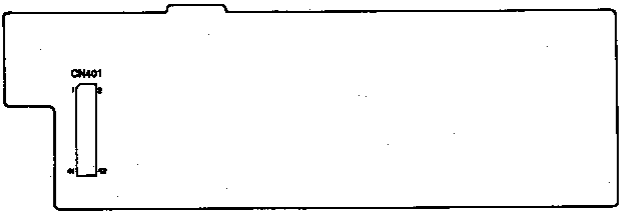

VF-68 BOARD
(CONDUCTOR SIDE)

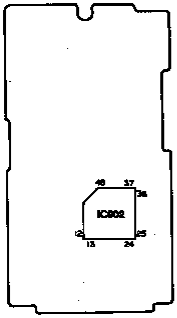

FP-89 BOARD

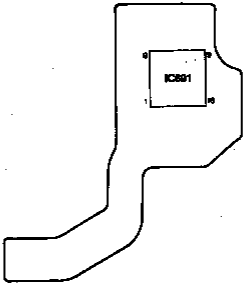

7-2. MECHANICAL SECTION ADJUSTMENTS

Mechanism Parts Adjustments

For details on the adjustments and checks of mechanical section and replacements of mechanism parts, refer to the separate volume-"8 mm Video Mechanism Adjustment Manual Ⅳ A Mechanism".

2-1. OPERATING WITHOUT A CASSETTE

1) Refer to "2. DISASSEMBLY" and supply the power with the cabinet removed. (So that the mechanical deck can be operated.)
2) Connect the adjusting remote commander to the remote terminal.
3) Turn on the HOLD switch of the adjusting remote commander.
4) Close the cassette compartment without loading a cassette and complete loading.
5) Set data: 01 to page: 1, address: 00.
   (Release of the protect)
6) Set data: 01 to page: D, address: 02, and press the PAUSE button of the adjusting remote commander.
   (Emergency prohibition mode setting)
7) Set data: 04 to page: D, address: 03, and press the PAUSE button of the adjusting remote commander.
   (Sensor ineffective mode setting)

By carrying out the above procedure, the unit can be operated without loading a cassette.
Be sure to carry out "Processing after Operations" after checking the operations.
Set the data of page: D, address: 03 to the following if the sensor ineffective mode, forced VTR power supply ON mode or forced camera power supply ON mode are to be used together.

Forced VTR power supply ON mode ····· 06
Forced camera power supply ON mode ····· 05

[Processing after Operations]

1) Set data: 01 to page: 1, address: 00.
   (Release of protect)
2) Set data: 00 to page D, address: 02, and press the PAUSE button of the adjusting remote commander.
   (Release of the emergency prohibition mode)
3) Set data: 00 to page: D, address: 03, and press the PAUSE button of the adjusting remote commander.
   (Release of the sensor ineffective mode)
4) Set data: 00 to page: 1, address: 00.
   (Protect setting)
5) Disconnect the power supply of the unit.

7-2. MECHANICAL SECTION ADJUSTMENTS

Mechanism Parts Adjustments

For details on the adjustments and checks of mechanical section and replacements of mechanism parts, refer to the separate volume-"8 mm Video Mechanism Adjustment Manual IV A Mechanism ".

2-1. OPERATING WITHOUT A CASSETTE

1) Refer to "2. DISASSEMBLY" and supply the power with the cabinet removed. (So that the mechanical deck can be operated.)
2) Connect the adjusting remote commander to the remote terminal.
3) Turn on the HOLD switch of the adjusting remote commander.
4) Close the cassette compartment without loading a cassette and complete loading.
5) Set data: 01 to page: 1, address: 00.
   (Release of the protect)
6) Set data: 01 to page: D, address: 02, and press the PAUSE button of the adjusting remote commander.
   (Emergency prohibition mode setting)
7) Set data: 04 to page: D, address: 03, and press the PAUSE button of the adjusting remote commander.
   (Sensor ineffective mode setting)

By carrying out the above procedure, the unit can be operated without loading a cassette.
Be sure to carry out "Processing after Operations" after checking the operations.
Set the data of page: D, address: 03 to the following if the sensor ineffective mode, forced VTR power supply ON mode or forced camera power supply ON mode are to be used together.

Forced VTR power supply ON mode····· 06
Forced camera power supply ON mode ····· 05

[Processing after Operations]

1) Set data: 01 to page: 1, address: 00.
   (Release of protect)
2) Set data: 00 to page D, address; 02, and press the PAUSE button of the adjusting remote commander.
   (Release of the emergency prohibition mode)
3) Set data: 00 to page: D, address: 03, and press the PAUSE button of the adjusting remote commander.
   (Release of the sensor ineffective mode)
4) Set data: 00 to page: 1, address: 00.
   (Protect setting)
5) Disconnect the power supply of the unit.

2-2. TAPE PATH ADJUSTMENT

1. Preparations for adjustments

1) Clean the tape path face (tape guide, drum, capstan shaft, pinch roller).
2) Connect the adjusting remote commander to the remote terminal.
3) Turn on the HOLD switch of the adjusting remote commander.
4) Select page: 1, address: 00, and set data: 01.
   (Release of the protect)
5) Select page: D, address: 01, and set data: 03.
   (Set the track shift mode. The adjusting remote commander can be disconnected if its PAUSE button of remote commander is pressed. In this case, be sure to perform "Processing after operations" after completing adjustments.)
6) Connect the oscilloscope.
   Channel 1-Pin ③ of CN102 of VS board
   External trigger-Pin ④ of CN102 of VS board
   (Connect the oscilloscope via the measuring pin tool for the video section (J-6082-140-A).)
7) Playback the alignment tape (WR5-1NP) for tracking.
8) Check that the RF waveform of the oscilloscope is flat at both the entrance and the exit.
   If not flat, perform necessary adjustment according to the separate 8 mm Video Mechanical Adjustment Manual Ⅳ (A Mechanism).
9) Perform "Processing after operations", after completing adjustments.

CN102 of VS board

1	PB ´CH RF
2	PB PCM RF
3	PB RF
4	RF SWP
5	RP GND
6	REC 2

〔Processing after operations〕

1) Connect the adjusting remote commander, and turn on the HOLD switch.
2) Select page: 1, address: 00, and set data: 01.
3) Select page: D, address: 02, and set data: 00.
4) Press the PAUSE button of the adjusting remote commander.
5) Remove the power supply from the unit.

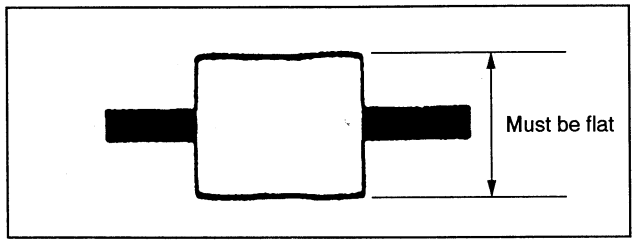

Fig. 7-2-1.

2-2. TAPE PATH ADJUSTMENT

1. Preparations for adjustments

1) Clean the tape path face (tape guide, drum, capstan shaft, pinch roller).
2) Connect the adjusting remote commander to the remote terminal.
3) Turn on the HOLD switch of the adjusting remote commander.
4) Select page: 1, address: 00, and set data: 01.
   (Release of the protect)
5) Select page: D, address: 01, and set data: 03.
   (Set the track shift mode. The adjusting remote commander can be disconnected if its PAUSE button of remote commander is pressed. In this case, be sure to perform "Processing after operations" after completing adjustments.)
6) Connect the oscilloscope.
   Channel 1-Pin ③ of CN102 of VS board
   External trigger-Pin ④ of CN102 of VS board
   (Connect the oscilloscope via the measuring pin tool for the video section (J-6082-140-A).)
7) Playback the alignment tape (WRS-1NP) for tracking.
8) Check that the RF waveform of the oscilloscope is flat at both the entrance and the exit.
   If not flat, perform necessary adjustment according to the separate 8 mm Video Mechanical Adjustment Manual IV (A Mechanism).
9) Perform "Processing after operations", after completing adjustments.

CN102 of VS board

1	PB CH RF
2	PB PCM RF
3	PB RF
4	RF SWP
5	RF GND
6	REC 2

[Processing after operations]

1) Connect the adjusting remote commander, and turn on the HOLD switch.
2) Select page: 1, address: 00, and set data: 01.
3) Select page: D, address: 02, and set data: 00.
4) Press the PAUSE button of the adjusting remote commander.
5) Remove the power supply from the unit.

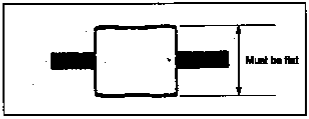

Fig. 7-2-1.

7-3. VIDEO SECTION ADJUSTMENTS

When performing adjustments, refer to the layout diagrams for adjustment related parts beginning from page 7–92.

3-1. PREPARATIONS BEFORE ADJUSTMENT

The following adjusting instruments are used for adjusting the video section.

3-1-1. Equipments to be Used

1) TV monitor
2) Oscilloscope: 2 phenomena, band 30 MHz or wider, with delay mode. (Use a 10:1 probe unless specified otherwise.)
3) Frequency counter
4) Pattern generator with video output terminal
5) Digital voltmeter
6) Audio generator
7) Audio level meter
8) Audio distortion meter
9) Audio attenuater
10) Regulated power supply
11) Alignment tape
    - For tracking adjustment (WR5-1NP)
      Part Code: 8-967-995-02
    - For Hi8 mode video frequency characteristics adjustment (WR5-7NE)
      Part Code: 8-967-995-13
    - For checking normal mode operations
      For SP (WR5-5NSP)
      Part Code: 8-967-995-42
      Or (WR5-4NSP)
      Part Code: 8-967-995-41
      For LP (WR5-4NL)
      Part Code: 8-967-995-51
      For checking AFM stereo operations (WR5-9NS)
      Part Code: 8-967-995-23
    - For checking Hi8 mode operations (ME tape)
      For SP (WR5-8NSE)
      Part Code: 8-967-995-43
      For LP (WR5-8NLE)
      Part Code: 8-967-995-52
12) remote commander for adjustment (J-6082-053-A)
13) VC board extension cord (42P, 0.8 mm)
    Part Code: J-6082-285-A
14) Control switch block (FK board) extension cord (9P, 0.8 mm)
    Part Code: J-6082-288-A
15) Control switch block (CK board) extension cord (18P, 0.8 mm)
    Part Code: J-6082-289-A
16) AU-165 board extension cord (34P, 0.8 mm) (CCD-TR72/TR80/TR400/TR430/TR750)
    Part Code: J-6082-286-A

3-1-2. Adjusting Precautions

1) The adjustment for this unit is performed using the VIDEO input (VIDEO terminal input) or the camera input. The camera input can be used for video adjustments only. Use the VIDEO input for the other adjustments.
   When using the VIDEO input, set the power supply switch to "PLAYER" or set the "forcible VTR power supply ON mode" using the adjusting remote commander. (Note 1).
   When using the camera input, set the power supply switch to "CAMERA" or set the "Forcible camera+VTR power supply ON mode" using the adjusting remote commander (Note 2).
   After completing adjustments, be sure to exit the "forcible VTR power supply ON mode" or "forcible camera+VTR power supply ON mode" (Note 3).
2) The F panel block (MA board) is not used for video adjustments. Disconnect the following connectors in these adjustments.
   1. CN1301 of the AU board
3) The view finder (VF board) is not used for video adjustments. Disconnect the following connector in these adjustments.
   1. CN206 of the VS board (4P, 0.5 mm)
4) The cabinet (R) (CK board: Power supply switch, camera function switch) need not be connected if the "forcible VTR power supply ON mode" or "forcible camera+VTR power supply ON mode" is set. In this case, disconnect the following connectors.
   1. CN503 of the VS board (18P, 0.8 mm)
   2. CN101 of the ZB board (4P, 0.8 mm)
   3. CN501 of the VS board (24P, 0.8 mm) (CCD-TR400/TR750)

   However, as disconnecting these connectors means disconnecting the 3V lithium power supply, data set by the user such as the date, time, and menu will be lost. After completing the adjustments, set these data again, and be sure to exit the "forcible VTR power supply ON mode" or "forcible camera+VTR power supply ON mode". (Note 3)
   When connecting the cabinet (R) using the extension cord, use the following type.
   1. J-6080-289-A (18P, 0.8 mm)

7-3. VIDEO SECTION ADJUSTMENTS

When performing adjustments, refer to the layout diagrams for adjustment related parts beginning from page 7-92.

3-1. PREPARATIONS BEFORE ADJUSTMENT

The following adjusting instruments are used for adjusting the video section.

3-1-1. Equipments to be Used

1) TV monitor
2) Oscilloscope: 2 phenomena, band 30 MHz or wider, with delay mode. (Use a 10:1 probe unless specified otherwise.)
3) Frequency counter
4) Pattern generator with video output terminal
5) Digital voltmeter
6) Audio generator
7) Audio level meter
8) Audio distortion meter
9) Audio attenuator
10) Regulated power supply
11) Alignment tape
   - For tracking adjustment (WR5-1NP)
     Part Code: 8-967-995-02
   - For Hi8 mode video frequency characteristics adjustment (WR5-7NE)
     Part Code: 8-967-995-13
   - For checking normal mode operations
     For SP (WR5-5NSP)
     Part Code: 8-967-995-42
     Or (WR5-4NSP)
     Part Code: 8-967-995-41
     For LP (WR5-4NL)
     Part Code: 8-967-995-51
     For checking AFM stereo operations (WR5-9NS)
     Part Code: 8-967-995-23
   - For checking HiB mode operations (ME tape)
     For SP (WR5-8NSE)
     Part Code: 8-967-995-43
     For LP (WR5-8NLE)
     Part Code: 8-967-995-52
12) remote commander for adjustment (J-6082-053-A)
13) VC board extension cord (42P, 0.8 mm)
    Part Code: J-6082-285-A
14) Control switch block (FK board) extension cord (9P, 0.8 mm)
    Part Code: J-6082-288-A
15) Control switch block (CK board) extension cord (18P, 0.8 mm)
    Part Code: J-6082-289-A
16) AU-165 board extension cord (34P, 0.8 mm) (CCD-TR72/TR80/TR400/TR430/TR750)
    Part Code: J-6082-286-A

3-1-2. Adjusting Precautions

1) The adjustment for this unit is performed using the VIDEO input (VIDEO terminal input), or the camera input. The camera input can be used for video adjustments only. Use the VIDEO input for the other adjustments.
   When using the VIDEO input, set the power supply switch to "PLAYER" or set the "forcible VTR power supply ON mode" using the adjusting remote commander. (Note 1).
   When using the camera input, set the power supply switch to "CAMERA" or set the "Forcible camera+VTR power supply ON mode" using the adjusting remote commander (Note 2).
   After completing adjustments, be sure to exit the "forcible VTR power supply ON mode" or "forcible camera+VTR power supply ON mode" (Note 3).
2) The F panel block (MA board) is not used for video adjustments. Disconnect the following connectors in these adjustments.
   1. CN1301 of the AU board
3) The view finder (VF board) is not used for video adjustments. Disconnect the following connector in these adjustments.
   1. CN206 of the VS board (4P, 0.5 mm)
4) The cabinet (R) (CK board: Power supply switch, camera function switch) need not be connected if the "forcible VTR power supply ON mode" or "forcible camera+VTR power supply ON mode" is set. In this case, disconnect the following connectors.
   1. CN503 of the VS board (18P, 0.8 mm)
   2. CN101 of the ZB board (4P, 0.8 mm)
   3. CN501 of the VS board (24P, 0.8 mm) (CCD-TR400/TR750)

   However, as disconnecting these connectors means disconnecting the 3V lithium power supply, data set by the user such as the date, time, and menu will be lost. After completing the adjustments, set these data again, and be sure to exit the "forcible VTR power supply ON mode" or "forcible camera+VTR power supply ON mode". (Note 3)
   When connecting the cabinet (R) using the extension cord, use the following type.
   1. J-6080-289-A (18P, 0.8 mm)

5) The lens block and VC board are not used for video adjustments. Disconnect the following connectors in these adjustments.
   1. CN203 of the VS board (42P, 0.8 mm)
   2. CN775 of the VC board (8P, 0.8 mm) (CCD-TR82/TR400/TR550/TR750)

   Connect the following when removing the VC board.
   1. Connect Pin ㉒ (REG H) and Pin ⑦ (D3.6V) of CN203 of the VS board with a jumper wire.

   When connecting the VC board using the extension cord, use the following type.
   1. J-6080-285-A (42P, 0.8 mm)
6) The audio board (AU board) is required only for audio adjustments. When not using it, disconnect the following connector.
   1. CN202 of the VS board

   When connecting the AU-165 board (CCD-TR72/TR80/TR400/TR430/TR750) using the extension cord, use the following type.
   1. J-6080-286-A (34P, 0.8 mm)
7) When opening the VS board, disconnect the following connectors.
   1. CN502 of the VS board (9P, 0.8 mm)

   The VTR function keys will not work. Use the remote commander to perform operations other than EJECT.
   When connecting the FK board and CN502 of VS board using the extension cord, use the following type.
   1. J-6080-288-A (9P, 0.8 mm)

Note 1: Setting the "forcible VTR power supply ON mode (VIDEO input mode)"
1) Set data: 01 to page: 1, address: 00. (Releasing the page D protect)
2) Set data: 02 to page: D, address: 03 and press the PAUSE button of the adjusting remote commander. (Setting the forcible VTR power supply ON mode)

By performing the above, the VTR can be operated with the cabinet (R) removed. After completing adjustments, be sure to exit the "forcible power supply ON mode".

Note 2: Setting the "forcible camera+VTR power supply ON mode (camera input mode)"
1) Set data: 01 to page: 1, address: 00. (Releasing the page D protect)
2) Set data: 03 to page: D, address: 03 and press the PAUSE button of the adjusting remote commander. (Setting the forcible camera+VTR power supply ON mode)

By performing the above, the VTR can be operated with the cabinet (R) removed. After completing adjustments, be sure to exit the "forcible power supply ON mode".

Note 3: Exiting the "forcible power supply ON mode"
1) Set data: 01 to page: 1, address: 00. (Releasing the page D protect)
2) Set data: 00 to page: D, address: 03 and press the PAUSE button of the adjusting remote commander. (Setting the forcible power supply ON mode)
3) Set data: 00 to page: 1, address: 00. (Setting the page D protect)

3-1-3. Connecting the Equipments

Connect the measuring instruments as shown in Fig. 7-3-1. according to the input terminal specifications (VIDEO input or CAMERA input), and perform the adjustments.
The input terminal is specified in the ( ) in the signal column. Either input terminal can be used when there are no specifications.

Note 1: If the VIDEO input is used for the adjustments which specify for the CAMERA input to be used, the product specifications of the unit may not be satisfied in some cases. Be sure to perform according to the specifications.

Note 2: When adjustments are performed with the S video output terminal VTR as the signal source, the efficiencies of the unit may be affected by VTR. It is recommendet that a pattern generator with a Y/C separation output terminal be used as much as possible.

5) The lens block and VC board are not used for video adjustments. Disconnect the following connectors in these adjustments.
   1. CN203 of the VS board (42P, 0.8 mm)
   2. CN775 of the VC board (8P, 0.8 mm)
      (CCD-TR82/TR400/TR550/TR750)

   Connect the following when removing the VC board.
   1. Connect Pin ⑧ (REC H) and Pin ⑦ (D3.6V) of CN203 of the VS board with a jumper wire.

   When connecting the VC board using the extension cord, use the following type.
   1. J-6080-285-A (42P, 0.8 mm)

6) The audio board (AU board) is required only for audio adjustments. When not using it, disconnect the following connector.
   1. CN202 of the VS board

   When connecting the AU-165 board (CCD-TR72/TR80/TR400/TR430/TR750) using the extension cord, use the following type.
   1. J-6080-286-A (34P, 0.8 mm)

7) When opening the VS board, disconnect the following connectors.
   1. CN502 of the VS board (9P, 0.8 mm)

   The VTR function keys will not work. Use the remote commander to perform operations other than EJECT.
   When connecting the FK board and CN502 of VS board using the extension cord, use the following type.
   1. J-6080-288-A (9P, 0.8 mm)

Note 1: Setting the "forcible VTR power supply ON mode (VIDEO input mode)"
1) Set data: 01 to page: 1, address: 00.
   (Releasing the page D protect)
2) Set data: 02 to page: D, address: 03 and press the PAUSE button of the adjusting remote commander.
   (Setting the forcible VTR power supply ON mode)

By performing the above, the VTR can be operated with the cabinet (R) removed. After completing adjustments, be sure to exit the "forcible power supply ON mode".

Note 2: Setting the "forcible camera+VTR power supply ON mode (camera input mode)"
1) Set data: 01 to page: 1, address: 00.
   (Releasing the page D protect)
2) Set data: 03 to page: D, address: 03 and press the PAUSE button of the adjusting remote commander.
   (Setting the forcible camera+VTR power supply ON mode)

By performing the above, the VTR can be operated with the cabinet (R) removed. After completing adjustments, be sure to exit the "forcible power supply ON mode".

Note 3: Exiting the "forcible power supply ON mode"
1) Set data: 01 to page: 1, address: 00.
   (Releasing the page D protect)
2) Set data: 00 to page: D, address: 03 and press the PAUSE button of the adjusting remote commander.
   (Setting the forcible power supply ON mode)
3) Set data: 00 to page: 1, address: 00.
   (Setting the page D protect)

3-1-3. Connecting the Equipments

Connect the measuring instruments as shown in Fig. 7-3-1. according to the input terminal specifications (VIDEO input or CAMERA input), and perform the adjustments.
The input terminal is specified in the ( ) in the signal column. Either input terminal can be used when there are no specifications.

Note 1: If the VIDEO input is used for the adjustments which specify for the CAMERA input to be used, the product specifications of the unit may not be satisfied in some cases. Be sure to perform according to the specifications.

Note 2: When adjustments are performed with the S video output terminal VTR as the signal source, the efficiencies of the unit may be affected by VTR. It is recommendet that a pattern generator with a Y/C separation output terminal be used as much as possible.

Connecting the TV monitor and regulated power supply

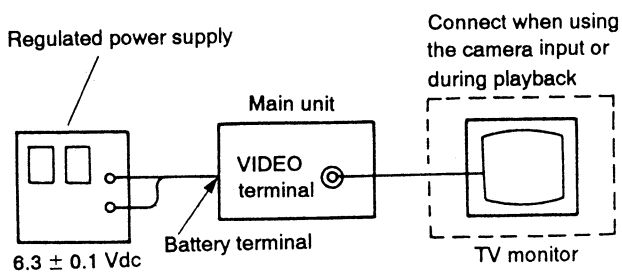

Connecting the pattern generator

[VIDEO Input]
Set the power supply switch to "PLAYER" or set the "forcible VTR power supply ON mode" using the adjusting remote commander.

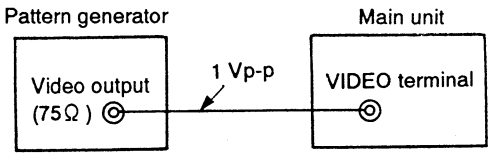

Note: The TV monitor cannot be connected.
Use the view finder to monitor.

[CAMERA Input]
Set the power supply switch to "CAMERA" or set the "forcible camera+VTR power supply ON mode" using the adjusting remote commander.

- When the pattern generator has a Y/C separation output terminal

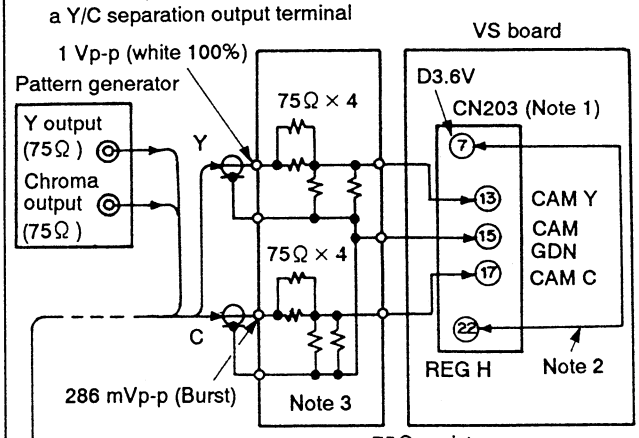

- When the pattern generator has no Y/C separation output terminal

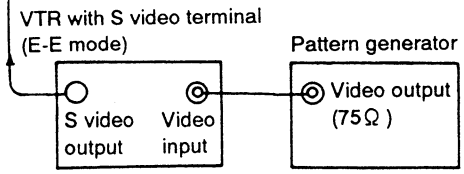

Note 1: Remove the VC board.
Note 2: Connect Pins ⑦ and ㉒ of CN203 with the jumper wire.
Note 3: The chroma signal input is not required for some adjustments.

Fig. 7-3-1.

3-1-4. How to Set the REC Mode in the Model with out REC switch

1) REC key forbidden accept mode cancel
   1. Connect the adjusting remote commander to the remote terminal.
   2. Turn on the power.
   3. Turn on the HOLD switch of the adjusting remote commander.
   4. Select the page: 1 address: 00, and set the data to 01. (Protect mode cancel)
   5. Select the page: D address: 17, and set the data to 12 [13].[Note 1] (REC key forbidden accept mode cancel)
   6. Press PAUSE button on the adjusting remote commander. (Write to the non-volatile memory)

The REC key is accepted through the above procedure.

2) REC mode setting
   1. Turn off the HOLD switch of the adjusting remote command-er.
   2. Press REC buttons of the adjusting remote commander.
   3. Perform "3. Procedure after completed the adjustment", after completing adjustment.

3) Procedure after completed the adjustment
   Be sure to return the mode to REC key forbidden accept mode after adjustment.
   1. Connect the adjusting remoter controller.
   2. Turn on the power.
   3. Turn on HOLD switch of the adjusting remote commander.
   4. Select the page: 1 address: 00, and set the data to 01. (Protect mode cancel)
   5. Select the page: D address: 17, and set the data to 02 [03].[Note 1] (Setting of the REC key forbidden accept mode)
   6. Press PAUSE button on the adjusting remote commander. (Write to the non-volatile memory)
   7. Turn off the power.

Note 1: No mark : CCD-TR42/TR70/TR72/TR80/TR82
[ ] : CCD-TR430/TR550

Connecting the TV monitor and regulated power supply

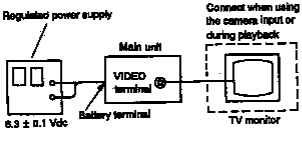

Connecting the pattern generator

[VIDEO input]
Set the power supply switch to "PLAYER" or set the "forcible VTR power supply ON mode" using the adjusting remote commander.

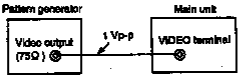

Note: The TV monitor cannot be connected. Use the view finder to monitor.

[CAMERA input]
Set the power supply switch to "CAMERA" or set the "forcible camera+VTR power supply ON mode" using the adjusting remote commander.

- When the pattern generator has a Y/C separation output terminal

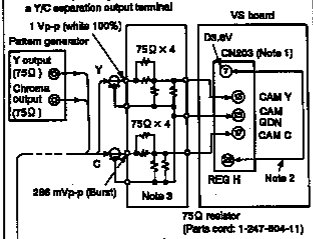

- When the pattern generator has no Y/C separation output terminal

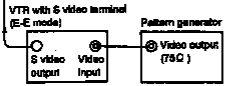

Note 1: Remove the VC board.
Note 2: Connect Pins ⑦ and ⑧ of CN203 with the jumper wire.
Note 3: The chrome signal input is not required for some adjustments.

Fig. 7-3-1.

3-1-4. How to Set the REC Mode in the Model with out REC switch

1) REC key forbidden accept mode cancel
   1. Connect the adjusting remote commander to the remote terminal.
   2. Turn on the power.
   3. Turn on the HOLD switch of the adjusting remote commander.
   4. Select the page: 1 address: 00, and set the data to 01. (Protect mode cancel)
   5. Select the page: D address: 17, and set the data to 12 [13].Note1 (REC key forbidden accept mode cancel)
   6. Press PAUSE button on the adjusting remote commander. (Write to the non-volatile memory)

The REC key is accepted through the above procedure.

2) REC mode setting
   1. Turn off the HOLD switch of the adjusting remote command-er.
   2. Press REC buttons of the adjusting remote commander.
   3. Perform "3. Procedure after completed the adjustment", after completing adjustment.

3) Procedure after completed the adjustment:
   Be sure to return the mode to REC key forbidden accept mode after adjustment.
   1. Connect the adjusting remoter controller.
   2. Turn on the power.
   3. Turn on HOLD switch of the adjusting remote commander.
   4. Select the page: 1 address: 00, and set the data to 01. (Protect mode cancel)
   5. Select the page: D address: 17, and set the data to 02 [03].Note1 (Setting of the REC key forbidden accept mode)
   6. Press PAUSE button on the adjusting remote commander. (Write to the non-volatile memory)
   7. Turn off the power.

Note 1: Na mark : CCD-TR42/TR70/TR72/TR80/TR82
[ ] : CCD-TR430/TR550

3-1-5. Checking the Input Signals

Because the video signal obtained from the pattern generator is used as the adjustment signal for adjusting the VTR section, the video output signal must satisfy the given specifications.

1. CAMERA input

Connect the oscilloscope to Pin ⑬ of CN203 on VS board, and check that the sync signal of the Y signal is approximately 0.143 Vp-p and that the amplitude of the video section is approximately 0.357 Vp-p. (When a VTR with the S VIDEO output terminal is used, also check that the chroma signal and burst signal have not remained.) Connect the oscilloscope to Pin ⑰ of CN203 on VS board, and check that the burst signal amplitude of the chroma signal is approximately 0.143 Vp-p and flat, and that the amplitude ratio of the burst signal to the chroma signal is 0.30:0.66. The Y and chroma signals used in the adjustment are shown in Fig. 7-3-2.

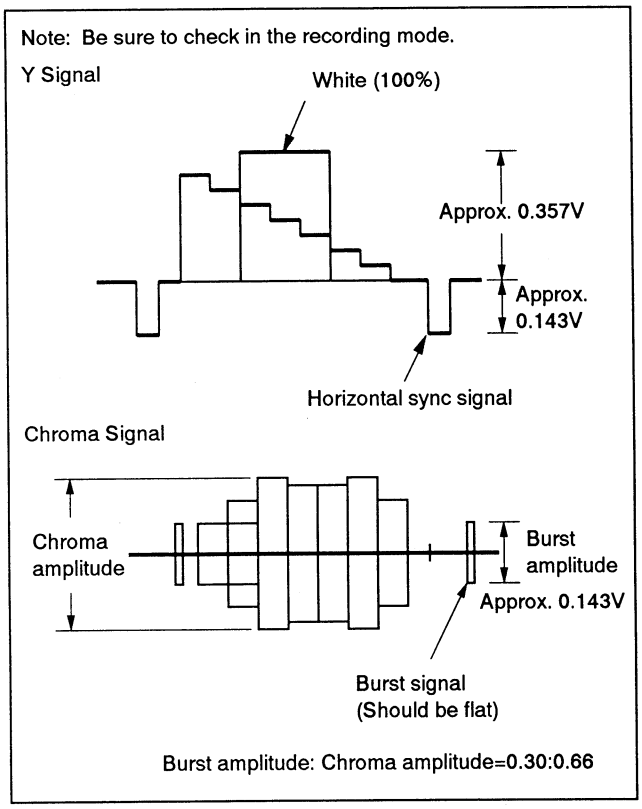

Fig. 7-3-2. Color bar signal of pattern generator

2. VIDEO input

Connect the oscilloscope to the video input/output terminal, and check that the sync signal amplitude of the video signal is approximately 0.286V, the amplitude of the video section is approximately 0.714V, the amplitude of the burst signal is approximately 0.286V and flat, and that the level ratio of the burst signal to the "red" signal is 0.30:0.66.

The video signal (color bar) used for adjusting the VTR section is shown in Fig. 7-3-3.

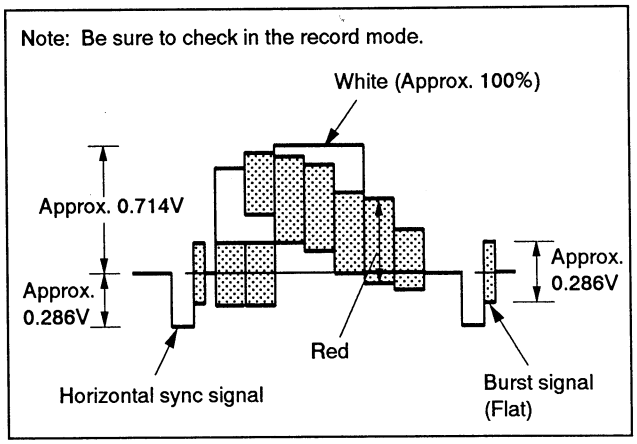

Fig. 7-3-3. Color Bar Signal of Pattern Generator

3-1-5. Checking the Input Signals

Because the video signal obtained from the pattern generator is used as the adjustment signal for adjusting the VTR section, the video output signal must satisfy the given specifications.

1. CAMERA Input

Connect the oscilloscope to Pin Ⓑ of CN203 on VS board, and check that the sync signal of the Y signal is approximately 0.143 Vp-p and that the amplitude of the video section is approximately 0.357 Vp-p. (When a VTR with the S VIDEO output terminal is used, also check that the chroma signal and burst signal have not remained.) Connect the oscilloscope to Pin Ⓑ of CN203 on VS board, and check that the burst signal amplitude of the chroma signal is approximately 0.143 Vp-p and flat, and that the amplitude ratio of the burst signal to the chroma signal is 0.30:0.66. The Y and chroma signals used in the adjustment are shown in Fig. 7-3-2.

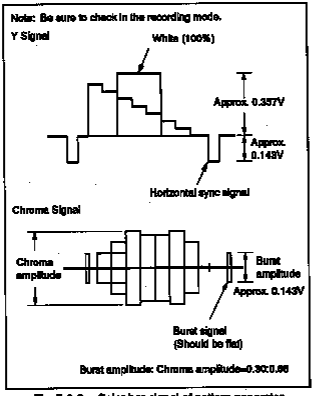

Fig. 7-3-2. Color bar signal of pattern generator

2. VIDEO Input

Connect the oscilloscope to the video input/output terminal, and check that the sync signal amplitude of the video signal is approximately 0.286V, the amplitude of the video section is approximately 0.714V, the amplitude of the burst signal is approximately 0.286V and flat, and that the level ratio of the burst signal to the "red" signal is 0.30:0.66.

The video signal (color bar) used for adjusting the VTR section is shown in Fig. 7-3-3.

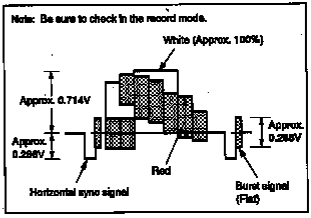

Fig. 7-3-3. Color Bar Signal of Pattern Generator

3-1-6. Alignment Tape

The following table lists alignment tapes which are available.
Use the tape specified in the signal column for each adjustment.

If the type of tape to be used for checking operations is not specified, use whichever type.

Name	Recording mode	Tape type	Tape speed	Recording contents: Video area	Recording contents: PCM area	Usage
Tracking WR5-1NP	L	MP	SP	CH2: Signal for 1 MHz tape path adjustment		Tape path adjustment Switching position adjustment
Video frequency characteristics WR5-7NE	E	ME	SP	RF sweep 0 to 15 MHz Marker 2, 4.5, 7, 8.5, 10 MHz		Frequency characteristics adjustment
Video frequency characteristics WR5-2N	L	MP	SP	RF sweep Marker 1, 3.58, 5.5, 7 MHz		
Operation check (SP mode) WR5-5NSP	L	MP	SP	• Video signal Color bar 4 minutes Monoscope 4 minutes • Audio signal (AFM) 400 Hz 60% modulation	• Audio signal (PCM) Monoscope section 20 Hz 20 sec. 400 Hz 20 sec. 14 kHz 20 sec. Repeated 4 times Color bar section 1 kHz 4 minutes	Checking operations
Operation check WR5-8NSE	E	ME	SP		• Audio signal (PCM) 400 Hz	
Operation check WR5-4NL	L	MP	LP	• Video signal Color bar 4 minutes Monoscope 4 minutes • Audio signal (AFM) 400 Hz 60% modulation		
Operation check WR5-8NLE	E	ME	LP		• Audio signal (PCM) 400 Hz	
AFM stereo Operation check WR5-9NS	L	MP	SP	• Video signal Color bar 4 minutes Monoscope 4 minutes • Audio signal (AFM) Stereo section (color bar) Lch: 400 Hz, Rch: 1 kHz (L+R: 1.5 MHz ± 60 kHz DEV L–R: 1.7 MHz ± 30 kHz DEV) Bilingual section (Monoscope) MAIN: 400 Hz (1.5 MHz ± 60 kHz DEV) SUB: 1 kHz (1.7 MHz ± 30 kHz DEV)	• Audio signal (PCM) 400 Hz 8 minutes	AFM stereo Checking operations

Note: Recording mode
L ····· Normal (Original) mode
E ····· hi8 (hi band) mode

Tape type
MP ····· Particle type metal tape
ME ····· Evaporated type metal type

Table 7-3-1.

3-1-6. Alignment Tape

The following table lists alignment tapes which are available.
Use the tape specified in the signal column for each adjustment.

If the type of tape to be used for checking operations is not specified, use whichever type.

Name	Recording mode	Tape type	Tape speed	Recording contents: Video area	Recording contents: PCM area	Usage
Tracking WR5-1NP	L	MP	SP	CH2: Signal for 1 MHz tape path adjustment		Tape path adjustment Switching position adjustment
Video frequency characteristics WR5-7NE	E	ME	SP	RF sweep 0 to 15 MHz Marker 2, 4.5, 7, 8.5, 10 MHz		Frequency characteristics adjustment
Video frequency characteristics WR5-2N	L	MP	SP	RF sweep Marker 1, 3.58, 5.5, 7 MHz		
Operation check (SP mode) WR5-5NSP	L	MP	SP	• Video signal Color bar 4 minutes Monoscope 4 minutes • Audio signal (AFM) 400 Hz 60% modulation	• Audio signal (PCM) Monoscope section 20 Hz 20 sec. 400 Hz 20 sec. 14 kHz 20 sec. Repeated 4 times Color bar section 1 kHz 4 minutes	Checking operations
Operation check WR5-8NSE	E	ME	SP		• Audio signal (PCM) 400 Hz	
Operation check WR5-4NL	L	MP	LP	• Video signal Color bar 4 minutes Monoscope 4 minutes • Audio signal (AFM) 400 Hz 60% modulation		
Operation check WR5-8NLE	E	ME	LP		• Audio signal (PCM) 400 Hz	
AFM stereo Operation check WR5-9NS	L	MP	SP	• Video signal Color bar 4 minutes Monoscope 4 minutes • Audio signal (AFM) Stereo section (color bar) Left: 400 Hz, Right: 1 kHz L+R: 1.5 MHz ± 60 kHz DEV L−R: 1.7 MHz ± 30 kHz DEV Bilingual section (Monoscope) MAIN: 400 Hz (1.5 MHz ± 60 kHz DEV) SUB: 1 kHz (1.7 MHz ± 30 kHz DEV)	• Audio signal (PCM) 400 Hz 8 minutes	AFM stereo Checking operations

Note: Recording mode
L ····· Normal (Original) mode
E ····· hi8 (hi band) mode

Tape type
MP ····· Particle type metal tape
ME ····· Evaporated type metal type

Table 7-3-1.

Fig. 7-3-4. shows the 75% color bar signals recorded on the alignment tape.

Note: Measure using the video output terminal (Terminated at 75 Ω)

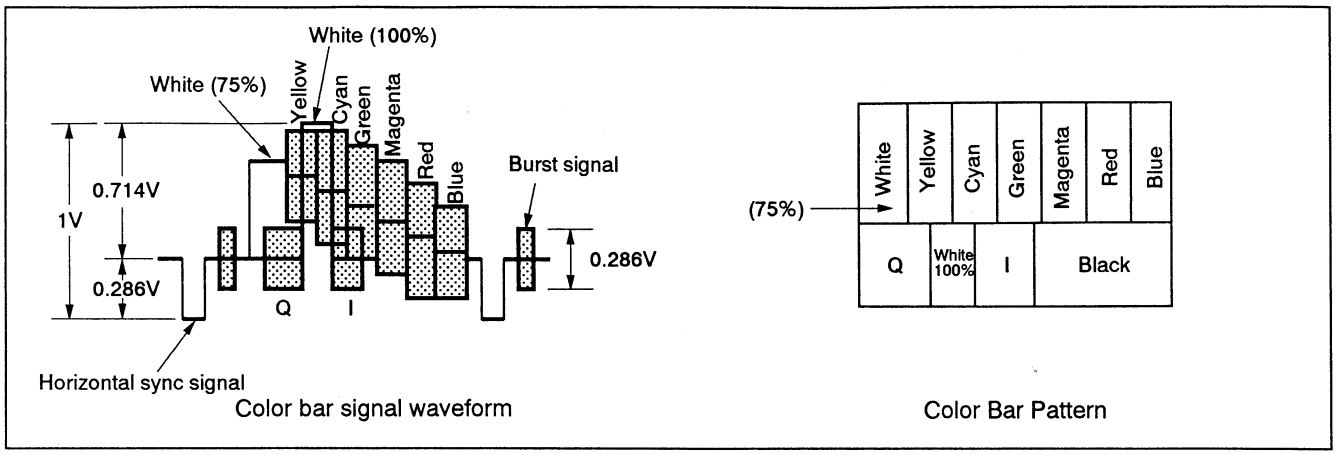

Fig. 7-3-4. Color Bar Signals of the Alignment Tape

3-1-7. Input/Output Level and Impedance

1. CCD-TR42/TR70/TR72/TR80/TR82/TR430/TR550

Video output	Phono jack, 1 Vp-p, 75Ω , unbalanced, sync negative
Audio output	Phono jack, –7.5 dBs, (at load impedance 47 kΩ) impedance less than 2.2 kΩ

2. CCD-TR400/TR750

S video input/output	4-pin mini DIN, Luminance signal: 1 Vp-p, 75 ohms, unbalanced, sync negative Chrominance signal: 0.286 Vp-p, 75 ohms, unbalanced
Video input/output	Phono jack, 1 Vp-p, 75 ohms, unbalanced, sync negative
Audio input/output	Phono jack, Input: –7.5 dBs, input impedance more than 47 kilohms Output: –7.5 dBs, (at load impedance 47 kilohms), impedance less than 2.2 kilohms

Fig. 7-3-4. shows the 75% color bar signals recorded on the alignment tape.

Note: Measure using the video output terminal (Terminated at 75 Ω)

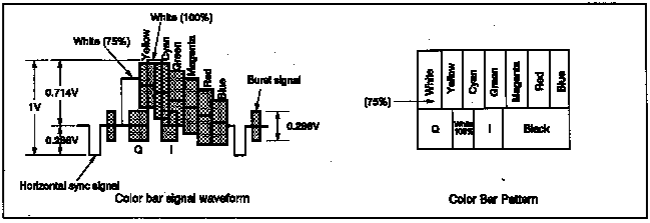

Fig. 7-3-4. Color Bar Signals of the Alignment Tape

3-1-7. Input/Output Level and Impedance

1. CCD-TR42/TR70/TR72/TR80/TR82/TR430/TR550

Video output	Phono jack, 1 Vp-p, 75Ω , unbalanced, sync negative
Audio output	Phono jack, –7.5 dBs, (at load impedance 47 kΩ) impedance less than 2.2 kΩ

2. CCD-TR400/TR750

S video input/output	4-pin mini DIN, Luminance signal: 1 Vp-p, 75 ohms, unbalanced, sync negative Chrominance signal: 0.286 Vp-p, 75 ohms, unbalanced
Video input/output	Phono jack, 1 Vp-p, 75 ohms, unbalanced, sync negative
Audio input/output	Phono jack, Input: –7.5 dBs, input impedance more than 47 kilohms Output: –7.5 dBs, (at load impedance 47 kilohms), impedance less than 2.2 kilohms

3-1-8. Service Mode

1. Setting the service mode

The service mode consists of the adjustment mode which adjusts the EVR and the test mode which shows the condition of the unit.
The unit can be set into the test mode and adjustment mode by connecting the adjusting remote commander (Set the HOLD switch to "HOLD").

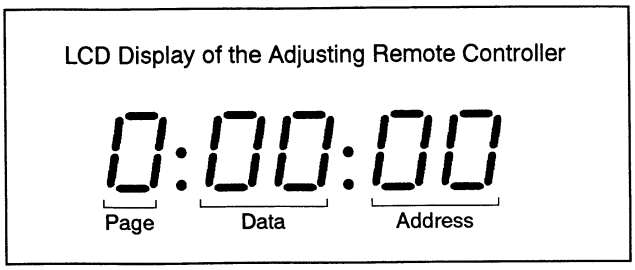

(1) Service LANC memory map

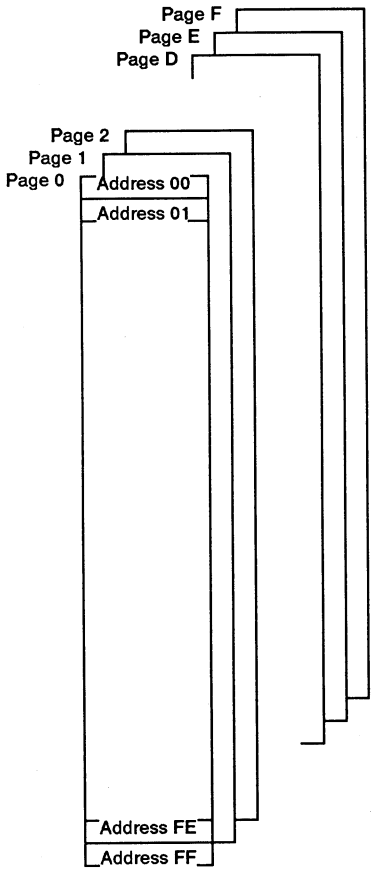

Adjusting remote commander RM-95 (J-6082-053-A)

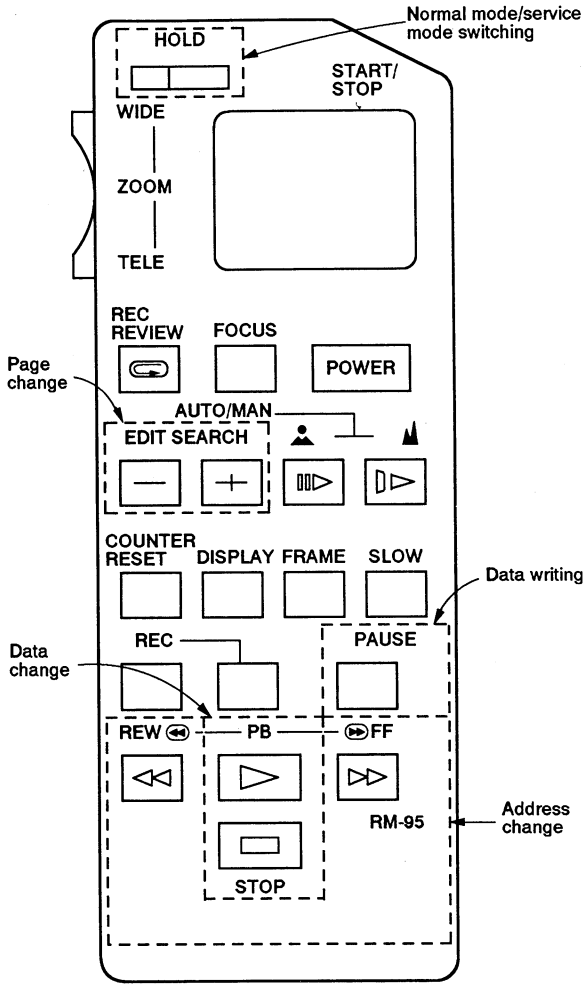

Page	Page Layout
0	
1	D page write protect setting/release
2	Mode controller RAM, I/O
3	Mechanism controller RAM, I/O
4	
5	
6	Shared by camera section
7	Camera controller RAM, I/O
8	
9	
A	2 bytes data display
B	
C	
D	VTR EEPROM (Note 1)
E	
F	Camera EEPROM (Note 2)

Note 1: The data of this page is written in the EEPROM (IC501 of VS board).
Note 2: The data of this page is written in the EEPROM (IC601 of VC board).

3-1-8. Service Mode

1. Setting the service mode

The service mode consists of the adjustment mode which adjusts the EVR and the test mode which shows the condition of the unit.

The unit can be set into the test mode and adjustment mode by connecting the adjusting remote commander (Set the HOLD switch to "HOLD").

LCD Display of the Adjusting Remote Controller

0:00:00

Page Data Address

(1) Service LANC memory map

Adjusting remote commander RM-95 (J-6082-053-A)

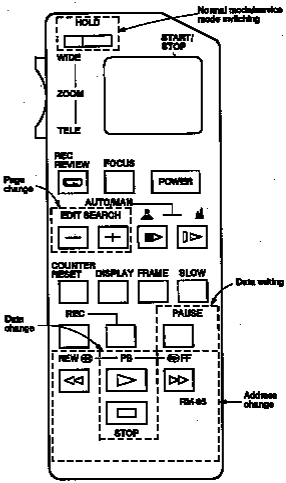

Page	Page Layout
0	
1	D page write protect setting/release
2	Mode controller RAM, I/O
3	Mechanism controller RAM, I/O
4	
5	
6	Shared by camera section
7	Camera controller RAM, I/O
8	
9	
A	2 bytes data display
B	
C	
D	VTR EEPROM (Note 1)
E	
F	Camera EEPROM (Note 2)

Note 1: The data of this page is written in the EEPROM (IC501 of VS board).

Note 2: The data of this page is written in the EEPROM (IC601 of VC board).

(2) Category codes

This unit uses category codes for pages 2 and 3.

(Example)

Specification of	Page 2	Category 01	Address 47

Page 2 is the mode controller

Page 3 is the mechanism controller

The actual category and address are specified by the adjusting remote commander as follows.

Order	Page	Address	Data	Procedure
1	2	00	01	Select category 01 using the data of page 2, address 00. From here onwards, category 01 will be selected at page 2 until the data of page 2, address 01 is rewritten.
2	2	47		As the data of page 2, address 00 is 01, select page 2, address 47 to select page 2, category 01, address 47. (The data of this address is the battery voltage A/D conversion value of the mode controller input.)

[Shifting to the service mode using the adjusting remote commander]

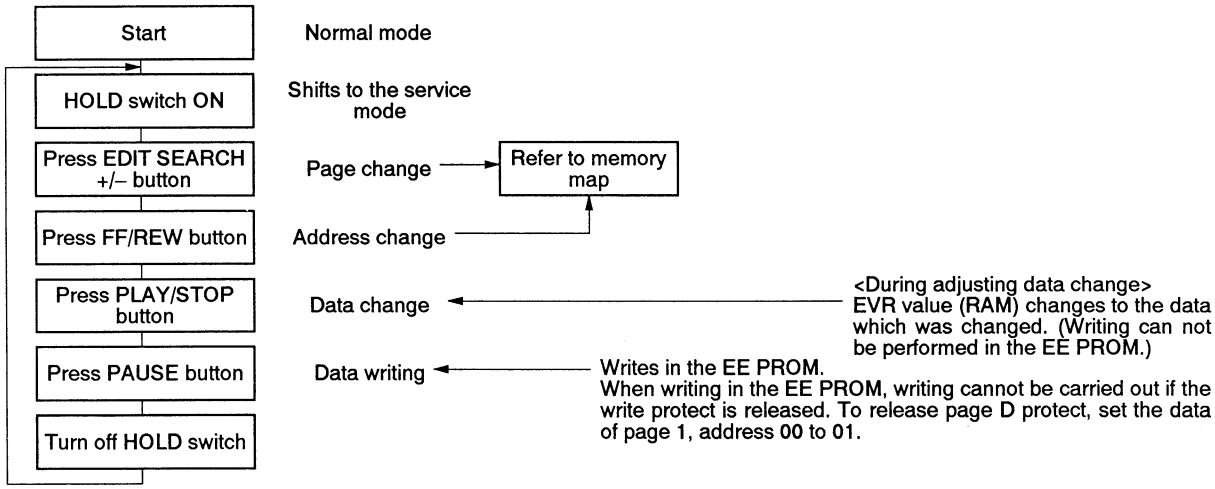

Command Name	Command Function	Normal LANC Command
Page Up	Page+1	Edit Search+
Page Down	Page–1	Edit Search –
Direct Page Set	Sets to the specified page	Event Clear
Address Up	Address+1	Fast Forward
Address Down	Address–1	Rewind
Data Up	Data+1	Play Back
Data Down	Data–1	Stop
Store	Writes data in the EEPROM, RAM	Pause

(3) Additional note on adjustment

After the completion of the all adjustments, cancell the adjustment mode by either of the following ways.

1) Unplug the main power supply and remove the lithium battery. (In this case, date and time and menu setting have been set by users are canceled. Perform resetting.)
2) Return data of the address: 00 on page: 1 to 00. And when data on page: 2 is changed, return the data to the original condition.

(2) Category codes
This unit uses category codes for pages 2 and 3.
(Example)

Specification of	Page 2	Category 01	Address 47

Page 2 is the mode controller

Page 3 is the mechanism controller

The actual category and address are specified by the adjusting remote commander as follows.

Order	Page	Address	Data	Procedure
1	2	00	01	Select category 01 using the data of page 2, address 00. From here onwards, category 01 will be selected at page 2 until the data of page 2, address 01 is rewritten.
2	2	47		As the data of page 2, address 00 is 01, select page 2, address 47 to select page 2, category 01, address 47. (The data of this address is the battery voltage A/D conversion value of the mode controller input.)

[Shifting to the service mode using the adjusting remote commander]

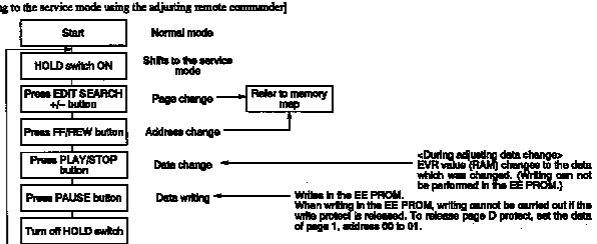

Command Name	Command Function	Normal LANC Command
Page Up	Page+1	Edit Search+
Page Down	Page–1	Edit Search –
Direct Page Set	Sets to the specified page	Event Clear
Address Up	Address+1	Fast Forward
Address Down	Address–1	Rewind
Data Up	Data+1	Play Back
Data Down	Data–1	Stop
Store	Writes data in the EEPROM, RAM	Pause

(3) Additional note on adjustment
After the completion of the all adjustments, cancell the adjustment mode by either of the following ways.

1) Unplug the main power supply and remove the lithium battery. (In this case, date and time and menu setting have been set by users are canceled. Perform resetting.)
2) Return data of the address: 00 on page: 1 to 00. And when data on page: 2 is changed, return the data to the original condition.

2. Page D write protect

Release/set the page D write protect.

Page 1	Address 00

Data	Function
00	Normal (Write protect condition)
01	Release the write protect

3. Test mode setting

Set/release each test mode. Release the protect (Page: 1, Address: 00, Data: 01) before setting the data.

Page D	Address 02

Data	Function
00	Normal
01	Test mode 1 Various emergency prohibitions and releases Drum, capstan, loading motor, reel, tape top and end, DEW SP/LP automatic discrimination prohibition, manual switching, 5 minutes pause release prohibition Power off prohibition/release by battery end
02	Test mode 2 Not used
03	Test mode 3 Track shift Performs the track shift playback Rear lock distinction prohibition during PB SP/LP automatic discrimination prohibition, manual switching
04	Test mode 4 Rear lock mode Performs rear lock playback SP/LP automatic discrimination prohibition, manual switching

※ For page D, the data set will be recorded in the nonvolatile memory by pressing the PAUSE button on the adjusting remote commander. Take note that, in this case, the test mode will not be released even if the main power has been turned off (6.3 Vdc).

※ Be sure to return this address data to 00 after completing adjustments/repairs and press the PAUSE button of the adjusting remote commander.

4. Emergency code

Fault (error) symptoms can be checked.

Page D	Address E4

Last emergency code

·····Last error code generated (This data will be renewed each time an error occurs.)

Page D	Address E8

2nd emergency code

·····2nd error code generated

Page D	Address EC

First emergency code

·····First error code generated

※ Be sure to rewrite the data of addresses E4, E8 and EC to 00 after repairs/adjustments.

※ When rewriting the data, be sure to press the PAUSE button of the remote commander after setting the data.

Code	Error Condition
00	No error
01	Loading motor error
02	Reel error during unloading
03	Reel errors at other times
04	Capstan error
05	FG error during drum start up
06	PG error during drum start up
07	FG error during normal drum conditions
08	PG error during normal drum conditions
09	Phase error during normal drum conditions

2. Page D write protect

Release/set the page D write protect.

Page 1	Address 00

Data	Function
00	Normal (Write protect condition)
01	Release the write protect

3. Test mode setting

Set/release each test mode. Release the protect (Page: 1, Address: 00, Data: 01) before setting the data.

Page D	Address 02

Data	Function
00	Normal
01	Test mode 1 Various emergency prohibitions and releases Drum, capstan, loading motor, reel, tape top and end, DEW SP/LP automatic discrimination prohibition, manual switching, 5 minutes pause release prohibition Power off prohibition/release by battery end
02	Test mode 2 Not used
03	Test mode 3 Track shift Performs the track shift playback Rear lock distinction prohibition during PB SP/LP automatic discrimination prohibition, manual switching
04	Test mode 4 Rear lock mode Performs rear lock playback SP/LP automatic discrimination prohibition, manual switching

※ For page D, the data set will be recorded in the nonvolatile memory by pressing the PAUSE button on the adjusting remote commander. Take note that, in this case, the test mode will not be released even if the main power has been turned off (6.3 Vdc).

※ Be sure to return this address data to 00 after completing adjustments/repairs and press the PAUSE button of the adjusting remote commander.

4. Emergency code

Fault (error) symptoms can be checked.

Page D	Address E4

Last emergency code
·····Last error code generated (This data will be renewed each time an error occurs.)

Page D	Address EB

2nd emergency code
·····2nd error code generated

Page D	Address EC

First emergency code
·····First error code generated

※ Be sure to rewrite the data of addresses E4, EB and EC to 00 after repairs/adjustments.

※ When rewriting the data, be sure to press the PAUSE button of the remote commander after setting the data.

Code	Error Condition
00	No error
01	Loading motor error
02	Reel error during unloading
03	Reel errors at other times
04	Capstan error
05	FG error during drum start up
06	PG error during drum start up
07	FG error during normal drum conditions
08	PG error during normal drum conditions
09	Phase error during normal drum conditions

5. Emergency mode

The operation mode can be checked during faults.

Page D	Address E5

Last emergency mode
·····The operation mode when the last error is generated
(This data will be renewed each time an error occurs.)

Page D	Address E9

2nd emergency mode
·····The operation mode when the 2nd error is generated

Page D	Address ED

First emergency mode
·····The operation mode when the first error is generated

※ Be sure to rewrite the data of addresses E5, E9 and ED to 00 after repairs/adjustments.
※ When rewriting the data, be sure to press the PAUSE button of the adjusting remote commander after setting the data.

Code	Error Conditions
00	BEFOR INITIALIZE
01	EJECTED
02	NORMAL STOP
03	FF
04	NORMAL REC
06	NORMAL PB
07	PB PAUSE
12	LOADING
14	REC PAUSE
26	X1
27	1/5 SLOW
31	UNLOADING
46	CUE
56	REVIEW
62	STOP TAPE END
66	X2
67	FRAME
72	STOP TAPE TOP
83	REWIND
85	REC REVIEW (+)
95	REC REVIEW (–)
97	–PB PAUSE
A2	EMERGENCY LOADING
A5	EDIT SEARCH (+)
B1	EMERGENCY UNLOADING
B2	STOP EMERGENCY 1
B5	EDIT SEARCH (–)
C2	STOP EMERGENCY 2
E2	STOP NO CASSETTE
F5	EDIT PAUSE

6. Bit value discrimination

Bit values must be discriminated using the display data of the adjusting remote commander for the following items. Use the table below to discriminate if the bit value is "1" or "0".

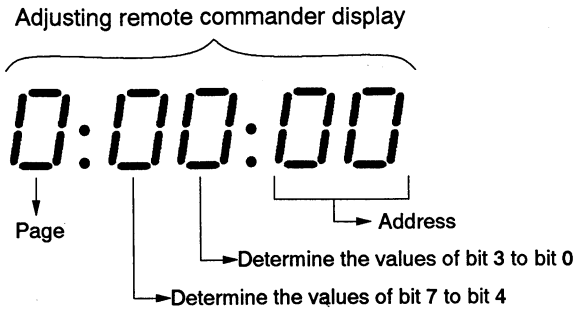

	Remote controller display	Bit value			
		bit 3 or bit 7	bit 2 or bit 6	bit 1 or bit 5	bit 0 or bit 4
	0	0	0	0	0
	1	0	0	0	1
	2	0	0	1	0
	3	0	0	1	1
	4	0	1	0	0
	5	0	1	0	1
	6	0	1	1	0
	7	0	1	1	1
Ⓐ→	8	1	0	0	0
	9	1	0	0	1
	A(A)	1	0	1	0
	B(b)	1	0	1	1
	C(c)	1	1	0	0
	D(d)	1	1	0	1
Ⓑ→	E(E)	1	1	1	0
	F(F)	1	1	1	1

(Example) If the remote commander display data is "8E", bit values from bit7 to bit4 can be discriminated from column Ⓐ, and those from bit3 to bit0 from column Ⓑ.

5. Emergency mode

The operation mode can be checked during faults.

Page D	Address E5

Last emergency mode

·····The operation mode when the last error is generated
(This data will be renewed each time an error occurs.)

Page D	Address E9

2nd emergency mode

·····The operation mode when the 2nd error is generated

Page D	Address ED

First emergency mode

·····The operation mode when the first error is generated

※ Be sure to rewrite the data of addresses E5, E9 and ED to 00 after repairs/adjustments.

※ When rewriting the data, be sure to press the PAUSE button of the adjusting remote commander after setting the data.

Code	Error Conditions
00	BEFOR INITIALIZE
01	EJECTED
02	NORMAL STOP
03	FF
04	NORMAL REC
06	NORMAL PB
07	PB PAUSE
12	LOADING
14	REC PAUSE
26	X1
27	1/9 SLOW
31	UNLOADING
46	CUE
56	REVIEW
62	STOP TAPE END
66	X2
67	FRAME
72	STOP TAPE TOP
83	REWIND
85	REC REVIEW (+)
95	REC REVIEW (–)
97	–PB PAUSE
A2	EMERGENCY LOADING
A5	EDIT SEARCH (+)
B1	EMERGENCY UNLOADING
B2	STOP EMERGENCY 1
B5	EDIT SEARCH (–)
C2	STOP EMERGENCY 2
E2	STOP NO CASSETTE
F3	EDIT PAUSE

6. Bit value discrimination

Bit values must be discriminated using the display data of the adjusting remote commander for the following items. Use the table below to discriminate if the bit value is "1" or "0".

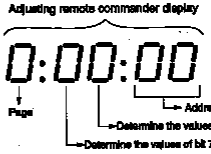

	Remote controller display	Bit value			
		bit 3 or bit 7	bit 2 or bit 6	bit 1 or bit 5	bit 0 or bit 4
	0	0	0	0	0
	1	0	0	0	1
	2	0	0	1	0
	3	0	0	1	1
	4	0	1	0	0
	5	0	1	0	1
	6	0	1	1	0
	7	0	1	1	1
Ⓐ→	8	1	0	0	0
	9	1	0	0	1
	A(A)	1	0	1	0
	B(b)	1	0	1	1
	C(c)	1	1	0	0
	D(d)	1	1	0	1
Ⓑ→	E(E)	1	1	1	0
	F(F)	1	1	1	1

(Example) If the remote commander display data is "8E", bit values from bit7 to bit4 can be discriminated from column Ⓐ, and those from bit3 to bit0 from column Ⓑ.

7. Battery voltage check

Page 2	Category 01	Address 47

Display Data	Battery Voltage
F0	Approx. 10.6 Vdc
E0	Approx. 9.9 Vdc
D0	Approx. 9.2 Vdc
C0	Approx. 8.5 Vdc
B0	Approx. 7.8 Vdc
A0	Approx. 7.1 Vdc
90	Approx. 6.4 Vdc
80	Approx. 5.7 Vdc
70	Approx. 5.0 Vdc

Using method:

Order	Page	Address	Data	Procedure
1	2	00	01	Specification of category 01
2	2	47		The battery voltage can be discriminated by the display data.

※ Voltage measurement accuracy is approx. ± 10%.

7. Battery voltage check

Page 2	Category 01	Address 47

Display Data	Battery Voltage
F0	Approx. 10.8 Vdc
E0	Approx. 9.9 Vdc
D0	Approx. 9.2 Vdc
C0	Approx. 8.5 Vdc
B0	Approx. 7.8 Vdc
A0	Approx. 7.1 Vdc
90	Approx. 6.4 Vdc
80	Approx. 5.7 Vdc
70	Approx. 5.0 Vdc

Using method:

Order	Page	Address	Data	Procedure
1	2	00	01	Specification of category 01
2	2	47		The battery voltage can be discriminated by the display data.

※ Voltage measurement accuracy is approx. ± 10%.

8. Mechanism controller input/output check

Page 2	Category 00	Address 83

Bit	Input Signal	Input Signal Level
0		
1	E/L DET	"1"=Hi8, "0"=Normal
2	SP/LP DET	"1"=SP, "0"=LP
3	CLOG DET	"1"=Clog detected, "0"=Others
4	REC PROOF	"1"=Recording prohibited, "0"=Recording possible
5	TAPE PREEND	"1"=Tape preend, "0"=Others
6	DEW DET	"0"=Condensation occured, "1"=Others
7	CASSETTE IN	"0"=No cassette

Using method:

Order	Page	Address	Data	Procedure
1	2	00	00	Specification of category 00
2	2	83		The condition of each input signal can be discriminated by differentiating the bit value of the display data.

Page 2	Category 00	Address 84

Bit	Input Signal	Input Signal Level
0	VA PB MODE	"1"=PB, "0"=REC
1	RP PB MODE	"1"=PB, "0"=REC
2	JOG	"1"=Variable speed playback, "0"=Others
3	ME/MP SW	"1"=ME tape, "0"=Other tape
4	Hi8 MP SW	"1"=Hi8 MP tape, "0"=Other tape
5	SERVO OPERATION	"1"=SP mode, "0"=LP mode
6	VIDEO MUTE	"1"=Mute, "0"=Video output
7	AUDIO MUTE	"1"=Mute, "0"=Audio output

Using method:

Order	Page	Address	Data	Procedure
1	2	00	00	Specification of category 00
2	2	84		The condition of each signal can be discriminated by differentiating the bit value of the display data.

8. **Mechanism controller input/output check**

Page 2	Category 00	Address 83

Bit	Input Signal	Input Signal Level
0		
1	E/L DET	"1"=HB, "0"=Normal
2	SP/LP DET	"1"=SP, "0"=LP
3	CLOG DET	"1"=Clog detected, "0"=Others
4	REC PROOF	"1"=Recording prohibited, "0"=Recording possible
5	TAPE PREEND	"1"=Tape preend, "0"=Others
6	DEW DET	"0"=Condensation occured, "1"=Others
7	CASSETTE IN	"0"=No cassette

Using method:

Order	Page	Address	Data	Procedure
1	2	00	00	Specification of category 00
2	2	83		The condition of each input signal can be discriminated by differentiating the bit value of the display data.

Page 2	Category 00	Address 84

Bit	Input Signal	Input Signal Level
0	VA PB MODE	"1"=PB, "0"=REC
1	RP PB MODE	"1"=PB, "0"=REC
2	JOG	"1"=Variable speed playback, "0"=Others
3	ME/MP SW	"1"=ME tape, "0"=Other tape
4	HB MP SW	"1"=HB MP tape, "0"=Other tape
5	SERVO OPERATION	"1"=SP mode, "0"=LP mode
6	VIDEO MUTE	"1"=Mute, "0"=Video output
7	AUDIO MUTE	"1"=Mute, "0"=Audio output

Using method:

Order	Page	Address	Data	Procedure
1	2	00	00	Specification of category 00
2	2	84		The condition of each signal can be discriminated by differentiating the bit value of the display data.

9. Mode switch and CC DOWN switch check

The mode switch position (mechanical section condition) can be checked.

Page 3	Category 00	Address E9

Bit7	Bit6	Bit5	Bit4	Bit3	Bit2	Bit1	Bit0
MSW 2	MSW 1	MSW 0	CC DOWN				

				DATA	POSITION	FUNCTION
0	0	0	0/1	E*/F*	BL	Interval of each position
0	1	1	1	7*	END	FULL END processing (T side lock removal)
0	0	1	1	3*	EJECT	Cassette compartment ejection
1	0	1	1	B*	USE	EJECTED (Unskate end)
0	0	1	0	2*	LOAD	LOADING (Skate in)
1	0	0	0	8*	READY	NORMAL STOP position
1	1	0	0	C*	TURN	OFF of pinch roller only with STOP↔FF/REW (oscillating position)
0	1	0	0	4*	RP	PB, REC, RVS, REV, CUE
0	0	0	0	0*	FF	FF/REW

*: Don't care

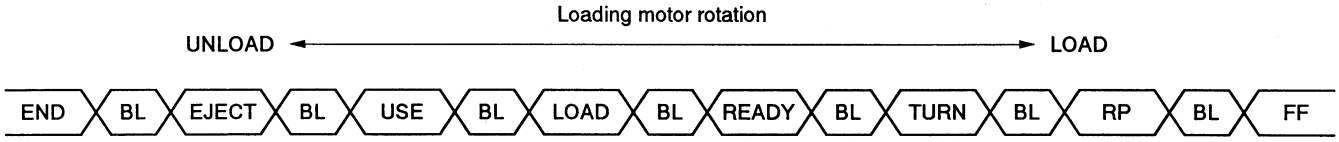

Using method:

Order	Page	Address	Data	Procedure
1	3	00	00	Specification of category 00
2	3	E9		The mode switch position and CC DOWN switch condition can be discriminated by the display data.

9. Mode switch and CC DOWN switch check

The mode switch position (mechanical section condition) can be checked.

Page 3	Category 00	Address E9

Bit7	Bit6	Bit5	Bit4	Bit3	Bit2	Bit1	Bit0
MSW 2	MSW 1	MSW 0	CC DOWN				

				DATA	POSITION	FUNCTION
0	0	0	0/1	E*/F*	BL	Interval of each position
0	1	1	1	7*	END	PULL END processing (T side lock removal)
0	0	1	1	3*	EJECT	Cassette compartment ejection
1	0	1	1	B*	USE	EJECTED (Unloaded end)
0	0	1	0	2*	LOAD	LOADING (Starts in)
1	0	0	0	8*	READY	NORMAL STOP position
1	1	0	0	C*	TURN	OFF of pinch roller only with STOP↔FF/RBW (oscillating position)
0	1	0	0	4*	RP	PB, REC, RVS, RBV, CUE
0	0	0	0	0*	FF	FF/REW

*: Don't care

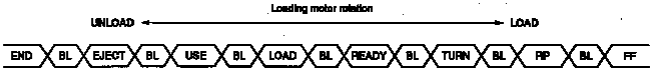

Using method:

Order	Page	Address	Data	Procedure
1	3	00	00	Specification of category 00
2	3	E9		The mode switch position and CC DOWN switch condition can be discriminated by the display data.

10. Tape top/end sensor check

Page 3	Category 02	Address 0A

Display Data	Tape Top/End Sensor Condition
00	Tape present (Middle of tape)
01	Tape end
10	Tape top
11	No tape

Tape end sensor condition
Tape top sensor condition

"0"=Non active (Not receiving light)
"1"=Active (Receiving light)

Using method:

Order	Page	Address	Data	Procedure
1	3	00	02	Specification of category 02
2	3	0E	10	Request for tape top/end sampling operations
3	3	0A		The condition of the tape top/end sensor can be discriminated by the display data.

11. Version of mechanical control microprocessor

Page 3	Category 02	Address 0B

Display Data	Microprocessor version
01	Version 1

Using method:

Order	Page	Address	Data	Procedure
1	3	00	02	Specification of category 02
2	3	0B		The microprocessor version can be discriminated by the display data.

10. Tape top/end sensor check

Page 3	Category 02	Address 0A

Display Data	Tape Top/End Sensor Condition
00	Tape present (Middle of tape)
01	Tape end
10	Tape top
11	No tape

Tape end sensor condition — "0"=Non active (Not receiving light)
Tape top sensor condition — "1"=Active (Receiving light)

Using method:

Order	Page	Address	Data	Procedure
1	3	00	02	Specification of category 02
2	3	0E	10	Request for tape top/end sampling operations
3	3	0A		The condition of the tape top/end sensor can be discriminated by the display data.

11. Version of mechanical control microprocessor

Page 3	Category 02	Address 0B

Display Data	Microprocessor version
01	Version 1

Using method:

Order	Page	Address	Data	Procedure
1	3	00	02	Specification of category 02
2	3	0B		The microprocessor version can be discriminated by the display data.

12. Page D address list for standard 8 mm model (CCD-TR42/TR70/TR72/TR80/TR82/TR430/TR550)

Note 1: The adjustment data initial value is the data input before performing video section adjustments (Page D) if the Page D data has been erased due to some reason.

Note 2: The data written in the adjustment data memo column are fixed.
After adjusting, check that these data have not been rewritten by mistake.

Note 3: In some case, data have been input to the page D address 91 to AF, BC to D3 and F0 to FF. This has no relation to the adjustment.

Address	Name	Function [ ] contains the adjustment voltage output terminal	Adjustment data	
			Initial value	Memo column
00		Not used		
01		Not used		
02	TEST MODE (MECHA-CON)	Mecha-con (IC505) test mode	00	00
03	TEST MODE (MODE-CON)	Mode-con (IC503) test mode	00	00
04	SW POSITION (L)	Switching position adjustment (Low)	80	
05	SW POSITION (H)	Switching position adjustment (High)	0B	
06	BATTERY END	Battery end adjustment	66	
07	BATTERY PRE-END	Battery end adjustment	7F	
08	BATTERY LOW	Battery end adjustment	84	
09	BATTERY MIDDLE	Battery end adjustment	8A	
0A	BATTERY HIGH	Battery end adjustment	8E	
0B			00	00
0C		Not used		
0D		Not used		
0E		Not used		
0F		Not used		
10		Design data	00	00
11		Design data	00	00
12		Design data	00	00
13		Design data	00	00
14		Design data	95	95
15		Design data	77	77
16		Design data	01	01
17	VARIATION	CCD-TR42/TR70/TR72/TR80/TR82	02	02
		CCD-TR430/TR550	03	03
18	FEATURE	CCD-TR42/TR70/TR72/TR80/TR430	04	04
		CCD-TR82/TR550	64	64
19	FEATURE		80	80
1A	FEATURE	CCD-TR42/TR70/TR82/TR550	58	58
		CCD-TR72/TR80/TR430	DC	DC
1B	FEATURE	CCD-TR42/TR70/TR72/TR80/TR82/TR430	20	20
		CCD-TR550	60	60
1C	FEATURE		00	00
1D	FEATURE		00	00
1E		Not used		
1F		Not used		

Table 7-3-2. (1)

12. Page D address list for standard 8 mm model (CCD-TR42/TR70/TR72/TR80/TR82/TR430/TR550)

Note 1: The adjustment data initial value is the data input before performing video section adjustments (Page D) if the Page D data has been erased due to some reason.

Note 2: The data written in the adjustment data memo column are fixed.
After adjusting, check that these data have not been rewritten by mistake.

Note 3: In some case, data have been input to the page D address 91 to AF, BC to D3 and F0 to FF. This has no relation to the adjustment.

Address	Name	Function [ ] contains the adjustment voltage output terminal	Adjustment data	
			Initial value	Memo column
00		Not used		
01		Not used		
02	TEST MODE (MECHA-CON)	Mecha-con (IC505) test mode	00	00
03	TEST MODE (MODE-CON)	Mode-con (IC505) test mode	00	00
04	SW POSITION (L)	Switching position adjustment (Low)	80	
05	SW POSITION (H)	Switching position adjustment (High)	0B	
06	BATTERY END	Battery end adjustment	66	
07	BATTERY PRE-END	Battery end adjustment	7F	
08	BATTERY LOW	Battery end adjustment	84	
09	BATTERY MIDDLE	Battery end adjustment	8A	
0A	BATTERY HIGH	Battery end adjustment	8E	
0B			00	00
0C		Not used		
0D		Not used		
0E		Not used		
0F		Not used		
10		Design data	00	00
11		Design data	00	00
12		Design data	00	00
13		Design data	00	00
14		Design data	95	95
15		Design data	77	77
16		Design data	01	01
17	VARIATION	CCD-TR42/TR70/TR72/TR80/TR82	02	02
		CCD-TR430/TR550	03	03
18	FEATURE	CCD-TR42/TR70/TR72/TR80/TR430	04	04
		CCD-TR82/TR550	64	64
19	FEATURE		80	80
1A	FEATURE	CCD-TR42/TR70/TR82/TR550	58	58
		CCD-TR72/TR80/TR430	DC	DC
1B	FEATURE	CCD-TR42/TR70/TR72/TR80/TR82/TR430	20	20
		CCD-TR550	60	60
1C	FEATURE		00	00
1D	FEATURE		00	00
1E		Not used		
1F		Not used		

Table 7-3-2. (1)

Address	Name	Function [ ] contains the adjustment voltage output terminal	Adjustment data	
			Initial value	Memo column
20		Not used		
21		Not used		
22		Not used		
23			00	00
24		Design data	00	00
25		Design data	00	00
26		Design data	14	14
27		Design data	14	14
28		Design data	64	64
29		Design data	64	64
2A		Design data	6E	6E
2B		Design data	6E	6E
2C		Design data	64	64
2D		Design data	64	64
2E		Design data	6E	6E
2F		Design data	6E	6E
30		Design data	DC	DC
31		Design data	DC	DC
32	EVR REC C (SP L ME)	SP Normal ME REC C adjustment [IC951 ⑩]	DC	
33	EVR REC C (SP L MP)	SP Normal MP REC C adjustment [IC951 ⑩]	DC	
34			DC	DC
35			DC	DC
36		Design data	DC	DC
37		Design data	DC	DC
38	EVR REC LOW 1 (ME)	1ch ME REC L adjustment [IC951 ㊲]	E4	
39	EVR REC LOW 1 (MP)	1ch MP REC L adjustment [IC951 ㊲]	EB	
3A	EVR REC LOW 2 (ME)	2ch ME REC L adjustment [IC951 ㊲]	E4	
3B	EVR REC LOW 2 (MP)	2ch MP REC L adjustment [IC951 ㊲]	EB	
3C		Not used		
3D		Not used		
3E		Not used		
3F		Not used		
40		Not used		
41		Not used		
42	EVR REC Y 1CH (L ME)	1ch Normal ME REC Y level adjustment [IC951 ㊱]	A9	
43	EVR REC Y 1CH (L MP)	1ch Normal MP REC Y level adjustment [IC951 ㊱]	A9	
44		Not used		
45		Not used		
46	EVR REC Y 2CH (L ME)	2ch Normal ME REC Y level adjustment [IC951 ㊱]	A9	
47	EVR REC Y 2CH (L MP)	2ch Normal MP REC Y level adjustment [IC951 ㊱]	A9	
48		Not used		
49		Not used		

Table 7-3-2. (2)

Address	Name	Function [ ] contains the adjustment voltage output terminal	Adjustment data	
			Initial value	Memo column
20		Not used		
21		Not used		
22		Not used		
23			00	00
24		Design data	00	00
25		Design data	00	00
26		Design data	14	14
27		Design data	14	14
28		Design data	64	64
29		Design data	64	64
2A		Design data	6E	6E
2B		Design data	6E	6E
2C		Design data	64	64
2D		Design data	64	64
2E		Design data	6E	6E
2F		Design data	6E	6E
30		Design data	DC	DC
31		Design data	DC	DC
32	EVR REC C (SP L ME)	SP Normal ME REC C adjustment [IC951 ⑭]	DC	
33	EVR REC C (SP L MP)	SP Normal MP REC C adjustment [IC951 ⑮]	DC	
34			DC	DC
35			DC	DC
36		Design data	DC	DC
37		Design data	DC	DC
38	EVR REC LOW 1 (ME)	1ch ME REC L adjustment [IC951 ⑯]	E4	
39	EVR REC LOW 1 (MP)	1ch MP REC L adjustment [IC951 ⑰]	EB	
3A	EVR REC LOW 2 (ME)	2ch ME REC L adjustment [IC951 ⑱]	E4	
3B	EVR REC LOW 2 (MP)	2ch MP REC L adjustment [IC951 ⑲]	EB	
3C		Not used		
3D		Not used		
3E		Not used		
3F		Not used		
40		Not used		
41		Not used		
42	EVR REC Y 1CH (L ME)	1ch Normal ME REC Y level adjustment [IC951 ⑳]	A9	
43	EVR REC Y 1CH (L MP)	1ch Normal MP REC Y level adjustment [IC951 ㉑]	A9	
44		Not used		
45		Not used		
46	EVR REC Y 2CH (L ME)	2ch Normal ME REC Y level adjustment [IC951 ㉒]	A9	
47	EVR REC Y 2CH (L MP)	2ch Normal MP REC Y level adjustment [IC951 ㉓]	A9	
48		Not used		
49		Not used		

Table 7-3-2. (2)

Address	Name	Function [ ] contains the adjustment voltage output terminal	Adjustment data	
			Initial value	Memo column
4A		Not used		
4B		Not used		
4C		Not used		
4D		Not used		
4E		Not used		
4F		Not used		
50		Design data	A2	A2
51		Design data	A1	A1
52		Not used		
53		Not used		
54			00	00
55			00	00
56			90	90
57			00	00
58			00	00
59			75	75
5A			E6	E6
5B			E6	E6
5C			E6	E6
5D			E6	E6
5E	EVR MT 1CH (L)	1ch Normal frequency characteristic adjustment [IC951 ⑱]	E6	
5F			E2	E2
60			E2	E2
61			E2	E2
62			E2	E2
63	EVR MT 2CH (L)	2ch Normal frequency characteristic adjustment [IC951 ⑳]	E2	
64		Not used		
65		Not used		
66		Not used		
67		Not used		
68		Not used		
69			E6	E6
6A			E6	E6
6B			E6	E6
6C			E6	E6
6D			E6	E6
6E		Not used		
6F		Not used		
70	EVR SYNC AGC	SYNC AGC adjustment [IC951 ㊳]	8E	
71	EVR COMB ADJ	Chroma comb filter adjustment [IC951 ㊴]	95	
72			B0	B0
73			B0	B0

Table 7-3-2. (3)

Address	Name	Function [ ] contains the adjustment voltage output terminal	Adjustment data Initial value	Memo column
4A		Not used		
4B		Not used		
4C		Not used		
4D		Not used		
4E		Not used		
4F		Not used		
50		Design data	A2	A2
51		Design data	A1	A1
52		Not used		
53		Not used		
54			00	00
55			00	00
56			90	90
57			00	00
58			00	00
59			75	75
5A			E6	E6
5B			E6	E6
5C			E6	E6
5D			E6	E6
5E	EVR MT 1CH (L)	1ch Normal frequency characteristic adjustment [IC951 ⑩]	E6	
5F			E2	E2
60			E2	E2
61			E2	E2
62			E2	E2
63	EVR MT 2CH (L)	2ch Normal frequency characteristic adjustment [IC951 ⑨]	E2	
64		Not used		
65		Not used		
66		Not used		
67		Not used		
68		Not used		
69			E6	E6
6A			E6	E6
6B			E6	E6
6C			E6	E6
6D			E6	E6
6E		Not used		
6F		Not used		
70	EVR SYNC AGC	SYNC AGC adjustment [IC951 ⑧]	8E	
71	EVR COMB ADJ	Chroma comb filter adjustment [IC951 ⑦]	95	
72			B0	B0
73			B0	B0

Table 7-3-2. (3)

14. Chroma Emphasis Adjustment 2 (V8 board)

Emphasis center frequency setting. If deviated, this causes unnatural color.

Mode	Playback
Signal	Alignment tape: For checking operations (WR5-5NSP) Color bar section
Measurement Point	Video output terminal
Measuring Instrument	Vectorscope
Adjustment Page	D
Adjustment Address	81 (C EMPH (PB)) 80 (C EMPH (EE))
Specified Value	The path from the blue luminance point to black luminance point should be a straight line.

Adjusting method:

1) Page: 1, address: 00, data: 01
2) Change the data of page: D, address: 81, and adjust so that the path from the blue luminance point to black luminance point becomes a straight line.
3) Press the PAUSE button of the adjusting remote commander.
4) Set the same data as address: 81 of page: D to address: 80 of page: D.
5) Press PAUSE button of the adjusting remote commander.

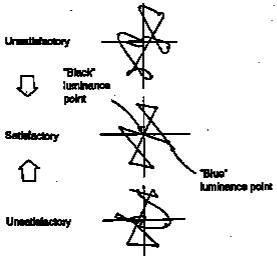

Fig. 7-3-20.

15. Comb Filter Fine Adjustment (V8 board)

Set the level and phase of the 1H delayed signal for the comb filter. If deviated, this causes marked occurrence of beats in played back picture.

Mode	Playback
Signal	Alignment tape: For checking operations (WR5-5NSP) Color bar section
Measurement Point	Video output terminal
Measuring Instrument	Vectorscope
Adjusting Element	RV202 (PHASE)
Adjustment Page	D
Adjustment Address	71 (COMB ADJ)
Specified Value	Minimum color luminance point movement when the "Edit" switch is turned on/off

Note 1: Turn the edit ON/OFF at the menu screen.

Adjusting method:

1) Page: 1, address: 00, data: 01
2) Minimize the movements of the color luminance point when the edit is on/off with RV202.
3) Change the data of page: D, address: 71 and minimize the movements of the color luminance point when the edit is on/off
4) Press the PAUSE button of the adjusting remote commander.
5) Repeat steps 2) to 4).

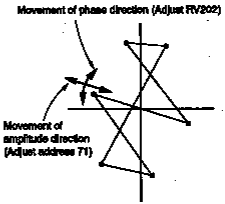

Fig. 7-3-21.

Address	Name	Function [ ] contains the adjustment voltage output terminal	Adjustment data	
			Initial value	Memo column
74		Not used		
75	EVR CARRIER (L)	Normal Y-FM carrier frequency adjustment [IC951 ⑤]	BB	
76		Not used		
77	EVR DEVIATION (L)	Normal Y-FM deviation adjustment [IC951 ⑥]	97	
78			00	00
79			00	00
7A			86	86
7B			86	86
7C			00	00
7D			00	00
7E			00	00
7F			00	00
80	EVR C EMPH (EE)	EE chroma emphasis adjustment [IC951 ⑧]	99	
81	EVR C EMPH (PB)	PB chroma emphasis adjustment [IC951 ⑨]	99	
82	EVR EMPH (EE)	EE EMPH input level adjustment [IC951 ⑩]	A5	
83	EVR EMPH (PB)	PB EMPH input level adjustment [IC951 ⑪]	A9	
84		Not used		
85			69	69
86			00	00
87	EVR DE-EMPH (PB L)	Normal PB DE-EMPH level adjustment [IC951 ⑫]	69	
88			C0	C0
89			C0	C0
8A			00	00
8B			48	48
8C	EVR AUDIO MATRIX (EE)	EE matrix adjustment [IC951 ⑬] CCD-TR72/TR80/TR430	AF	
8D	EVR AUDIO MATRIX (PB)	PB matrix adjustment [IC951 ⑭] CCD-TR72/TR80/TR430	AF	
8E	EVR 1.7 MHz DEV	1.7 MHz deviation adjustment [IC951 ⑮] CCD-TR72/TR80/TR430	AF	
8F	EVR 1.5 MHz DEV	1.5 MHz deviation adjustment [IC951 ⑯]	AF	
90			60	60
91 to AF				
B0	BRIGHT	Bright adjustment [IC903 ①] CCD-TR70/TR80	A0	
B1	COLOR	Color setting [IC903 ②] CCD-TR70/TR80	AE	AE
B2	HUE	Hue setting [IC903 ③] CCD-TR70/TR80	95	95
B3	SUB BRIGHT R	Sub bright R adjustment [IC903 ④] CCD-TR70/TR80	7A	
B4	SUB BRIGHT B	Sub bright B adjustment [IC903 ⑤] CCD-TR70/TR80	6A	
B5	CONTRAST	Contrast adjustment [IC903 ⑥] CCD-TR70/TR80	70	
B6	VCO	VCO adjustment [IC903 ⑦] CCD-TR70/TR80	90	
B7	INVERTER CURRENT	Current consumption adjustment [IC903 ⑧] CCD-TR70/TR80	35	
B8	SUB CONTRAST R	Sub contrast R setting [IC903 ⑨] CCD-TR70/TR80	7A	7A
B9	SUB CONTRAST B	Sub contrast B setting [IC903 ⑩] CCD-TR70/TR80	7A	7A
BA	GAMMA 1	Gamma 1 setting [IC903 ⑪] CCD-TR70/TR80	70	70

Table 7-3-2. (4)

Address	Name	Function [ ] contains the adjustment voltage output terminal	Adjustment data	
			Initial value	Memo column
BB	GAMMA 2	Gamma 2 setting [IC903 ⑫] CCD-TR70/TR80	F0	F0
BC to D3				
D4	CCD FLAW DATA	CCDimager correction data (for backup) ※ Refer "CCD Imager Correction Data Writing" of Camera Section Adjustments		
D5	CCD FLAW DATA			
D6	CCD FLAW DATA			
D7	CCD FLAW DATA			
D8	CCD FLAW DATA			
D9	CCD FLAW DATA			
DA	CCD FLAW DATA			
DB	CCD FLAW DATA			
DC	CCD FLAW DATA			
DD	CCD FLAW DATA			
DE	CCD FLAW DATA			
DF	CCD FLAW DATA			
E0	CCD FLAW DATA			
E1	CCD FLAW DATA			
E2	CCD FLAW DATA			
E3	CCD FLAW DATA			
E4	EMERGENCY LAST CODE	Last emergency code	00	
E5	EMERGENCY LAST MODE	Last emergency mode	00	
E6		N.C.	00	
E7		N.C.	00	
E8	EMERGENCY 2ND CODE	2nd emergency code	00	
E9	EMERGENCY 2ND MODE	2nd emergency mode	00	
EA		N.C.	00	
EB		N.C.	00	
EC	EMERGENCY 1ST CODE	1st emergency code	00	
ED	EMERGENCY 1ST MODE	1st emergency mode	00	
EE		N.C.	00	
EF		N.C.	00	

Table 7-3-2. (5)

Address	Name	Function [ ] contains the adjustment voltage output terminal	Adjustment data	
			Initial value	Memo column
BB	GAMMA 2	Gamma 2 setting [IC903 ⑩] CCD-TR70/TR80	F0	F0
BC to D3				
D4	CCD FLAW DATA	CCDimager correction data (for backup) ※ Refer "CCD Imager Correction Data Writing" of Camera Section Adjustments		
D5	CCD FLAW DATA			
D6	CCD FLAW DATA			
D7	CCD FLAW DATA			
D8	CCD FLAW DATA			
D9	CCD FLAW DATA			
DA	CCD FLAW DATA			
DB	CCD FLAW DATA			
DC	CCD FLAW DATA			
DD	CCD FLAW DATA			
DE	CCD FLAW DATA			
DF	CCD FLAW DATA			
E0	CCD FLAW DATA			
E1	CCD FLAW DATA			
E2	CCD FLAW DATA			
E3	CCD FLAW DATA			
E4	EMERGENCY LAST CODE	Last emergency code	00	
E5	EMERGENCY LAST MODE	Last emergency mode	00	
E6		N.C.	00	
E7		N.C.	00	
E8	EMERGENCY 2ND CODE	2nd emergency code	00	
E9	EMERGENCY 2ND MODE	2nd emergency mode	00	
EA		N.C.	00	
EB		N.C.	00	
EC	EMERGENCY 1ST CODE	1st emergency code	00	
ED	EMERGENCY 1ST MODE	1st emergency mode	00	
EE		N.C.	00	
EF		N.C.	00	

Table 7-3-2. (5)

13. Page D address list for Hi8 model (CCD-TR400/TR750)

Note 1: The adjustment data initial value is the data input before performing video section adjustments (Page D) if the Page D data has been erased due to some reason.

Note 2: The data written in the adjustment data memo column are fixed.
After adjusting, check that these data have not been rewritten by mistake.

Note 3: In some case, data have been input to the page D address 91 to D3 and F0 to FF. This has no relation to the adjustment.

Address	Name	Function [ ] contains the adjustment voltage output terminal	Adjustment data	
			Initial value	Memo column
00		Not used		
01		Not used		
02	TEST MODE (MECHA-CON)	Mecha-con (IC505) test mode	00	00
03	TEST MODE (MODE-CON)	Mode-con (IC503) test mode	00	00
04	SW POSITION (L)	Switching position adjustment (Low)	80	
05	SW POSITION (H)	Switching position adjustment (High)	0B	
06	BATTERY END	Battery end adjustment	66	
07	BATTERY PRE-END	Battery end adjustment	7F	
08	BATTERY LOW	Battery end adjustment	84	
09	BATTERY MIDDLE	Battery end adjustment	8A	
0A	BATTERY HIGH	Battery end adjustment	8E	
0B			00	00
0C		Not used		
0D		Not used		
0E		Not used		
0F		Not used		
10			00	00
11			00	00
12			00	00
13			00	00
14			95	95
15			77	77
16			01	01
17	VARIATION	CCD-TR400	12	12
		CCD-TR750	13	13
18	FEATURE		E8	E8
19	FEATURE		80	80
1A	FEATURE		DC	DC
1B	FEATURE	CCD-TR400	20	20
		CCD-TR750	60	60
1C	FEATURE		00	00
1D	FEATURE		00	00
1E		Not used		
1F		Not used		

Table 7-3-3. (1)

13. Page D address list for HB model (CCD-TR400/TR750)

Note 1: The adjustment data initial value is the data input before performing video section adjustments (Page D) if the Page D data has been erased due to some reason.

Note 2: The data written in the adjustment data memo column are fixed.
After adjusting, check that these data have not been rewritten by mistake.

Note 3: In some case, data have been input to the page D address 91 to D3 and F0 to FF. This has no relation to the adjustment.

Address	Name	Function [ ] contains the adjustment voltage output terminal	Adjustment data	
			Initial value	Memo column
00		Not used		
01		Not used		
02	TEST MODE (MECHA-CON)	Mecha-con (IC505) test mode	00	00
03	TEST MODE (MODE-CON)	Mode-con (IC503) test mode	00	00
04	SW POSITION (L)	Switching position adjustment (Low)	80	
05	SW POSITION (H)	Switching position adjustment (High)	0B	
06	BATTERY END	Battery end adjustment	66	
07	BATTERY PRE-END	Battery end adjustment	7F	
08	BATTERY LOW	Battery end adjustment	84	
09	BATTERY MIDDLE	Battery end adjustment	8A	
0A	BATTERY HIGH	Battery end adjustment	8E	
0B			00	00
0C		Not used		
0D		Not used		
0E		Not used		
0F		Not used		
10			00	00
11			00	00
12			00	00
13			00	00
14			95	95
15			77	77
16			01	01
17	VARIATION	CCD-TR400	12	12
		CCD-TR750	13	13
18	FEATURE		E8	E8
19	FEATURE		80	80
1A	FEATURE		DC	DC
1B	FEATURE	CCD-TR400	20	20
		CCD-TR750	60	60
1C	FEATURE		00	00
1D	FEATURE		00	00
1E		Not used		
1F		Not used		

Table 7-3-3. (1)

Address	Name	Function [ ] contains the adjustment voltage output terminal	Adjustment data	
			Initial value	Memo column
20		Not used		
21		Not used		
22		Not used		
23			03	03
24		Design data	00	00
25		Design data	00	00
26		Design data	1C	1C
27		Design data	25	25
28		Design data	D8	D8
29		Design data	E5	E5
2A		Design data	DC	DC
2B		Design data	EF	EF
2C		Design data	D8	D8
2D		Design data	E5	E5
2E		Design data	DC	DC
2F		Design data	EF	EF
30	EVR REC C (SP E ME)	SP Hi8 ME REC C adjustment [IC951 ⑩]	E6	
31	EVR REC C (SP E MP)	SP Hi8 MP REC C adjustment [IC951 ⑩]	E6	
32	EVR REC C (SP L ME)	SP Normal ME REC C adjustment [IC951 ⑩]	E6	
33	EVR REC C (SP L MP)	SP Normal MP REC C adjustment [IC951 ⑩]	E6	
34	EVR REC C (LP E ME)	LP Hi8 ME REC C adjustment [IC951 ⑩]	E6	E6
35	EVR REC C (LP E MP)	LP Hi8 MP REC C adjustment [IC951 ⑩]	E6	E6
36	EVR REC C (LP L ME)	LP Normal ME REC C adjustment [IC951 ⑩]	E6	E6
37	EVR REC C (LP L MP)	LP Normal MP REC C adjustment [IC951 ⑩]	E6	E6
38	EVR REC LOW 1 (ME)	1ch ME REC L adjustment [IC951 ㊲]	D6	
39	EVR REC LOW 1 (MP)	1ch MP REC L adjustment [IC951 ㊲]	E0	
3A	EVR REC LOW 2 (ME)	2ch ME REC L adjustment [IC951 ㊲]	D6	
3B	EVR REC LOW 2 (MP)	2ch MP REC L adjustment [IC951 ㊲]	E0	
3C		Not used		
3D		Not used		
3E		Not used		
3F		Not used		
40	EVR REC Y 1CH (E ME)	1ch Hi8 ME REC Y level adjustment [IC951 ㊱]	D8	
41	EVR REC Y 1CH (E MP)	1ch Hi8 MP REC Y level adjustment [IC951 ㊱]	DD	
42	EVR REC Y 1CH (L ME)	1ch Normal ME REC Y level adjustment [IC951 ㊱]	DC	
43	EVR REC Y 1CH (L MP)	1ch Normal MP REC Y level adjustment [IC951 ㊱]	D5	
44	EVR REC Y 2CH (E ME)	2ch Hi8 ME REC Y level adjustment [IC951 ㊱]	D8	
45	EVR REC Y 2CH (E MP)	2ch Hi8 MP REC Y level adjustment [IC951 ㊱]	DD	
46	EVR REC Y 2CH (L ME)	2ch Normal ME REC Y level adjustment [IC951 ㊱]	DC	
47	EVR REC Y 2CH (L MP)	2ch Normal MP REC Y level adjustment [IC951 ㊱]	D5	
48		Not used		
49		Not used		

Table 7-3-3. (2)

Address	Name	Function [ ] contains the adjustment voltage output terminal	Adjustment data	
			Initial value	Memo column
20		Not used		
21		Not used		
22		Not used		
23			03	03
24		Design data	00	00
25		Design data	00	00
26		Design data	1C	1C
27		Design data	25	25
28		Design data	D8	D8
29		Design data	E5	E5
2A		Design data	DC	DC
2B		Design data	EF	EF
2C		Design data	D8	D8
2D		Design data	E5	E5
2E		Design data	DC	DC
2F		Design data	EF	EF
30	EVR REC C (SP E ME)	SP Hi8 ME REC C adjustment [IC951 ⑧]	E6	
31	EVR REC C (SP E MP)	SP Hi8 MP REC C adjustment [IC951 ⑧]	E6	
32	EVR REC C (SP L ME)	SP Normal ME REC C adjustment [IC951 ⑧]	E6	
33	EVR REC C (SP L MP)	SP Normal MP REC C adjustment [IC951 ⑧]	E6	
34	EVR REC C (LP E ME)	LP Hi8 ME REC C adjustment [IC951 ⑧]	E6	E6
35	EVR REC C (LP E MP)	LP Hi8 MP REC C adjustment [IC951 ⑧]	E6	E6
36	EVR REC C (LP L ME)	LP Normal ME REC C adjustment [IC951 ⑧]	E6	E6
37	EVR REC C (LP L MP)	LP Normal MP REC C adjustment [IC951 ⑧]	E6	E6
38	EVR REC LOW 1 (ME)	1ch ME REC L adjustment [IC951 ⑧]	D6	
39	EVR REC LOW 1 (MP)	1ch MP REC L adjustment [IC951 ⑧]	E0	
3A	EVR REC LOW 2 (ME)	2ch ME REC L adjustment [IC951 ⑧]	D6	
3B	EVR REC LOW 2 (MP)	2ch MP REC L adjustment [IC951 ⑧]	E0	
3C		Not used		
3D		Not used		
3E		Not used		
3F		Not used		
40	EVR REC Y 1CH (E ME)	1ch Hi8 ME REC Y level adjustment [IC951 ⑧]	D8	
41	EVR REC Y 1CH (E MP)	1ch Hi8 MP REC Y level adjustment [IC951 ⑧]	DD	
42	EVR REC Y 1CH (L ME)	1ch Normal ME REC Y level adjustment [IC951 ⑧]	DC	
43	EVR REC Y 1CH (L MP)	1ch Normal MP REC Y level adjustment [IC951 ⑧]	D5	
44	EVR REC Y 2CH (E ME)	2ch Hi8 ME REC Y level adjustment [IC951 ⑧]	D8	
45	EVR REC Y 2CH (E MP)	2ch Hi8 MP REC Y level adjustment [IC951 ⑧]	DD	
46	EVR REC Y 2CH (L ME)	2ch Normal ME REC Y level adjustment [IC951 ⑧]	DC	
47	EVR REC Y 2CH (L MP)	2ch Normal MP REC Y level adjustment [IC951 ⑧]	D5	
48		Not used		
49		Not used		

Table 7-3-3. (2)

Address	Name	Function [ ] contains the adjustment voltage output terminal	Adjustment data	
			Initial value	Memo column
4A		Not used		
4B		Not used		
4C		Not used		
4D		Not used		
4E		Not used		
4F		Not used		
50			D3	D3
51			CE	CE
52		Not used		
53		Not used		
54			C2	C2
55			C2	C2
56			97	97
57			70	70
58			70	70
59			85	85
5A	EVR MT 1CH (SP E ME)	1ch SP Hi8 ME frequency characteristic adjustment [IC951 ⑱]	DC	
5B	EVR MT 1CH (SP E MP)	1ch SP Hi8 MP frequency characteristic adjustment [IC951 ⑱]	DC	
5C	EVR MT 1CH (LP E ME)	1ch LP Hi8 ME frequency characteristic adjustment [IC951 ⑱]	DC	
5D	EVR MT 1CH (LP E MP)	1ch LP Hi8 MP frequency characteristic adjustment [IC951 ⑱]	DC	
5E	EVR MT 1CH (L)	1ch Normal frequency characteristic adjustment [IC951 ⑱]	DC	
5F	EVR MT 2CH (SP E ME)	2ch SP Hi8 ME frequency characteristic adjustment [IC951 ⑳]	CD	
60	EVR MT 2CH (SP E MP)	2ch SP Hi8 MP frequency characteristic adjustment [IC951 ⑳]	CD	
61	EVR MT 2CH (LP E ME)	2ch LP Hi8 ME frequency characteristic adjustment [IC951 ⑳]	CD	
62	EVR MT 2CH (LP E MP)	2ch LP Hi8 MP frequency characteristic adjustment [IC951 ⑳]	CD	
63	EVR MT 2CH (L)	2ch Normal frequency characteristic adjustment [IC951 ⑳]	CD	
64		Not used		
65		Not used		
66		Not used		
67		Not used		
68		Not used		
69			DC	DC
6A			DC	DC
6B			DC	DC
6C			DC	DC
6D			DC	DC
6E		Not used		
6F		Not used		
70	EVR SYNC AGC	SYNC AGC adjustment [IC951 ㊳]	8E	
71	EVR COMB ADJ	Chroma comb filter adjustment [IC951 ㊴]	95	
72			B0	B0
73			B0	B0

Table 7-3-3. (3)

Address	Name	Function [ ] contains the adjustment voltage output terminal	Adjustment data	
			Initial value	Memo column
4A		Not used		
4B		Not used		
4C		Not used		
4D		Not used		
4E		Not used		
4F		Not used		
50			D3	D3
51			CE	CE
52		Not used		
53		Not used		
54			C2	C2
55			C2	C2
56			97	97
57			70	70
58			70	70
59			85	85
5A	EVR MT 1CH (SP E ME)	1ch SP Hi8 ME frequency characteristic adjustment [IC951 ⑭]	DC	
5B	EVR MT 1CH (SP E MP)	1ch SP Hi8 MP frequency characteristic adjustment [IC951 ⑮]	DC	
5C	EVR MT 1CH (LP E ME)	1ch LP Hi8 ME frequency characteristic adjustment [IC951 ⑯]	DC	
5D	EVR MT 1CH (LP E MP)	1ch LP Hi8 MP frequency characteristic adjustment [IC951 ⑰]	DC	
5E	EVR MT 1CH (L)	1ch Normal frequency characteristic adjustment [IC951 ⑱]	DC	
5F	EVR MT 2CH (SP E ME)	2ch SP Hi8 ME frequency characteristic adjustment [IC951 ⑲]	CD	
60	EVR MT 2CH (SP E MP)	2ch SP Hi8 MP frequency characteristic adjustment [IC951 ⑳]	CD	
61	EVR MT 2CH (LP E ME)	2ch LP Hi8 ME frequency characteristic adjustment [IC951 ㉑]	CD	
62	EVR MT 2CH (LP E MP)	2ch LP Hi8 MP frequency characteristic adjustment [IC951 ㉒]	CD	
63	EVR MT 2CH (L)	2ch Normal frequency characteristic adjustment [IC951 ㉓]	CD	
64		Not used		
65		Not used		
66		Not used		
67		Not used		
68		Not used		
69			DC	DC
6A			DC	DC
6B			DC	DC
6C			DC	DC
6D			DC	DC
6E		Not used		
6F		Not used		
70	EVR SYNC AGC	SYNC AGC adjustment [IC951 ㉔]	8E	
71	EVR COMB ADJ	Chroma comb filter adjustment [IC951 ㉕]	95	
72			B0	B0
73			B0	B0

Table 7-3-3. (3)

Address	Name	Function [ ] contains the adjustment voltage output terminal	Adjustment data	
			Initial value	Memo column
74	EVR CARRIER (E)	Hi8 Y-FM carrier frequency adjustment [IC951 ㊸]	C3	
75	EVR CARRIER (L)	Normal Y-FM carrier frequency adjustment [IC951 ㊸]	BB	
76	EVR DEVIATION (E)	Hi8 Y-FM deviation adjustment [IC951 ㊹]	A6	
77	EVR DEVIATION (L)	Normal Y-FM deviation adjustment [IC951 ㊹]	97	
78			59	59
79			53	53
7A			7B	7B
7B			7B	7B
7C			00	00
7D			00	00
7E			00	00
7F			00	00
80	EVR C EMPH (EE)	EE chroma emphasis adjustment [IC951 ㊷]	99	
81	EVR C EMPH (PB)	PB chroma emphasis adjustment [IC951 ㊷]	99	
82	EVR EMPH (EE)	EE EMPH input level adjustment [IC951 ㊽]	A5	
83	EVR EMPH (PB)	PB EMPH input level adjustment [IC951 ㊽]	90	
84		Not used		
85			AA	AA
86	EVR DE-EMPH (PB E)	Hi8 PB DE-EMPH level adjustment [IC951 ㊼]	B0	
87	EVR DE-EMPH (PB L)	Normal PB DE-EMPH level adjustment [IC951 ㊼]	A2	
88			00	00
89			00	00
8A			00	00
8B			48	48
8C	EVR AUDIO MATRIX (EE)	EE matrix adjustment [IC951 ㉓]	AF	
8D	EVR AUDIO MATRIX (PB)	PB matrix adjustment [IC951 ㉓]	AF	
8E	EVR 1.7 MHz DEV	1.7 MHz deviation adjustment [IC951 ㉖]	AF	
8F	EVR 1.5 MHz DEV	1.5 MHz deviation adjustment [IC951 ㉗]	AF	
90			60	60
91 to D3				
D4	CCD FLAW PATTERN	CCDimager correction data (for backup) ※ Refer "CCD Imager Correction Data Writing" of Camera Section Adjustments		
D5	CCD FLAW DATA			
D6	CCD FLAW DATA			
D7	CCD FLAW DATA			
D8	CCD FLAW DATA			
D9	CCD FLAW DATA			
DA	CCD FLAW DATA			
DB	CCD FLAW DATA			
DC	CCD FLAW DATA			
DD	CCD FLAW DATA			
DE	CCD FLAW DATA			
DF	CCD FLAW DATA			

Table 7-3-3. (4)

Address	Name	Function [ ] contains the adjustment voltage output terminal	Adjustment data Initial value	Memo column
74	EVR CARRIER (E)	Hi8 Y-FM carrier frequency adjustment [IC951 ⑧]	C3	
75	EVR CARRIER (L)	Normal Y-FM carrier frequency adjustment [IC951 ⑨]	BB	
76	EVR DEVIATION (E)	Hi8 Y-FM deviation adjustment [IC951 ⑩]	A6	
77	EVR DEVIATION (L)	Normal Y-FM deviation adjustment [IC951 ⑪]	97	
78			59	59
79			53	53
7A			7B	7B
7B			7B	7B
7C			00	00
7D			00	00
7E			00	00
7F			00	00
80	EVR C EMPH (EE)	EE chroma emphasis adjustment [IC951 ⑫]	99	
81	EVR C EMPH (PB)	PB chroma emphasis adjustment [IC951 ⑬]	99	
82	EVR EMPH (EE)	EE EMPH input level adjustment [IC951 ⑭]	A5	
83	EVR EMPH (PB)	PB EMPH input level adjustment [IC951 ⑮]	90	
84		Not used		
85			AA	AA
86	EVR DE-EMPH (PB E)	Hi8 PB DE-EMPH level adjustment [IC951 ⑯]	B0	
87	EVR DE-EMPH (PB L)	Normal PB DE-EMPH level adjustment [IC951 ⑰]	A2	
88			00	00
89			00	00
8A			00	00
8B			48	48
8C	EVR AUDIO MATRIX (EE)	EE matrix adjustment [IC951 ⑱]	AF	
8D	EVR AUDIO MATRIX (PB)	PB matrix adjustment [IC951 ⑲]	AF	
8E	EVR 1.7 MHz DEV	1.7 MHz deviation adjustment [IC951 ⑳]	AF	
8F	EVR 1.5 MHz DEV	1.5 MHz deviation adjustment [IC951 ㉑]	AF	
90			60	60
91 to D3				
D4	CCD FLAW PATTERN	CCDimager correction data (for backup) ※ Refer "CCD Imager Correction Data Writing" of Camera Section Adjustments		
D5	CCD FLAW DATA			
D6	CCD FLAW DATA			
D7	CCD FLAW DATA			
D8	CCD FLAW DATA			
D9	CCD FLAW DATA			
DA	CCD FLAW DATA			
DB	CCD FLAW DATA			
DC	CCD FLAW DATA			
DD	CCD FLAW DATA			
DE	CCD FLAW DATA			
DF	CCD FLAW DATA			

Table 7-3-3. (4)

Address	Name	Function [ ] contains the adjustment voltage output terminal	Adjustment data	
			Initial value	Memo column
E0	CCD FLAW DATA	CCDimager correction data (for backup) ※ Refer "CCD Imager Correction Data Writing" of Camera Section Adjustments		
E1	CCD FLAW DATA			
E2	CCD FLAW DATA			
E3	CCD FLAW DATA			
E4	EMERGENCY LAST CODE	Last emergency code	00	
E5	EMERGENCY LAST MODE	Last emergency mode	00	
E6		N.C.	00	
E7		N.C.	00	
E8	EMERGENCY 2ND CODE	2nd emergency code	00	
E9	EMERGENCY 2ND MODE	2nd emergency mode	00	
EA		N.C.	00	
EB		N.C.	00	
EC	EMERGENCY 1ST CODE	1st emergency code	00	
ED	EMERGENCY 1ST MODE	1st emergency mode	00	
EE		N.C.	00	
EF		N.C.	00	

Table 7-3-3. (5)

Address	Name	Function [ ] contains the adjustment voltage output terminal	Adjustment data Initial value	Memo column
E0	CCD FLAW DATA	CCDimager correction data (for backup) ※ Refer "CCD Imager Correction Data Writing" of Camera Section Adjustments		
E1	CCD FLAW DATA			
E2	CCD FLAW DATA			
E3	CCD FLAW DATA			
E4	EMERGENCY LAST CODE	Last emergency code	00	
E5	EMERGENCY LAST MODE	Last emergency mode	00	
E6		N.C.	00	
E7		N.C.	00	
E8	EMERGENCY 2ND CODE	2nd emergency code	00	
E9	EMERGENCY 2ND MODE	2nd emergency mode	00	
EA		N.C.	00	
EB		N.C.	00	
EC	EMERGENCY 1ST CODE	1st emergency code	00	
ED	EMERGENCY 1ST MODE	1st emergency mode	00	
EE		N.C.	00	
EF		N.C.	00	

Table 7-3-3. (5)

3-2. POWER SYSTEM ADJUSTMENTS

1. Oscillator Frequency Check (DD board)

Mode	Camera record
Subject	Arbitrary
Measurement Point	Q905 collector
Measuring Instrument	Frequency counter
Specified Value	500 ± 50 kHz

Adjusting method:

1) Check that the oscillator frequency satisfies the specified value.

2. Power Voltage Check (DD board)

Mode	Camera record
Subject	Arbitrary
Measuring Instrument	Digital voltmeter
D5V check	
Measurement Point	Pin ㉙ of CN901
Specified Value	4.9 ± 0.1 Vdc
EVF5V check	
Measurement Point	Pin ㊴ of CN901
Specified Value	4.9 ± 0.1 Vdc
VID 5V check	
Measurement Point	Pins ㉓ and ㉔ of CN901
Specified Value	4.9 ± 0.1 Vdc
AU 5V check	
Measurement Point	Pin ㉟ of CN901
Specified Value	4.9 ± 0.1 Vdc
RP 5V check	
Measurement Point	Pin ⑳ of CN901
Specified Value	4.9 ± 0.1 Vdc
CAM5V check	
Measurement Point	Pins ㉕ and ㉖ of CN901
Specified Value	4.85 ± 0.1 Vdc
SS 3.6V check	
Measurement Point	Pin ㉝ of CN901
Specified Value	3.6 ± 0.1 Vdc
D3.6V check	
Measurement Point	Pins ㉑ and ㉒ of CN901
Specified Value	3.6 ± 0.1 Vdc
CAM 15V check	
Measurement Point	Pin ㉗ of CN901
Specified Value	15 ± 0.3 Vdc
CAM –8.5V check	
Measurement Point	Pin ㉛ of CN901
Specified Value	$-8.5^{+0.25}_{-0.4}$ Vdc
MT 5V check	
Measurement Point	Pins ⑨, ⑱ and ⑲ of CN901
Specified Value	5.0 ± 0.1 Vdc

3-3. SYSTEM CONTROL SYSTEM ADJUSTMENTS

1. Page D Initial Value Input

If the page D data has been erased due to some cause, input the page D initial value before performing adjustments. For details on the initial value, refer to "Page D address list" in "3-1-8. Service Mode".

Mode	E-E
Signal	Arbitrary
Adjustment Page	D
Adjustment Address	00 to 90, [B0 to BB], (D4 to EF)

[ ] : CCD-TR70/TR80

Input method:

1) Page: 1, address: 00, data: 01
2) Select page D, and input the initial value to each address. (After setting the data (initial value), be sure to press the PAUSE button of the adjusting remote commander before changing the address.)

3-2. POWER SYSTEM ADJUSTMENTS

1. Oscillator Frequency Check (DD board)

Mode	Camera record
Subject	Arbitrary
Measurement Point	Q805 collector
Measuring Instrument	Frequency counter
Specified Value	500 ± 50 kHz

Adjusting method:

1) Check that the oscillator frequency satisfies the specified value.

2. Power Voltage Check (DD board)

Mode	Camera record
Subject	Arbitrary
Measuring Instrument	Digital voltmeter
D5V check	
Measurement Point	Pin ⑧ of CN901
Specified Value	4.9 ± 0.1 Vdc
EVF5V check	
Measurement Point	Pin ⑳ of CN901
Specified Value	4.9 ± 0.1 Vdc
VID 5V check	
Measurement Point	Pins ⑭ and ⑮ of CN901
Specified Value	4.9 ± 0.1 Vdc
AU 5V check	
Measurement Point	Pin ㉓ of CN901
Specified Value	4.9 ± 0.1 Vdc
RP 5V check	
Measurement Point	Pin ⑲ of CN901
Specified Value	4.9 ± 0.1 Vdc
CAM5V check	
Measurement Point	Pins ㉔ and ㉕ of CN901
Specified Value	4.85 ± 0.1 Vdc
SS 3.6V check	
Measurement Point	Pin ㉖ of CN901
Specified Value	3.6 ± 0.1 Vdc
D3.6V check	
Measurement Point	Pins ㉑ and ㉒ of CN901
Specified Value	3.6 ± 0.1 Vdc
CAM 15V check	
Measurement Point	Pin ⑦ of CN901
Specified Value	15 ± 0.3 Vdc
CAM -8.5V check	
Measurement Point	Pin ⑥ of CN901
Specified Value	$-8.5^{+0.25}_{-0.4}$ Vdc
MT 5V check	
Measurement Point	Pins ⑪, ⑫ and ⑬ of CN901
Specified Value	5.0 ± 0.1 Vdc

3-3. SYSTEM CONTROL SYSTEM ADJUSTMENTS

1. Page D Initial Value Input

If the page D data has been erased due to some cause, input the page D initial value before performing adjustments. For details on the initial value, refer to "Page D address list" in "3-1-8. Service Mode".

Mode	E-E
Signal	Arbitrary
Adjustment Page	D
Adjustment Address	00 to 90, [B0 to BB], (D4 to EF)

[ ] : CCD-TR70/TR80

Input method:

1) Page: 1, address: 00, data: 01
2) Select page D, and input the initial value to each address. (After setting the data (initial value), be sure to press the PAUSE button of the adjusting remote commander before changing the address.)

2. Battery End Adjustment

Set the battery end voltage.
If the voltage is incorrect, the life of the battery will shorten.
The image at the battery end will also be rough.

Mode	Camera record
Signal	Arbitrary
Measurement Point	LCD display of the adjusting remote control unit
Measuring Instrument	
Adjustment Page	D
Specified Value	06 (BATT END) 07 (BATT PRE-END) 08 (BATT LOW) 09 (BATT MIDDLE) 0A (BATT HIGH)

Connection:

1) Connect the regulated power supply and the digital voltmeter as shown in Fig. 7-3-5.

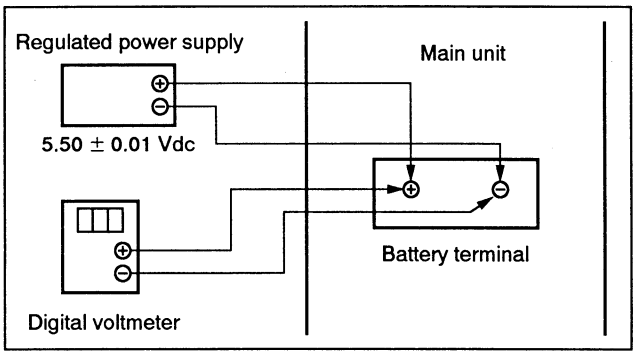

Fig. 7-3-5.

Adjusting method:

1) Adjust the output voltage of the regulated power supply so that the digital voltmeter display is 6.3 ± 0.1 Vdc.
2) Page: 1, address: 00, data: 01
3) Decrease the output voltage of the regulated power supply so that the digital voltmeter display is 5.50 ± 0.01 Vdc.
4) Set data: 01 to page: 2, address: 00.
   (Specification of category 01)
5) Select page: 2, address: 47, read the adjusting remote commander display data, and set to D_6.
6) Set data D_6 to page: D, address: 06, and press the PAUSE button of the adjusting remote commander.
7) Convert D_{47} to decimal notation, and obtain D_{47}'. (Refer to Table 7-1-4. "Hexadecimal notation–decimal notation conversion table")
8) Calculate D_7', D_8', D_9' and D_A' using following equations (decimal notation calculation).
   $D_7'=D_{47}'+3$
   $D_8'=D_{47}'+8$
   $D_9'=D_{47}'+14$
   $D_A'=D_{47}'+18$
9) Convert D_7', D_8', D_9' and D_A' to hexadecimal notation, and obtain D_7, D_8, D_9 and D_A.
10) Set data: D_7' to page: D, address: 07, and press the PAUSE button of the adjusting remote commander.
11) Set data: D_8' to page: D, address: 08, and press the PAUSE button.
12) Set data: D_9' to page: D, address: 09, and press the PAUSE button.
13) Set data: D_A to page: D, address: 0A, and press the PAUSE button.
14) Perform "Battery Down Check".

2. Battery End Adjustment

Set the battery end voltage.
If the voltage is incorrect, the life of the battery will shorten.
The image at the battery end will also be rough.

Mode	Camera record
Signal	Arbitrary
Measurement Point	LCD display of the adjusting remote control unit
Measuring Instrument	
Adjustment Page	D
Specified Value	06 (BATT END) 07 (BATT PRE-END) 08 (BATT LOW) 09 (BATT MIDDLE) 0A (BATT HIGH)

Connection:

1) Connect the regulated power supply and the digital voltmeter as shown in Fig. 7-3-5.

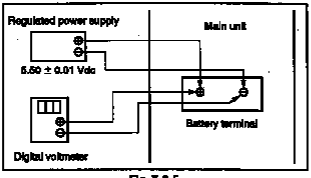

Fig. 7-3-5.

Adjusting method:

1) Adjust the output voltage of the regulated power supply so that the digital voltmeter display is 6.3 ± 0.1 Vdc.
2) Page: 1, address: 00, data: 01
3) Decrease the output voltage of the regulated power supply so that the digital voltmeter display is 5.50 ± 0.01 Vdc.
4) Set data: 01 to page: 2, address: 00.
   (Specification of category 01)
5) Select page: 2, address: 47, read the adjusting remote commander display data, and set to D6.
6) Set data D6 to page: D, address: 06, and press the PAUSE button of the adjusting remote commander.
7) Convert D07 to decimal notation, and obtain D07′. (Refer to Table 7-1-4. "Hexadecimal notation–decimal notation conversion table")
8) Calculate D7′, D8′, D9′ and DA′ using following equations (decimal notation calculation).
   D7′=D07′+3
   D8′=D07′+6
   D9′=D07′+14
   DA′=D07′+16
9) Convert D7′, D8′, D9′ and DA′ to hexadecimal notation, and obtain D7, D8, D9 and DA.
10) Set data: D7′ to page: D, address: 07, and press the PAUSE button of the adjusting remote commander.
11) Set data: D8′ to page: D, address: 08, and press the PAUSE button.
12) Set data: D9′ to page: D, address: 09, and press the PAUSE button.
13) Set data: DA to page: D, address: 0A, and press the PAUSE button.
14) Perform "Battery Down Check".

3. Battery Down Check

Mode	Camera record
Subject	Arbitrary

Connection

1) Connect the regulated power supply and the digital voltmeter as shown in Fig. 7-3-5.

Checking method:

Remove the adjusting remote commander, and perform the following check. If the check is not satisfied, perform from the beginning again.

1) Adjust the output voltage of the regulated power supply so that the digital voltmeter display becomes 6.3 ± 0.1 Vdc.
2) Set to the camera recording mode.
3) Check that the mark on the EVF (viewfinder) display is not lighted up. (TALLY lamp lights up).
4) Decrease the the output voltage of the regulated power supply so that the digital voltmeter display becomes 5.54 ± 0.01 Vdc.
5) Check that the mark on the EVF display and the TALLY lamp blinks every second.
6) Decrease the the output voltage of the regulated power supply so that the digital voltmeter display becomes 5.42 ± 0.01 Vdc.
7) Check that the mark on the EVF display and the TALLY lamp are blinking faster, the VTR stops and the power supply turns off.

3-4. SERVO SYSTEM ADJUSTMENTS

1. Switching Position Adjustment (VS board)

Switching timing of video head setting. If deviated in this case causes switching noise or jitter on the played back screen.

Mode	Playback
Signal	Alignment tape: For tracking adjustment (WR5-1NP)
Measurement Point	CH1: Pin ④ of CN101 (RF SWP) CH2: Pin ③ of CN101 (PB RF)
Measuring Instrument	Oscilloscope
Adjustment Page	D
Adjustment Address	04 (SW POSITION) (LOW) 05 (SW POSITION) (HIGH)
Specified Value	t_1=0 ± 10 μsec

Adjusting method:

1) Page: 1, address: 00, data: 01
2) Set data: 0B to page: D, address: 05.
3) Change the data of page: D, address: 05 and minimize "t1". (Coarse adjustment)
4) Change the data of page: D, address: 04, and adjust so that the switching position (t_1) becomes the specified value. (Fine adjustment)
5) Press the PAUSE button of the adjusting remote commander.

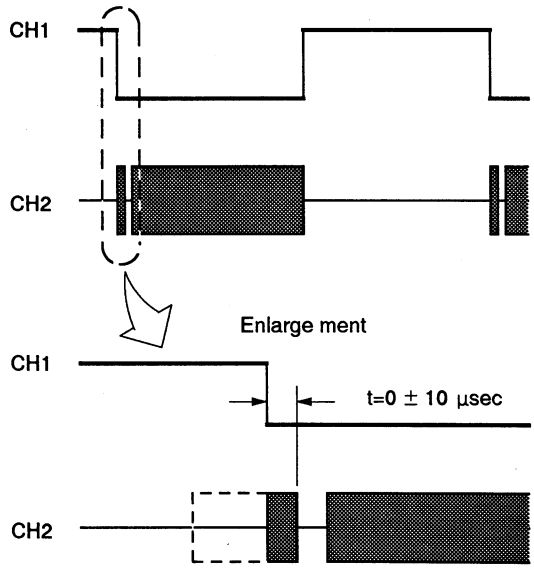

Fig. 7-3-6.

3. Battery Down Check

Mode	Camera record
Subject	Arbitrary

Connection

1) Connect the regulated power supply and the digital voltmeter as shown in Fig. 7-3-5.

Checking method:

Remove the adjusting remote commander, and perform the following check. If the check is not satisfied, perform from the beginning again.

1) Adjust the output voltage of the regulated power supply so that the digital voltmeter display becomes 6.3 ± 0.1 Vdc.
2) Set to the camera recording mode.
3) Check that the (X) mark on the EVF (viewfinder) display is not lighted up. (TALLY lamp lights up).
4) Decrease the the output voltage of the regulated power supply so that the digital voltmeter display becomes 5.54 ± 0.01 Vdc.
5) Check that the (X) mark on the EVF display and the TALLY lamp blinks every second.
6) Decrease the the output voltage of the regulated power supply so that the digital voltmeter display becomes 5.42 ± 0.01 Vdc.
7) Check that the (X) mark on the EVF display and the TALLY lamp are blinking faster, the VTR stops and the power supply turns off.

3-4. SERVO SYSTEM ADJUSTMENTS

1. Switching Position Adjustment (VB board)

Switching timing of video head setting. If deviated in this case causes switching noise or jitter on the played back screen.

Mode	Playback
Signal	Alignment tape: For tracking adjustment (WR5-1NP)
Measurement Point	CH1: Pin Ⓐ of CN101 (RF SWP) CH2: Pin Ⓑ of CN101 (PB RF)
Measuring Instrument	Oscilloscope
Adjustment Page	D
Adjustment Address	04 (SW POSITION) (LOW) 05 (SW POSITION) (HIGH)
Specified Value	t1=0 ± 10 μsec

Adjusting method:

1) Page: 1, address: 00, data: 01
2) Set data: 0B to page: D, address: 05.
3) Change the data of page: D, address: 05 and minimize "t1". (Coarse adjustment)
4) Change the data of page: D, address: 04, and adjust so that the switching position (t1) becomes the specified value. (Fine adjustment)
5) Press the PAUSE button of the adjusting remote commander.

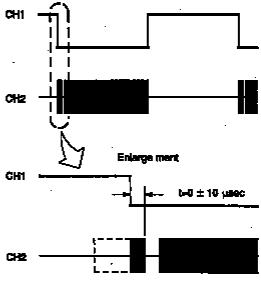

Fig. 7-3-8.

3-5. Standard 8 mm VIDEO SYSTEM ADJUSTMENTS (CCD-TR42/TR70/TR72/TR80/TR82/TR430/TR550)

The adjustments of the video system must be performed according to the following adjustment procedure.
The color video signal supplied from the pattern generator is used as the video input signal for adjusting the video system in recording mode. Check that the sync signal and the color burst signal satisfy the specification specified during the adjustment set-up shown in Figs. 7-3-2. and 7-3-3.

[Adjusting procedure]

1) Playback frequency characteristics adjustment
2) Flying erase check
3) VXO oscillation frequency check
4) SYNC AGC level adjustment
5) Comb filter adjustment
6) Emphasis input level adjustment
7) WHITE CLIP check
8) DARK CLIP check
9) DE EMPH level adjustment
10) PB Y out level adjustment
11) Y FM carrier frequency adjustment
12) Y FM deviation adjustment
13) Chroma emphasis adjustment 1
14) Chroma emphasis adjustment 2
15) Comb filter fine adjustment
16) REC Y level adjustment
17) REC L adjustment
18) REC CHROMA level adjustment
19) REC ATF level check

1. Playback Frequency Characteristic Adjustment (VS board)

Eliminate the differences in the head characteristics of each channel. If there are differences, flickers and over modulation noises will be produced.

Note 1: The adjusting element for CH2 is shown in parentheses [ ].

Mode	Playback
Signal	Alignment tape: For frequency characteristic adjustment (WR5-6N)
Measurement Point	CH1: Pin ③ of CN102 (PB RF) EXT TRIG: Pin ④ of CN102 (RF SWP)
Measuring Instrument	Oscilloscope TRIG SLOPE: +, [–]
Adjustment Page	D
Adjustment Address	5E (MT 1CH (L)), [63 (MT 2CH (L))]
Specified Value	3.58 MHz level: 5.5 MHz level= 4: (3 ± 0.3)

Adjusting method:

1) Page: 1, address: 00, data: 01
2) After memorizing the data of page: D, address: 05, set data: 1A.
3) Press the PAUSE button of the adjusting remote commander.
4) Change the data of address: 5E [63] of page D, and adjust the level ratio of 3.58 MHz and 5.5 MHz of PB RF output waveform to the specified value.
   Note 2: After each address adjustment, be sure to press the PAUSE button of the adjusting remote commander and memorize the data.
5) Set the data memorized at step 2) to page: D, address: 05, and press the PAUSE button of the adjusting remote commander.

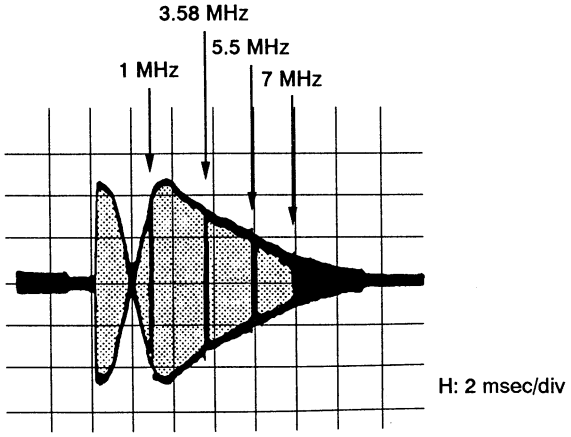

Fig. 7-3-7.

3-5. Standard 8 mm VIDEO SYSTEM ADJUSTMENTS (CCD-TR42/TR70/TR72/TR80/TR82/TR430/TR550)

The adjustments of the video system must be performed according to the following adjustment procedure.
The color video signal supplied from the pattern generator is used as the video input signal for adjusting the video system in recording mode. Check that the sync signal and the color burst signal satisfy the specification specified during the adjustment set-up shown in Figs. 7-3-2. and 7-3-3.

[Adjusting procedure]

1) Playback frequency characteristics adjustment
2) Flying erase check
3) VXO oscillation frequency check
4) SYNC AGC level adjustment
5) Comb filter adjustment
6) Emphasis input level adjustment
7) WHITE CLIP check
8) DARK CLIP check
9) DE EMPH level adjustment
10) PB Y out level adjustment
11) Y FM carrier frequency adjustment
12) Y FM deviation adjustment
13) Chroma emphasis adjustment 1
14) Chroma emphasis adjustment 2
15) Comb filter fine adjustment
16) REC Y level adjustment
17) REC L adjustment
18) REC CHROMA level adjustment
19) REC ATF level check

1. Playback Frequency Characteristic Adjustment (VS board)

Eliminate the differences in the head characteristics of each channel. If there are differences, flickers and over modulation noises will be produced.

Note 1: The adjusting element for CH2 is shown in parentheses [ ].

Mode	Playback
Signal	Alignment tape: For frequency characteristic adjustment (WRS-6N)
Measurement Point	CH1: Pin ③ of CN102 (PB RF) EXT TRIG: Pin ④ of CN102 (RF SWP)
Measuring Instrument	Oscilloscope TRIG SLOPE: +, [–]
Adjustment Page	D
Adjustment Address	5E (MT 1CH (L-)), [63 (MT 2CH (L-))]
Specified Value	3.58 MHz level: 5.5 MHz level= 4: (3 ± 0.3)

Adjusting method:

1) Page: 1, address: 00, data: 01
2) After memorizing the data of page: D, address: 05, set data: 1A.
3) Press the PAUSE button of the adjusting remote commander.
4) Change the data of address: 5B [63] of page D, and adjust the level ratio of 3.58 MHz and 5.5 MHz of PB RF output waveform to the specified value.
   Note 2: After each address adjustment, be sure to press the PAUSE button of the adjusting remote commander and memorize the data.
5) Set the data memorized at step 2) to page: D, address: 05, and press the PAUSE button of the adjusting remote commander.

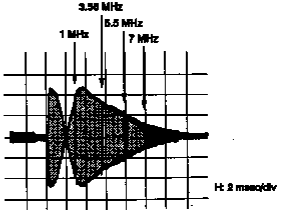

Fig. 7-3-7.

2. Flying Erase Check (VS board)

Mode	Record
Signal	Arbitrary
Measurement Point	Pin ⑫ of CN101 (FE (X))
Measuring Instrument	Oscilloscope and frequency counter
Specified Value	Frequency: 8.0 ± 0.5 MHz Voltage: 6.0 ± 1 Vp-p (ME tape) Above 7.0 Vp-p (MP tape)

Checking method:

1) Check that the oscillation frequency and the oscillation voltage satisfieds the specified value.

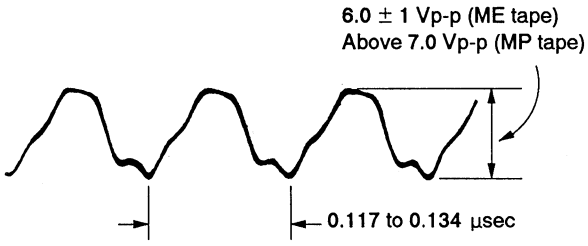

Fig. 7-3-8.

3. VXO Oscillation Frequency Check (VS board)

Mode	Record
Signal	Color bar
Measurement Point	Pin ⑥① of IC201
Measuring Instrument	Frequency counter
Specified Value	3579545 ± 50 Hz

Note: Connect the frequency counter via a high impedance (approximately 10 MΩ) and low capacity (below 10 pF) buffer.

Adjusting method:

1) Check that the oscillation frequency of pin ⑥① of IC201 is 3579545 ± 50 Hz.

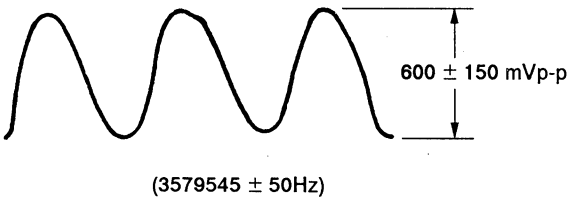

Fig. 7-3-9.

4. SYNC AGC Level Adjustment (VS board)

Adjust so that the Y signal level to be recorded becomes consistent. If it is not consistent, the camera EE image and OA image will be brighter or darker than normal.

Mode	Camera record
Signal	Color bar (Camera input) Note 1
Measurement Point	Pin ⑥ of CN201 (VIDEO I/O) Note 2
Measuring Instrument	Oscilloscope
Adjustment Page	D
Adjustment Address	70 (SYNC AGC)
Specified Value	A=1.00 ± 0.025V

Note 1: The chroma signal input is not required.
Note 2: Terminate the video out terminal at 75Ω .
75Ω resistor (Part code: 1-247-804-11)

Adjusting method:

1) Page: 1, address: 00, data: 01
2) Change the data of page: D, address: 70, and adjust so that the Y signal level (A) becomes the specified value.
3) Press the PAUSE button of the adjusting remote commander.

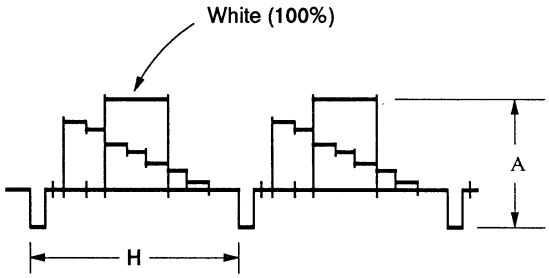

Fig. 7-3-10.

2. Flying Erase Check (VS board)

Mode	Record
Signal	Arbitrary
Measurement Point	Pin ⑥ of CN101 (FE (X))
Measuring Instrument	Oscilloscope and frequency counter
Specified Value	Frequency: 8.0 ± 0.5 MHz Voltage: 6.0 ± 1 Vp-p (ME tape) Above 7.0 Vp-p (MP tape)

Checking method:

1) Check that the oscillation frequency and the oscillation voltage satisfieds the specified value.

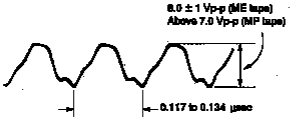

Fig. 7-3-8.

3. VXO Oscillation Frequency Check (VS board)

Mode	Record
Signal	Color bar
Measurement Point	Pin ⑧ of IC201
Measuring Instrument	Frequency counter
Specified Value	3579545 ± 50 Hz

Note: Connect the frequency counter via a high impedance (approximately 10 MΩ) and low capacity (below 10 pF) buffer.

Adjusting method:

1) Check that the oscillation frequency of pin ⑧ of IC201 is 3579545 ± 50 Hz.

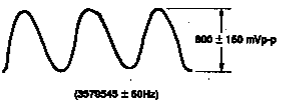

Fig. 7-3-9.

4. SYNC AGC Level Adjustment (VS board)

Adjust so that the Y signal level to be recorded becomes consistent. If it is not consistent, the camera EE image and OA image will be brighter or darker than normal.

Mode	Camera record
Signal	Color bar (Camera input) Note 1
Measurement Point	Pin ⑤ of CN201 (VIDEO I/O) Note 2
Measuring Instrument	Oscilloscope
Adjustment Page	D
Adjustment Address	70 (SYNC AGC)
Specified Value	A=1.00 ± 0.025V

Note 1: The chroma signal input is not required.
Note 2: Terminate the video out terminal at 75Ω .
75Ω resistor (Part code: 1-247-804-11)

Adjusting method:

1) Page: 1, address: 00, data: 01
2) Change the data of page: D, address: 70, and adjust so that the Y signal level (A) becomes the specified value.
3) Press the PAUSE button of the adjusting remote commander.

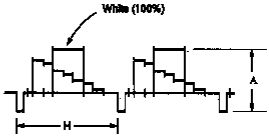

Fig. 7-3-10.

5. Comb Filter Adjustment (VS board)

Set the level and phase of the 1H delayed signal for the comb filter.

Mode	Camera record
Signal	Color bar (Note 1)
Measurement Point	Pin ⑭ of IC201 (Y COMB OUT)
Measuring Instrument	Oscilloscope
Adjusting Element	RV202 (PHASE)
Adjustment Page	D
Adjustment Address	71 (COMB ADJ)
Specified Value	Residual chroma component (A) is minimum.

Note 1: Connect the pattern generator as shown in the following figure.

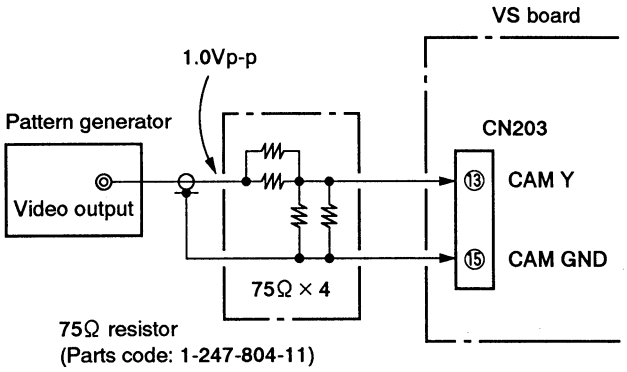

Adjusting method:

1) Set to the VIDEO input mode.
2) Set to the record mode.
3) Page: 1, address: 00, data: 01
4) Set data: 00 to page: 2, address: 00.
   (Specification of category 00)
5) Set data: 04 to page: 2, address: B0.
6) After memorizing the data of address: 9A of page: 2, set data: 10 to the address. (TEST A mode setting)
7) After memorizing the data of address: 9D of page: 2, set data: 30 to the address. (TEST B mode setting)
8) Change the data of page: D, address: 71, and adjust the residual chroma component (A) to minimum.
9) Adjust RV202 so that the residual chroma component becames minimum.
10) Repeat 8) and 9).
11) Press the PAUSE button of the adjusting remote commander.

Processing after completing adjustments

1) Set the data memorized at step 7) to address: 9D of page: 2.
2) Set the data memorized at step 6) to address: 9A of page: 2.
3) Set data: 00 to page: 2, address: B0.
   (Release of TEST A, B mode)

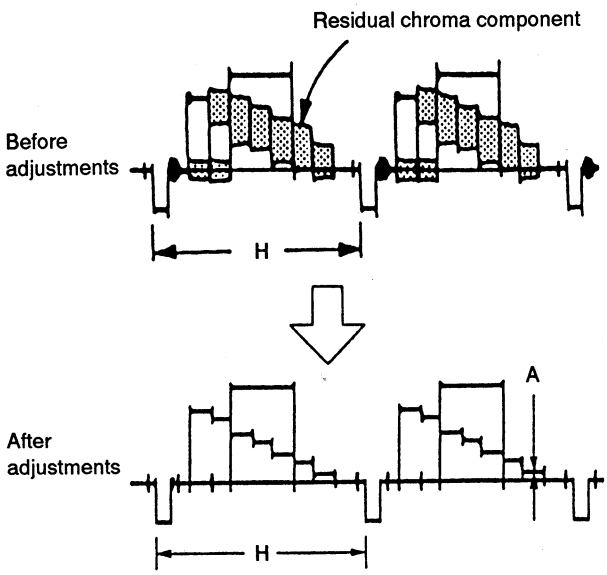

Fig. 7-3-11.

5. Comb Filter Adjustment (V8 board)

Set the level and phase of the 1H delayed signal for the comb filter.

Mode	Camera record
Signal	Color bar (Note 1)
Measurement Point	Pin ⑭ of IC201 (Y COMB OUT)
Measuring Instrument	Oscilloscope
Adjusting Element	RV202 (PHASE)
Adjustment Page	D
Adjustment Address	71 (COMB ADJ)
Specified Value	Residual chroma component (A) is minimum.

Note 1: Connect the pattern generator as shown in the following figure.

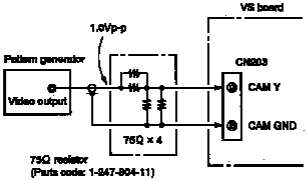

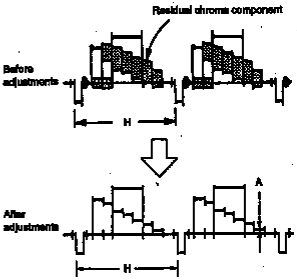

Fig. 7-3-11.

Adjusting method:

1) Set to the VIDEO input mode.
2) Set to the record mode.
3) Page: 1, address: 00, data: 01
4) Set data: 00 to page: 2, address: 00.
   (Specification of category 00)
5) Set data: 04 to page: 2, address: B0.
6) After memorizing the data of address: 9A of page: 2, set data: 10 to the address. (TEST A mode setting)
7) After memorizing the data of address: 9D of page: 2, set data: 30 to the address. (TEST B mode setting)
8) Change the data of page: D, address: 71, and adjust the residual chroma component (A) to minimum.
9) Adjust RV202 so that the residual chroma component becomes minimum.
10) Repeat 8) and 9).
11) Press the PAUSE button of the adjusting remote commander.

Processing after completing adjustments

1) Set the data memorized at step 7) to address: 9D of page: 2.
2) Set the data memorized at step 6) to address: 9A of page: 2.
3) Set data: 00 to page: 2, address: B0.
   (Release of TEST A, B mode)

6. Emphasis Input Level Adjustment (VS board)

Y level of emphasis circuit setting. If deviated, this causes too bright or too dark image during play back after recording.

Mode	Camera record
Signal	Color bar (CAMERA input)
Measurement Point	Pin ⑤ of IC201 (EMPH IN) or Pin ⑤ of IC205
Measuring Instrument	Oscilloscope
Adjustment Page	D
Adjustment Address	82 (EMPH (EE))
Specified Value	A=0.50 ± 0.01V

Note 1: The chroma signal input is not required.

Adjusting method:

1) Page: 1, address: 00, data: 01
2) Change the data of page: D, address: 82, and adjust so that the Y signal level (A) becomes the specified value.
3) Press the PAUSE button of the adjusting remote commander.

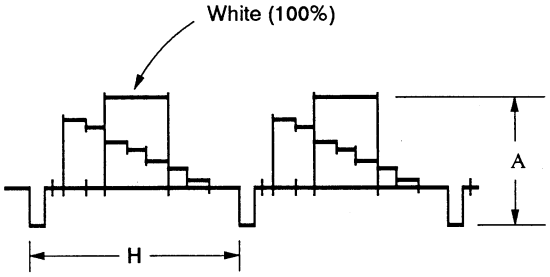

Fig. 7-3-12.

7. WHITE CLIP check (VS board)

Mode	Camera record
Signal	Color bar (CAMERA input)
Measurement Point	Pin ㊴ of IC201 (Y RF OUT)
Measuring Instrument	Oscilloscope
Adjustment Page	D
Adjustment Address	MP tape: 7B (W CLIP (SP L MP)) ME tape: 7A (W CLIP (SP L ME))
Specified Value	A=220 ± 10%

Note 1: The data of address 7B and 7A are fixed value. (The data of address 7B and 7A are "86".)

Note 2: The chroma signal input is not required.

Checking method:

1) Set to the record mode.
2) Set data: 00 to page: 2, address: 00. (Specification of category 00)
3) Set data: 04 to page: 2, address: B0.
4) After memorizing the data of address: 9A of page: 2, set data: 01 to the address. (TEST 2 mode setting)
5) Check that the white clip level (A) satisfies the specified value.

Processing after completing adjustments

1) Set the data memorized at step 4) to address: 9A of page: 2.
2) Set data: 00 to page: 2, address: B0. (Release of TEST 2 mode)

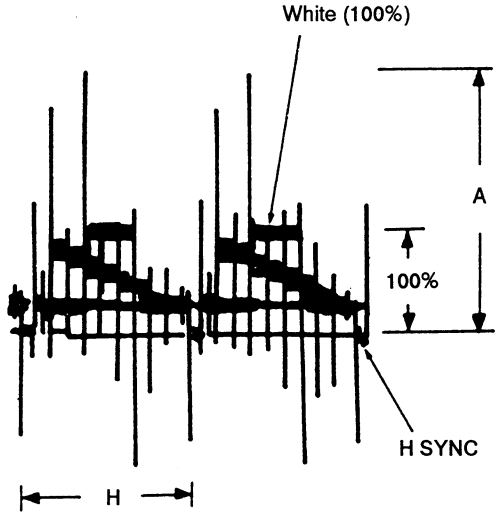

Fig. 7-3-13.

6. Emphasis Input Level Adjustment (V5 board)

Y level of emphasis circuit setting. If deviated, this causes too bright or too dark image during play back after recording.

Mode	Camera record
Signal	Color bar (CAMERA input)
Measurement Point	Pin ⑯ of IC201 (EMPH IN) or Pin ⑥ of IC205
Measuring Instrument	Oscilloscope
Adjustment Page	D
Adjustment Address	82 (EMPH (EE))
Specified Value	A=0.50 ± 0.01V

Note 1: The chroma signal input is not required.

Adjusting method:

1) Page: 1, address: 00, data: 01
2) Change the data of page: D, address: 82, and adjust so that the Y signal level (A) becomes the specified value.
3) Press the PAUSE button of the adjusting remote commander.

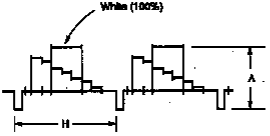

Fig. 7-3-12.

7. WHITE CLIP check (V3 board)

Mode	Camera record
Signal	Color bar (CAMERA input)
Measurement Point	Pin ⑯ of IC201 (Y RF OUT)
Measuring Instrument	Oscilloscope
Adjustment Page	D
Adjustment Address	MP tape: 7B (W CLIP (SP L MP)) ME tape: 7A (W CLIP (SP L ME))
Specified Value	A=220 ± 10%

Note 1: The data of address 7B and 7A are fixed value. (The data of address 7B and 7A are "86".)

Note 2: The chroma signal input is not required.

Checking method:

1) Set to the record mode.
2) Set data: 00 to page: 2, address: 00. (Specification of category 00)
3) Set data: 04 to page: 2, address: B0.
4) After memorizing the data of address: 9A of page: 2, set data: 01 to the address. (TEST 2 mode setting)
5) Check that the white clip level (A) satisfies the specified value.

Processing after completing adjustments

1) Set the data memorized at step 4) to address: 9A of page: 2.
2) Set data: 00 to page: 2, address: B0. (Release of TEST 2 mode)

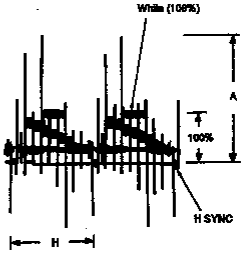

Fig. 7-3-13.

8. DARK CLIP check (VS board)

Mode	Camera record
Signal	Color bar (CAMERA input)
Measurement Point	Pin ㊴ of IC201 (Y RF OUT)
Measuring Instrument	Oscilloscope
Adjustment Page	D
Adjustment Address	24 (D CLIP 1) 25 (D CLIP 2)
Specified Value	A=100 ± 10%

Note 1: The data of address 24 and 25 are fixed value.
(The data of address 24 and 25 are "00".)
Note 2: The chroma signal input is not required.
Note 3: The chroma signal input is not required.

Checking method:
1) Set to the record mode.
2) Set data: 00 to page: 2, address: 00.
(Specification of category 00)
3) Set data: 04 to page: 2, address: B0.
4) After memorizing the data of address: 9A of page: 2, set data: 01 to the address. (TEST 2 mode setting)
5) Check that the dark clip level (A) satisfies the specified value.

Processing after completing adjustments
1) Set the data memorized at step 4) to address: 9A of page: 2.
2) Set data: 00 to page: 2, address: B0.
(Release of TEST 2 mode)

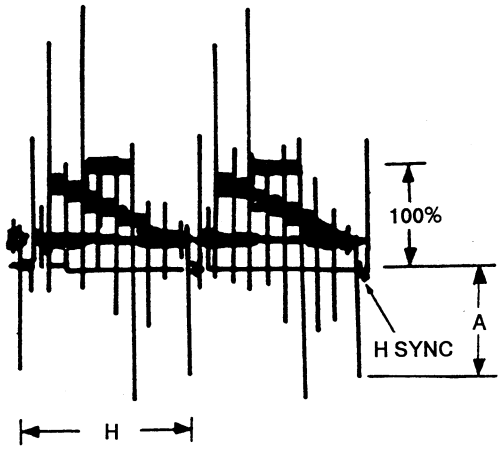

Fig. 7-3-14.

9. DE EMPH Level Adjustment (VS board)

De-emphasis input level setting. If deviated, this causes excessive brightness or darkness.

Mode	Playback
Signal	Alignment tape: For checking operations Color bar section (WR5-5NSP)
Measurement Point	Pin ㉓ of IC201 (DL IN 1)
Measuring Instrument	Oscilloscope
Adjustment Page	D
Adjustment Address	87 (DE-EMPH (PB L))
Specified Value	A=0.54 ± 0.01V

Adjusting method:
1) Page: 1, address: 00, data: 01
2) Change the data of page: D, address: 87, and adjust so that the Y signal level (A) becomes the specified value.
3) Press the PAUSE button of the adjusting remote commander.
4) Perform "PB Y OUT Level Adjustment".

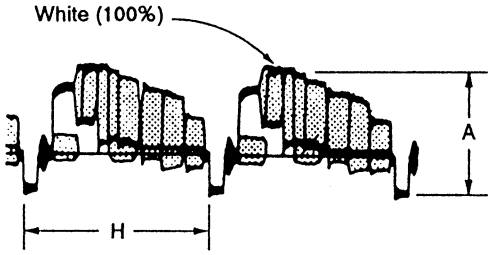

Fig. 7-3-15.

8. DARK CLIP check (V5 board)

Mode	Camera record
Signal	Color bar (CAMERA input)
Measurement Point	Pin ⑨ of IC201 (Y RF OUT)
Measuring Instrument	Oscilloscope
Adjustment Page	D
Adjustment Address	24 (D CLIP 1) 25 (D CLIP 2)
Specified Value	A=100 ± 10%

Note 1: The data of address 24 and 25 are fixed value. (The data of address 24 and 25 are "00".)
Note 2: The chroma signal input is not required.
Note 3: The chroma signal input is not required.

Checking method:
1) Set to the record mode.
2) Set data: 00 in page: 2, address: 00. (Specification of category 00)
3) Set data: 04 to page: 2, address: B0.
4) After memorizing the data of address: 9A of page: 2, set data: 01 to the address. (TEST 2 mode setting)
5) Check that the dark clip level (A) satisfies the specified value.

Processing after completing adjustments
1) Set the data memorized at step 4) to address: 9A of page: 2.
2) Set data: 00 to page: 2, address: B0. (Release of TEST 2 mode)

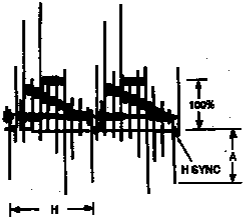

Fig. 7-3-14.

9. DE EMPH Level Adjustment (V5 board)

De-emphasis input level setting. If deviated, this causes excessive brightness or darkness.

Mode	Playback
Signal	Alignment tape: For checking operations Color bar section (WR5-5NSP)
Measurement Point	Pin ⑨ of IC201 (DL IN 1)
Measuring Instrument	Oscilloscope
Adjustment Page	D
Adjustment Address	87 (DE-EMPH (PB L))
Specified Value	A=0.54 ± 0.01V

Adjusting method:
1) Page: 1, address: 00, data: 01
2) Change the data of page: D, address: 87, and adjust so that the Y signal level (A) becomes the specified value.
3) Press the PAUSE button of the adjusting remote commander.
4) Perform "PB Y OUT Level Adjustment".

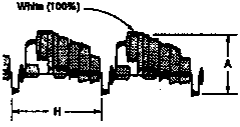

Fig. 7-3-15.

10. PB Y OUT Level Adjustment

PB LINE OUT Y level setting. If deviated, this causes too bright or too dark picture.

Mode	Playback
Signal	Alignment tape: For checking operations (WR5-5NSP) Color bar section
Measurement Point	Pin ⑥ of CN201 (VIDEO I/O)
Measuring Instrument	Oscilloscope
Adjustment Page	D
Adjustment Address	83 (EMPH (PB))
Specified Value	A=1.0 ± 0.05V

Note 1: Terminate the video output/output terminal at 75Ω .
75Ω resistor (Part code: 1-247-804-11)

Adjusting method:

1) Page: 1, address: 00, data: 01
2) Change the data of page: D, address: 83, and adjust so that the video signal level (A) becomes the specified value.
3) Press the PAUSE button of the adjusting remote commander.

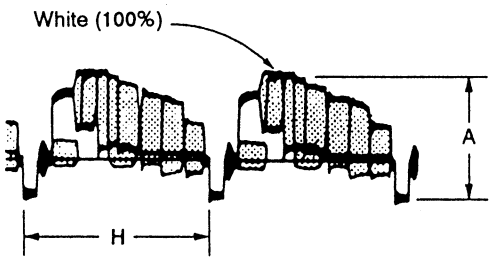

Fig. 7-3-16.

11. Y FM Carrier Frequency Adjustment (VS board)

FM carrier frequency of REC Y setting. If deviated, this caused blurred played back picture or deteriorated resolution.

Mode	Record
Signal	No signal (CAMERA input)
Measurement Point	Pin ㊴ of IC201 (Y RF OUT) (JL209)
Measuring Instrument	Frequency counter
Adjustment Page	D
Adjustment Address	75 (CARRIER (L))
Specified Value	4.385 ± 0.01 MHz

Adjusting method:

1) Page: 1, address: 00, data: 01
2) Change the data of page: D, address: 75, and adjust so that the Y FM carrier frequency becomes the specified value.
3) Press the PAUSE button of the adjusting remote commander.

Fig. 7-3-17.

10. PB Y OUT Level Adjustment

PB LINE OUT Y level setting. If deviated, this causes too bright or too dark picture.

Mode	Playback
Signal	Alignment tape: For checking operations (WRS-SNSP) Color bar section
Measurement Point	Pin ⑧ of CN201 (VIDEO I/O)
Measuring Instrument	Oscilloscope
Adjustment Page	D
Adjustment Address	83 (EMPH (PB))
Specified Value	A=1.0 ± 0.05V

Note 1: Terminate the video output/output terminal at 75Ω . 75Ω resistor (Part code: 1-247-804-11)

Adjusting method:

1) Page: 1, address: 00, data: 01
2) Change the data of page: D, address: 83, and adjust so that the video signal level (A) becomes the specified value.
3) Press the PAUSE button of the adjusting remote commander.

Fig. 7-3-16.

11. Y FM Carrier Frequency Adjustment (V8 board)

FM carrier frequency of REC Y setting. If deviated, this caused blurred played back picture or deteriorated resolution.

Mode	Record
Signal	No signal (CAMERA input)
Measurement Point	Pin ⑧ of IC201 (Y RF OUT) (JL209)
Measuring Instrument	Frequency counter
Adjustment Page	D
Adjustment Address	75 (CARRIER (L))
Specified Value	4.385 ± 0.01 MHz

Adjusting method:

1) Page: 1, address: 00, data: 01
2) Change the data of page: D, address: 75, and adjust so that the Y FM carrier frequency becomes the specified value.
3) Press the PAUSE button of the adjusting remote commander.

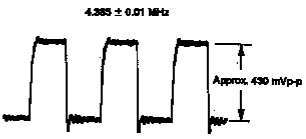

Fig. 7-3-17.

12. Y FM Deviation Adjustment (VS board)

FM deviation of REC Y setting. If deviated, this causes too bright/dark image, or marked occurrence of black picture or deteriorated resolution.

Mode	Record and playback
Signal	Color bar (CAMERA input)
Measurement Point	Pin ㉓ of IC201 (DL IN 1)
Measuring Instrument	Oscilloscope
Adjustment Page	D
Adjustment Address	77 (DEVIATION (L))
Specified Value	A=0.54 ± 0.01V

Note 1: Check that "Emphasis Input Level Adjustment", have been completed.

Note 2: The chroma signal input is not required.

Adjusting method:

1) Page: 1, address: 00, data: 01
2) Record the color bar signal.
3) Playback the recorded signal.
4) Check the playback signal level (A).
   Specification:A=0.54 ± 0.01V
5) If the specification is not satisfied, change the data of page: D, address: 77, and repeat steps 2) to 4).

Playback signal level	Changing the data
When smaller than the specified value	Increase
When bigger than the specified value	Decrease

6) Press the PAUSE button of the adjusting remote commander.
7) Perform "Y FM Carrier Frequency Adjustment".

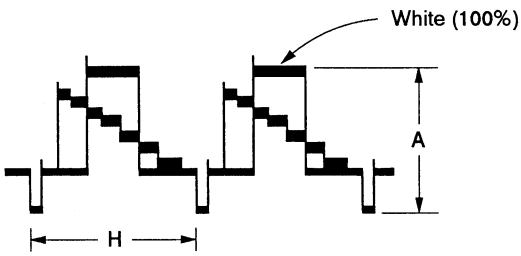

Fig. 7-3-18.

13. Chroma Emphasis Adjustment 1 (VS board)

Emphasis center frequency setting. If deviated, this causes unnatural color.

Mode	Record
Signal	Color bar (CAMERA input)
Measurement Point	Pin ⑧ of IC201 (REC C OUT)
Measuring Instrument	Oscilloscope
Adjustment Page	D
Adjustment Address	80 (C EMPH (EE)) 81 (C EMPH (PB))
Specified Value	Minimum fo component

Adjusting method:

1) Set to the record mode.
2) Page: 1, address: 00, data: 01
3) Set data: 00 to page: 2, address: 00.
   (Specification of category 00)
4) Set data: 04 to page: 2, address: B0.
5) After memorizing the data of address: 9A of page: 2, set data: 02 to the address. (TEST 1 mode setting)
6) Change the data of page: D, address: 80, and adjust so that the amplitude of the latter section of the chroma signal (yellow section) becames minimum.
7) Press the PAUSE button of the adjusting remote commander.
8) Set the same data as address: 80 of page: D to address: 81 of page D.
9) Press the PAUSE button of the adjusting remote commander.

Processing after completing adjustments

1) Set the data memorized at step 5) to address: 9A of page: 2.
2) Set data: 00 to page: 2, address: B0.
   (Release of TEST 1 mode)

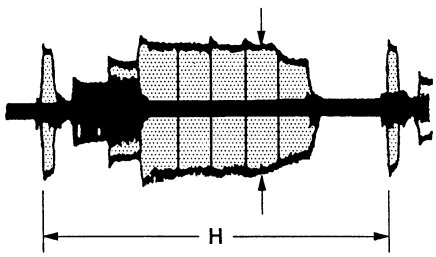

Fig. 7-3-19.

12. Y FM Deviation Adjustment (VB board)

FM deviation of REC Y setting. If deviated, this causes too bright/dark image, or marked occurrence of black picture or deteriorated resolution.

Mode	Record and playback
Signal	Color bar (CAMERA input)
Measurement Point	Pin ⑥ of IC201 (DL IN 1)
Measuring Instrument	Oscilloscope
Adjustment Page	D
Adjustment Address	77 (DEVIATION (L))
Specified Value	A=0.54 ± 0.01V

Note 1: Check that "Emphasis Input Level Adjustment", have been completed.

Note 2: The chroma signal input is not required.

Adjusting method:

1) Page: 1, address: 00, data: 01
2) Record the color bar signal.
3) Playback the recorded signal.
4) Check the playback signal level (A).
   Specification: A=0.54 ± 0.01V
5) If the specification is not satisfied, change the data of page: D, address: 77, and repeat steps 2) to 4).

Playback signal level	Changing the data
When smaller than the specified value	Increase
When bigger than the specified value	Decrease

6) Press the PAUSE button of the adjusting remote commander.
7) Perform "Y FM Carrier Frequency Adjustment".

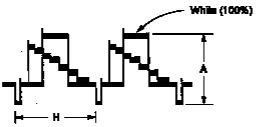

Fig. 7-3-18.

13. Chroma Emphasis Adjustment 1 (VB board)

Emphasis center frequency setting. If deviated, this causes unnatural color.

Mode	Record
Signal	Color bar (CAMERA input)
Measurement Point	Pin ⑥ of IC201 (REC C OUT)
Measuring Instrument	Oscilloscope
Adjustment Page	D
Adjustment Address	80 (C EMPH (EE)) 81 (C EMPH (PB))
Specified Value	Minimum fc component

Adjusting method:

1) Set to the record mode.
2) Page: 1, address: 00, data: 01
3) Set data: 00 to page: 2, address: 00.
   (Specification of category 00)
4) Set data: 04 to page: 2, address: B0.
5) After memorizing the data of address: 9A of page: 2, set data: 02 to the address. (TEST 1 mode setting)
6) Change the data of page: D, address: 80, and adjust so that the amplitude of the latter section of the chroma signal (yellow section) becomes minimum.
7) Press the PAUSE button of the adjusting remote commander.
8) Set the same data as address: 80 of page: D to address: 81 of page D.
9) Press the PAUSE button of the adjusting remote commander.

Processing after completing adjustments

1) Set the data memorized at step 5) to address: 9A of page: 2.
2) Set data: 00 to page: 2, address: B0.
   (Release of TEST 1 mode)

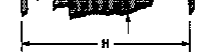

Fig. 7-3-19.

14. Chroma Emphasis Adjustment 2 (VS board)

Emphasis center frequency setting. If deviated, this causes unnatural color.

Mode	Playback
Signal	Alignment tape: For checking operations (WR5-5NSP) Color bar section
Measurement Point	Video output terminal
Measuring Instrument	Vectorscope
Adjustment Page	D
Adjustment Address	81 (C EMPH (PB)) 80 (C EMPH (EE))
Specified Value	The path from the blue luminance point to black luminance point should be a straight line.

Adjusting method:

1) Page: 1, address: 00, data: 01
2) Change the data of page: D, address: 81, and adjust so that the path from the blue luminance point to black luminance point becames a straight line.
3) Press the PAUSE button of the adjusting remote commander.
4) Set the same data as address: 81 of page: D to address: 80 of page: D.
5) Press PAUSE button of the adjusting remote commander.

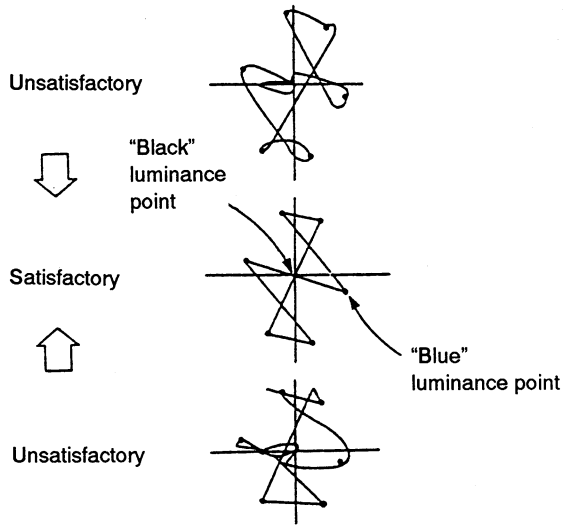

Fig. 7-3-20.

15. Comb Filter Fine Adjustment (VS board)

Set the level and phase of the 1H delayed signal for the comb filter. If deviated, this causes marked occurrence of beets in played back picture.

Mode	Playback
Signal	Alignment tape: For checking operations (WR5-5NSP) Color bar section
Measurement Point	Video output terminal
Measuring Instrument	Vectorscope
Adjusting Element	RV202 (PHASE)
Adjustment Page	D
Adjustment Address	71 (COMB ADJ)
Specified Value	Minimum color luminance point movement when the "Edit" switch is turned on/off

Note 1: Turn the edit ON/OFF at the menu screen.

Adjusting method:

1) Page: 1, address: 00, data: 01
2) Minimize the movements of the color luminance point when the edit is on/off with RV202.
3) Change the data of page: D, address: 71 and minimize the movements of the color luminance point when the edit is on/off
4) Press the PAUSE button of the adjusting remote commander.
5) Repeat steps 2) to 4).

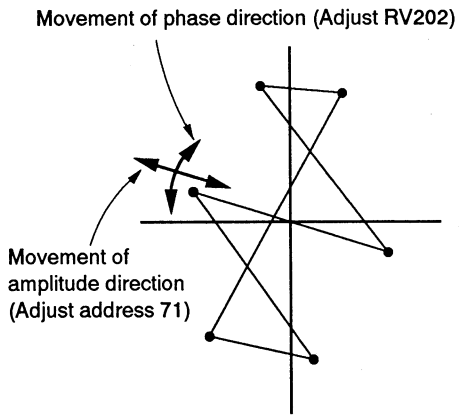

Fig. 7-3-21.

14. Chroma Emphasis Adjustment 2 (V8 board)

Emphasis center frequency setting. If deviated, this causes unnatural color.

Mode	Playback
Signal	Alignment tape: For checking operations (WR5-5NSP) Color bar section
Measurement Point	Video output terminal
Measuring Instrument	Vectorscope
Adjustment Page	D
Adjustment Address	81 (C EMPH (PB)) 80 (C EMPH (EE))
Specified Value	The path from the blue luminance point to black luminance point should be a straight line.

Adjusting method:

1) Page: 1, address: 00, data: 01
2) Change the data of page: D, address: 81, and adjust so that the path from the blue luminance point to black luminance point becomes a straight line.
3) Press the PAUSE button of the adjusting remote commander.
4) Set the same data as address: 81 of page: D to address: 80 of page: D.
5) Press PAUSE button of the adjusting remote commander.

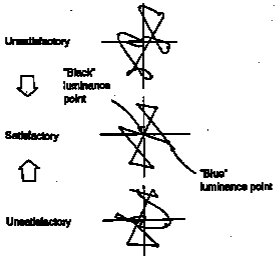

Fig. 7-3-20.

15. Comb Filter Fine Adjustment (V8 board)

Set the level and phase of the 1H delayed signal for the comb filter. If deviated, this causes marked occurrence of beats in played back picture.

Mode	Playback
Signal	Alignment tape: For checking operations (WR5-5NSP) Color bar section
Measurement Point	Video output terminal
Measuring Instrument	Vectorscope
Adjusting Element	RV202 (PHASE)
Adjustment Page	D
Adjustment Address	71 (COMB ADJ)
Specified Value	Minimum color luminance point movement when the "Edit" switch is turned on/off

Note 1: Turn the edit ON/OFF at the menu screen.

Adjusting method:

1) Page: 1, address: 00, data: 01
2) Minimize the movements of the color luminance point when the edit is on/off with RV202.
3) Change the data of page: D, address: 71 and minimize the movements of the color luminance point when the edit is on/off
4) Press the PAUSE button of the adjusting remote commander.
5) Repeat steps 2) to 4).

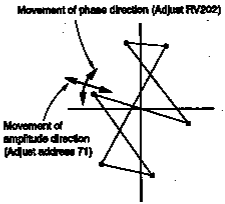

Fig. 7-3-21.

16. REC Y Level Adjustment (VS board)

Recording level of luminance signal setting. If deviated, this causes black stretch over modulation noise or color shade.

Mode	Record
Signal	No signal
Measurement Point	Pin ⑥ of CN102 (REC 2)
Measuring Instrument	Oscilloscope Board width limit: 20 MHz
Adjustment Page	D
Adjustment Address	47 (REC Y 2CH (L MP)) 43 (REC Y 1CH (L MP)) 46 (REC Y 2CH (L ME)) 42 (REC Y 1CH (L ME))
Specified Value	A=145 ± 5 mVp-p

Note 1: Use a normal MP type tape.

Adjusting method:

1) Page: 1, address: 00, data: 01
2) After memorizing the data of address: 3B of page: D, set data: FF to the address.
3) Set data: FF to address: 43 of page: D, and press the PAUSE button of the adjusting remote commander.
4) Change the data of page: D, address: 47, and adjust so that REC Y level (A) becomes the specified value.
5) Press the PAUSE button of the adjusting remote commander.
6) Set data to address: 42, 43, 46 of page: D as shown in following table.

   (Be sure to press the PAUSE button of the adjusting remote control unit after setting each data.)

Address	Data
42	Same data as address: 47
43	Same data as address: 47
46	Same data as address: 47

7) Set the data memorized at step 2) to address: 3B of page: D and press the PAUSE button of the adjusting remote commander.

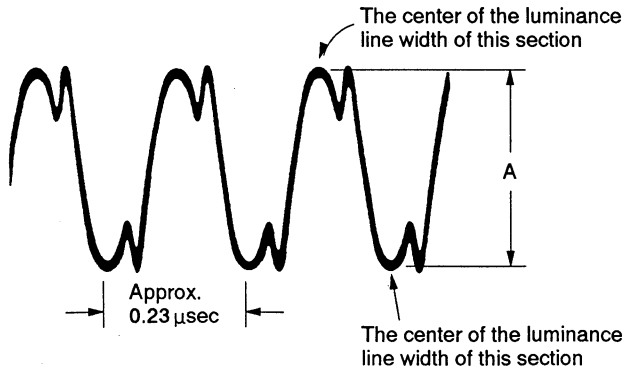

Fig. 7-3-22.

17. REC L Adjustment (VS board)

Set the recording levels of the REC AFM signal and REC ATF signal. If the level is too low, the audio S/N will deteriorate, tracking will not be stable, or SP/LP will not be discriminated properly. If too high, color beets will be produced on the self-recording/playback image.

Mode	Record
Signal	No signal (VIDEO input)
Measurement Point	Pin ⑥ of CN102 (REC 2)
Measuring Instrument	Oscilloscope
Adjustment Page	D
Adjustment Address	3B (REC LOW 2 (MP)) 39 (REC LOW 1 (MP)) 3A (REC LOW 2 (ME)) 38 (REC LOW 1 (ME))
Specified Value	A=6.7 ± 1.0 mVp-p

Note 1: Use a MP type tape.
Note 2: AU board is required for this adjustment.
Note 3: For CCD-TR72/TR80/TR430, do not insert any plug into the right audio input terminal.

Connection:

1) Connect Emitter of Q113 and GND with a jumper wire.
2) Connect Pin ⑤ of IC508 and GND with a 0.01 µF capacitor. (Parts cord: 1-101-004-00)

Adjusting method:

1) Page: 1, address: 00, data: 01
2) Change the data of page: D, address: 3B, and adjust so that the REC AFM signal level (A) becomes the specified value.
3) Press the PAUSE button of the adjusting remote commander.
4) Read the data of page: D, address: 3B, and set to D_{3B}.
5) Set data: D_{3B} to address: 39 of page D.
6) Press the PAUSE button of the adjusting remote commander.
7) Convert D_{3B} to decimal notation, and obtain D_{3B}'. (Refer to Table 7-1-3. "Hexadecimal notation-decimal notation conversion table")
8) Culculate D_{3A}' using following equation (decimal notation calculation).

   $D_{3A}'=D_{3B}'-7$
9) Convert D_{3A}' to hexadecimal notation, and obtain D_{3A}.
10) Set data: D_{3A} to address: 3A of page D.
11) Press the PAUSE button of the adjusting remote commander.
12) Set data: D_{3A} to address: 38 of page D.
13) Press the PAUSE button of the adjusting remote commander.
14) Perform "REC CHROMA Level Adjustment".

16. REC Y Level Adjustment (V8 board)

Recording level of luminance signal setting. If deviated, this causes black stretch over modulation noise or color shade.

Mode	Record
Signal	No signal
Measurement Point	Pin Ⓑ of CN102 (REC 2)
Measuring Instrument	Oscilloscope Board width limit: 20 MHz
Adjustment Page	D
Adjustment Address	47 (REC Y 2CH (L MP)) 43 (REC Y 1CH (L MP)) 46 (REC Y 2CH (L ME)) 42 (REC Y 1CH (L ME))
Specified Value	A=145 ± 5 mVp-p

Note 1: Use a normal MP type tape.

Adjusting method:

1) Page: 1, address: 00, data: 01
2) After memorizing the data of address: 3B of page: D, set data: FF to the address.
3) Set data: FF to address: 43 of page: D, and press the PAUSE button of the adjusting remote commander.
4) Change the data of page: D, address: 47, and adjust so that REC Y level (A) becomes the specified value.
5) Press the PAUSE button of the adjusting remote commander.
6) Set data to address: 42, 43, 46 of page: D as shown in following table.

(Be sure to press the PAUSE button of the adjusting remote control unit after setting each data.)

Address	Data
42	Same data as address: 47
43	Same data as address: 47
46	Same data as address: 47

7) Set the data memorized at step 2) to address: 3B of page: D and press the PAUSE button of the adjusting remote commander.

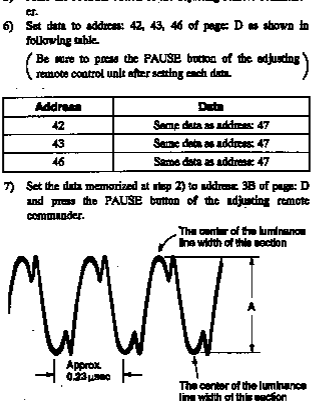

Fig. 7-3-22.

17. REC L Adjustment (V8 board)

Set the recording levels of the REC AFM signal and REC ATF signal. If the level is too low, the audio S/N will deteriorate, tracking will not be stable, or SP/LP will not be discriminated properly. If too high, color beats will be produced on the self-recording/playback image.

Mode	Record
Signal	No signal (VIDEO input)
Measurement Point	Pin Ⓑ of CN102 (REC 2)
Measuring Instrument	Oscilloscope
Adjustment Page	D
Adjustment Address	3B (REC LOW 2 (MP)) 39 (REC LOW 1 (MP)) 3A (REC LOW 2 (ME)) 38 (REC LOW 1 (ME))
Specified Value	A=6.7 ± 1.0 mVp-p

Note 1: Use a MP type tape.
Note 2: AU board is required for this adjustment.
Note 3: For CCD-TR72/TR80/TR430, do not insert any plug into the right audio input terminal.

Connection:

1) Connect Emitter of Q113 and GND with a jumper wire.
2) Connect Pin Ⓑ of IC508 and GND with a 0.01 μF capacitor. (Parts cord: 1-101-004-00)

Adjusting method:

1) Page: 1, address: 00, data: 01
2) Change the data of page: D, address: 3B, and adjust so that the REC AFM signal level (A) becomes the specified value.
3) Press the PAUSE button of the adjusting remote commander.
4) Read the data of page: D, address: 3B, and set to D_{3B}.
5) Set data: D_{39} to address: 39 of page D.
6) Press the PAUSE button of the adjusting remote commander.
7) Convert D_{3B} to decimal notation, and obtain D_{3B}'. (Refer to Table 7-1-3. "Hexadecimal notation-decimal notation conversion table")
8) Calculate D_{3A}' using following equation (decimal notation calculation).
   $D_{3A}' = D_{3B}' - 7$
9) Convert D_{3A}' to hexadecimal notation, and obtain D_{3A}.
10) Set data: D_{3A} to address: 3A of page D.
11) Press the PAUSE button of the adjusting remote commander.
12) Set data: D_{3A} to address: 38 of page D.
13) Press the PAUSE button of the adjusting remote commander.
14) Perform "REC CHROMA Level Adjustment".

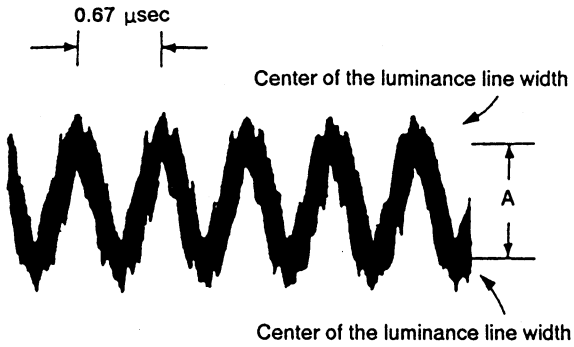

Fig. 7-3-23.

18. REC CHROMA Level Adjustment (VS board)

Set REC CHROMA signal level. If it is lower than its normal level, chroma signal noise in played back picture will increase. If it is set higher, Y signal noises will increase and white modulation noises will be prodused.

Mode	Record
Signal	Color bar (VIDEO input)
Measurement Point	Pin ⑥ of CN102 (REC 2)
Measuring Instrument	Oscilloscope
Adjustment Page	D
Adjustment Address	33 (REC C (SP L MP)) 32 (REC C (SP L ME)) 37 (REC C (LP L MP)) 36 (REC C (LP L ME))
Specified Value	A=29 ± 3 mVp-p

Note 1: Use a MP type tape.

Connection:

1) Connect Emitter of Q113 and GND with a jumper wire.
2) Connect Pin ⑤ of IC508 and GND with a 0.01 μF capacitor. (1-101-004-00)
3) Disconnect AU board.

Adjusting method:

1) Page: 1, address: 00, data: 01
2) Change the data of page: D, address: 33, and adjust so that the REC CHROMA signal level (A) becomes the specified value.
3) Press the PAUSE button of the adjusting remote commander.
4) Read the data of page: D, address: 33, and set to D_{33}.
5) Set data: D_{33} to address: 32 of page D.
6) Press the PAUSE button of the adjusting remote commander.
7) Set data: D_{33} to address: 36 of page D.
8) Press the PAUSE button of the adjusting remote commander.
9) Set data: D_{33} to address: 37 of page D.
10) Press the PAUSE button of the adjusting remote commander.

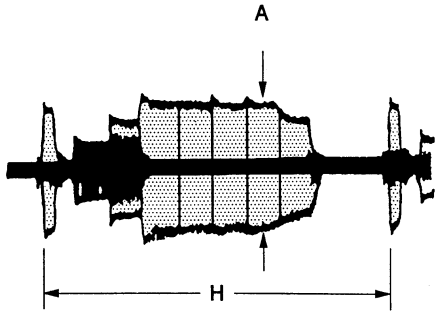

Fig. 7-3-24.

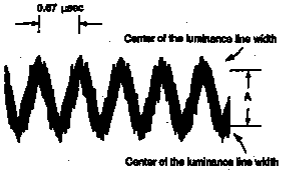

Fig. 7-3-23.

18. REC CHROMA Level Adjustment (VS board)

Set REC CHROMA signal level. If it is lower than its normal level, chroma signal noise is played back picture will increase. If it is set higher, Y signal noises will increase and white modulation noises will be produced.

Mode	Record
Signal	Color bar (VIDEO input)
Measurement Point	Pin Ⓑ of CN102 (REC 2)
Measuring Instrument	Oscilloscope
Adjustment Page	D
Adjustment Address	33 (REC C (SP L MP)) 32 (REC C (SP L ME)) 37 (REC C (LP L MP)) 36 (REC C (LP L ME))
Specified Value	A=29 ± 3 mVp-p

Note 1: Use a MP type tape.

Connection:

1) Connect Emitter of Q113 and GND with a jumper wire.
2) Connect Pin Ⓑ of IC508 and GND with a 0.01 μF capacitor. (1-101-004-00)
3) Disconnect AU board.

Adjusting method:

1) Page: 1, address: 00, data: 01
2) Change the data of page: D, address: 33, and adjust so that the REC CHROMA signal level (A) becomes the specified value.
3) Press the PAUSE button of the adjusting remote commander.
4) Read the data of page: D, address: 33, and set to D_{33}.
5) Set data: D_{33} to address: 32 of page D.
6) Press the PAUSE button of the adjusting remote commander.
7) Set data: D_{33} to address: 36 of page D.
8) Press the PAUSE button of the adjusting remote commander.
9) Set data: D_{33} to address: 37 of page D.
10) Press the PAUSE button of the adjusting remote commander.

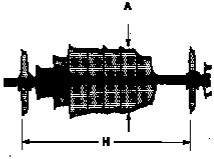

Fig. 7-3-24.

19. REC ATF Level Check (VS board)

Mode	Record
Signal	No signal
Measurement Point	Pin ⑥ of CN102 (REC 2)
Measuring Instrument	Oscilloscope
Specified Value	A=6.4 ± 1.5 mVp-p

Note 1: Use a MP type tape.

Connection:
1) Connect Emitter of Q113 and GND with a jumper wire.
2) Disconnect AU board.

Adjusting method:
1) Check that the REC ATF signal level (A) satisfise the specified value.

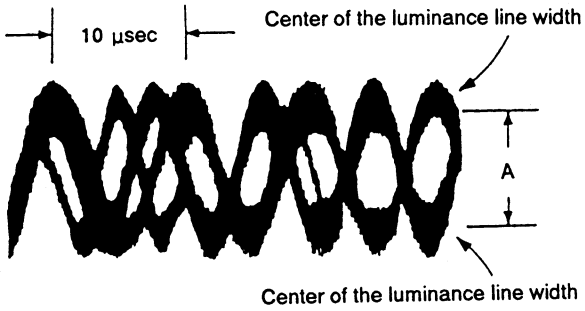

Fig. 7-3-25.

3-6. Hi8 VIDEO SYSTEM ADJUSTMENTS (CCD-TR400/TR750)

The adjustments of the video system must be performed according to the following adjustment procedure.
The color video signal supplied from the pattern generator is used as the video input signal for adjusting the video system in recording mode. Check that the sync signal and the color burst signal satisfy the specification specified during the adjustment set-up shown in Figs. 7-3-2. and 7-3-3.

[Adjusting procedure]

1) Playback frequency characteristics adjustment
2) Flying erase check
3) VXO oscillation frequency check
4) SYNC AGC level adjustment
5) Comb filter adjustment
6) Emphasis input level adjustment
7) WHITE CLIP check
8) DARK CLIP check
9) DE EMPH level adjustment
10) PB Y out level adjustment
11) Normal mode Y FM carrier frequency adjustment
12) Normal mode Y FM deviation adjustment
13) Hi8 mode Y FM carrier frequency adjustment
14) Hi8 mode Y FM deviation adjustment
15) Chroma emphasis adjustment 1
16) Chroma emphasis adjustment 2
17) Comb filter fine adjustment
18) REC Y level adjustment
19) REC L adjustment
20) REC CHROMA level adjustment
21) REC ATF level check

19. REC ATF Level Check (V8 board)

Mode	Record
Signal	No signal
Measurement Point	Pin ⑧ of CN102 (REC 2)
Measuring Instrument	Oscilloscope
Specified Value	A=6.4 ± 1.5 mVp-p

Note 1: Use a MP type tape.

Connection:

1) Connect Emitter of Q113 and GND with a jumper wire.
2) Disconnect AU board.

Adjusting method:

1) Check that the REC ATF signal level (A) satisfies the specified value.

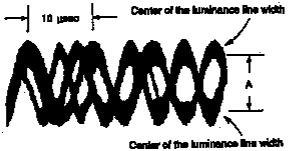

Fig. 7-3-25.

3-6. H8 VIDEO SYSTEM ADJUSTMENTS (CCD-TR400/TR750)

The adjustments of the video system must be performed according to the following adjustment procedure.
The color video signal supplied from the pattern generator is used as the video input signal for adjusting the video system in recording mode. Check that the sync signal and the color burst signal satisfy the specification specified during the adjustment set-up shown in Figs. 7-3-2. and 7-3-3.

[Adjusting procedure]

1) Playback frequency characteristics adjustment
2) Flying erase check
3) VXO oscillation frequency check
4) SYNC AGC level adjustment
5) Comb filter adjustment
6) Emphasis input level adjustment
7) WHITE CLIP check
8) DARK CLIP check
9) DE EMPH level adjustment
10) PB Y out level adjustment
11) Normal mode Y FM carrier frequency adjustment
12) Normal mode Y FM deviation adjustment
13) H8 mode Y FM carrier frequency adjustment
14) H8 mode Y FM deviation adjustment
15) Chroma emphasis adjustment 1
16) Chroma emphasis adjustment 2
17) Comb filter fine adjustment
18) REC Y level adjustment
19) REC L adjustment
20) REC CHROMA level adjustment
21) REC ATF level check

1. Playback Frequency Characteristic Adjustment (VS board)

Eliminate the differences in the head characteristics of each channel. If there are differences, flickers and over modulation noises will be produced.

Note 1: The adjusting element for CH2 is shown in parentheses [ ].

Mode	Playback
Signal	Alignment tape: For frequency characteristic adjustment (WR5-7NE)
Measurement Point	CH1: Pin ③ of CN102 (PB RF) EXT TRIG: Pin ④ of CN102 (RF SWP)
Measuring Instrument	Oscilloscope TRIG SLOPE: +, [–]
Adjustment Page	D
Adjustment Address	5A (MT 1CH (SP E ME)) 5B (MT 1CH (SP E MP)) 5C (MT 1CH (LP E ME)) 5D (MT 1CH (LP E MP)) 5E (MT 1CH (L)) [5F (MT 2CH (SP E ME)) 60 (MT 2CH (SP E MP)) 61 (MT 2CH (LP E ME)) 62 (MT 2CH (LP E MP)) 63 (MT 2CH (L))]
Specified Value	4.5 MHz level: 8.5 MHz level= 3: (2 ± 0.2)

Adjusting method:

1) Page: 1, address: 00, data: 01
2) Press the PAUSE button of the adjusting remote commander.
3) Change the data of address: 5A [5F] of page D, and adjust the level ratio of 4.5 MHz and 8.5 MHz of PB RF output waveform to the specified value.
   Note 2: After each address adjustment, be sure to press the PAUSE button of the adjusting remote commander and memorize the data.
4) Read the data of page: D, address: 5A, and set to D_{5A}.
5) Read the data of page: D, address: 5F, and set to D_{5F}.
6) Set data to address: 5B to 5E and 60 to 63 of page: D as shown in following table.
   (Be sure to press the PAUSE button of the adjusting remote commander after setting each data.)

Address	Data
5B	D_{5A}
5C	D_{5A}
5D	D_{5A}
5E	$D_{5A}+8$
60	D_{5F}
61	D_{5F}
62	D_{5F}
63	$D_{5F}+8$

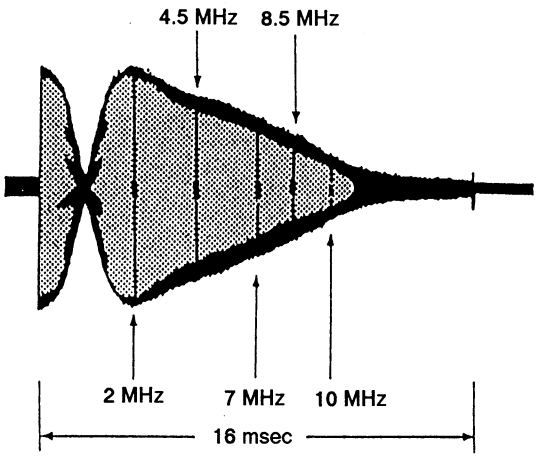

Fig. 7-3-26.

1. Playback Frequency Characteristic Adjustment (VS board)

Eliminate the differences in the head characteristics of each channel. If there are differences, flickers and over modulation noises will be produced.

Note 1: The adjusting element for CH2 is shown in parentheses [ ].

Mode	Playback
Signal	Alignment tape: For frequency characteristic adjustment (WR5-7NE)
Measurement Point	CH1: Pin ⑤ of CN102 (PB RF) EXT TRIG: Pin ④ of CN102 (RF SWP)
Measuring Instrument	Oscilloscope TRIG SLOPE: +, [–]
Adjustment Page	D
Adjustment Address	5A (MT 1CH (SP B ME)) 5B (MT 1CH (SP B MP)) 5C (MT 1CH (LP B ME)) 5D (MT 1CH (LP B MP)) 5E (MT 1CH (L)) [5F (MT 2CH (SP B ME)) 60 (MT 2CH (SP B MP)) 61 (MT 2CH (LP B ME)) 62 (MT 2CH (LP B MP)) 63 (MT 2CH (L))]
Specified Value	4.5 MHz level: 8.5 MHz level= 3: (2 ± 0.2)

Address	Data
5B	D_{5A}
5C	D_{5A}
5D	D_{5A}
5E	D_{5A+8}
60	D_{5F}
61	D_{5F}
62	D_{5F}
63	D_{5F+8}

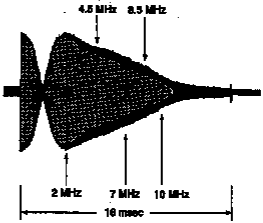

Fig. 7-3-26.

Adjusting method:

1) Page: 1, address: 00, data: 01
2) Press the PAUSE button of the adjusting remote commander.
3) Change the data of address: 5A [5F] of page: D, and adjust the level ratio of 4.5 MHz and 8.5 MHz of PB RF output waveform to the specified value.
   Note 2: After each address adjustment, be sure to press the PAUSE button of the adjusting remote commander and memorize the data.
4) Read the data of page: D, address: 5A, and set to D_{5A}.
5) Read the data of page: D, address: 5F, and set to D_{5F}.
6) Set data to address: 5B to 5E and 60 to 63 of page: D as shown in following table.
   (Be sure to press the PAUSE button of the adjusting remote commander after setting each data.)

2. Flying Erase Check (VS board)

Mode	Record
Signal	Arbitrary
Measurement Point	Pin ⑫ of CN101 (FE (X))
Measuring Instrument	Oscilloscope and frequency counter
Specified Value	Frequency: 8.0 ± 0.5 MHz Voltage: 6.0 ± 1 Vp-p (ME tape) Above 7.0 Vp-p (MP tape)

Checking method:

1) Check that the oscillation frequency and the oscillation voltage satisfieds the specified value.

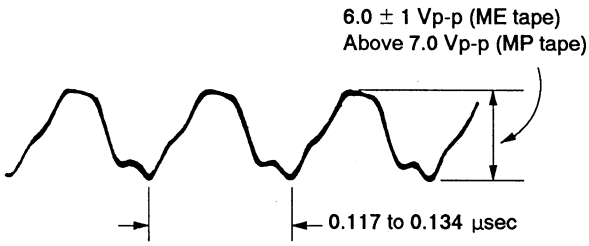

Fig. 7-3-27.

3. VXO Oscillation Frequency Check (VS board)

Mode	Record
Signal	Color bar
Measurement Point	Pin ⑥① of IC201
Measuring Instrument	Frequency counter
Specified Value	3579545 ± 50 Hz

Note: Connect the frequency counter via a high impedance (approximately 10 MΩ) and low capacity (below 10 pF) buffer.

Adjusting method:

1) Check that the oscillation frequency of pin ⑥ of IC201 is 3579545 ± 50 Hz.

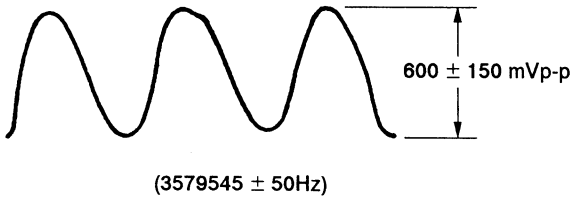

Fig. 7-3-28.

4. SYNC AGC Level Adjustment (VS board)

Adjust so that the Y signal level to be recorded becomes consistent. If it is not consistent, the camera EE image and OA image will be brighter or darker than normal.

Mode	Record
Signal	Color bar (Camera input) Note 1
Measurement Point	Pin ② of CN201 (Y IN/OUT) Note 2
Measuring Instrument	Oscilloscope
Adjustment Page	D
Adjustment Address	70 (SYNC AGC)
Specified Value	A=1.00 ± 0.025V

Note 1: The chroma signal input is not required.

Note 2: Connect Pin ② of CN201 and Pin ③ of CN201 (S-Y GND) with a 75Ω resistor.
75Ω resistor (Part code: 1-247-804-11)

Adjusting method:

1) Page: 1, address: 00, data: 01
2) Change the data of page: D, address: 70, and adjust so that the Y signal level (A) becomes the specified value.
3) Press the PAUSE button of the adjusting remote commander.

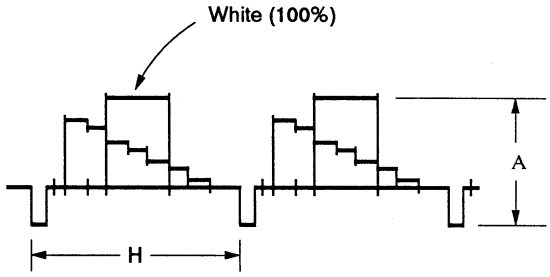

Fig. 7-3-29.

2. Flying Erase Check (VS board)

Mode	Record
Signal	Arbitrary
Measurement Point	Pin ⑫ of CN101 (PE (X))
Measuring Instrument	Oscilloscope and frequency counter
Specified Value	Frequency: 8.0 ± 0.5 MHz Voltage: 6.0 ± 1 Vp-p (ME tape) Above 7.0 Vp-p (MP tape)

Checking method:

1) Check that the oscillation frequency and the oscillation voltage satisfieds the specified value.

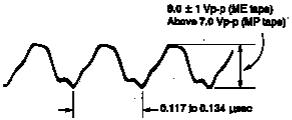

Fig. 7-3-27.

3. VXO Oscillation Frequency Check (VS board)

Mode	Record
Signal	Color bar
Measurement Point	Pin ⑥ of IC201
Measuring Instrument	Frequency counter
Specified Value	3579545 ± 50 Hz

Note: Connect the frequency counter via a high impedance (approximately 10 MΩ) and low capacity (below 10 pF) buffer.

Adjusting method:

1) Check that the oscillation frequency of pin ⑥ of IC201 is 3579545 ± 50 Hz.

(3579545 ± 50Hz)

Fig. 7-3-28.

4. SYNC AGC Level Adjustment (VS board)

Adjust so that the Y signal level to be recorded becomes consistent. If it is not consistent, the camera EE image and OA image will be brighter or darker than normal.

Mode	Record
Signal	Color bar (Camera input) Note 1
Measurement Point	Pin ② of CN201 (Y IN/OUT) Note 2
Measuring Instrument	Oscilloscope
Adjustment Page	D
Adjustment Address	70 (SYNC AGC)
Specified Value	A=1.00 ± 0.025V

Note 1: The chroma signal input is not required.

Note 2: Connect Pin ② of CN201 and Pin ③ of CN201 (S-Y GND) with a 75Ω resistor.
75Ω resistor (Part code: 1-247-804-11)

Adjusting method:

1) Page: 1, address: 00, data: 01
2) Change the data of page: D, address: 70, and adjust so that the Y signal level (A) becomes the specified value.
3) Press the PAUSE button of the adjusting remote commander.

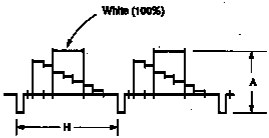

Fig. 7-3-29.

5. Comb Filter Adjustment (VS board)

Mode	Record
Signal	Color bar (Note 1)
Measurement Point	Pin ⑭ of IC201 (Y COMB OUT)
Measuring Instrument	Oscilloscope
Adjusting Element	RV202 (PHASE)
Adjustment Page	D
Adjustment Address	71 (COMB ADJ)
Specified Value	Residual chroma component (A) is minimum.

Note 1: Connect the pattern generator as shown in the following figure.

Note 2: Connect Pin ㉔ of IC251 (INPUT SEL) and Pin ⑨ of IC251 (Vcc) with a jumper wire.

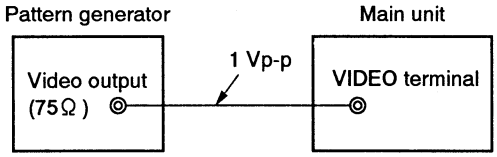

Note: The TV monitor cannot be connected.
Use the view finder to monitor.

Adjusting method:

1) Set to the VIDEO input mode.
2) Set to the record mode.
3) Page: 1, address: 00, data: 01
4) Change the data of page: D, address: 71, and adjust the residual chroma component (A) to minimum.
5) Adjust RV202 so that the residual chroma component becames minimum.
6) Repeat 4) and 5).
7) Press the PAUSE button of the adjusting remote commander.

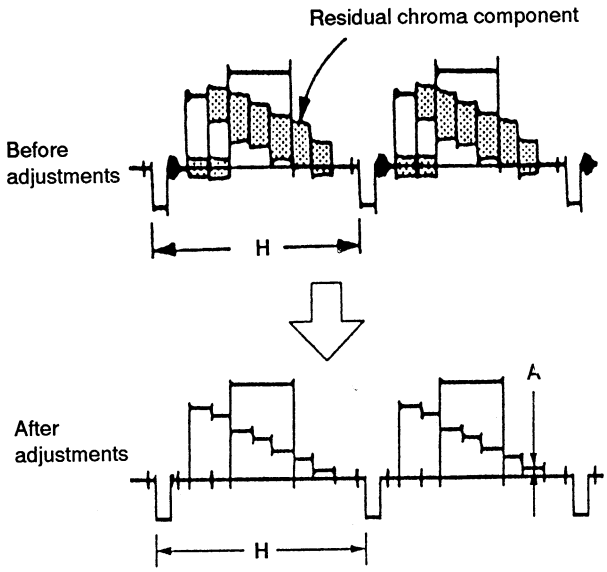

Fig. 7-3-30.

5. Comb Filter Adjustment (V5 board)

Mode	Record
Signal	Color bar (Note 1)
Measurement Point	Pin ⑭ of IC201 (Y COMB OUT)
Measuring Instrument	Oscilloscope
Adjusting Element	RV202 (PHASE)
Adjustment Page	D
Adjustment Address	71 (COMB ADJ)
Specified Value	Residual chroma component (A) is minimum.

Note 1: Connect the pattern generator as shown in the following figure.

Note 2: Connect Pin ⑭ of IC251 (INPUT SEL) and Pin ⑮ of IC251 (Vcc) with a jumper wire.

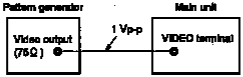

Note: The TV monitor cannot be connected.
Use the view finder to monitor.

Adjusting method:

1) Set to the VIDEO input mode.
2) Set to the record mode.
3) Page: 1, address: 00, data: 01
4) Change the data of page: D, address: 71, and adjust the residual chroma component (A) to minimum.
5) Adjust RV202 so that the residual chroma component becomes minimum.
6) Repeat 4) and 5).
7) Press the PAUSE button of the adjusting remote commander.

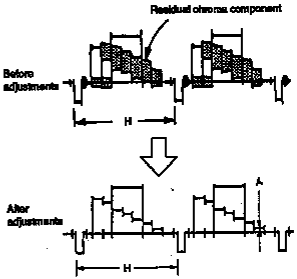

Fig. 7-3-30.

6. Emphasis Input Level Adjustment (VS board)

Y level of emphasis circuit setting. If deviated, this causes too bright or too dark image during play back after recording.

Mode	Record
Signal	Color bar (CAMERA input)
Measurement Point	Pin ⑤ of IC201 (EMPH IN) or Pin ⑤ of IC205
Measuring Instrument	Oscilloscope
Adjustment Page	D
Adjustment Address	82 (EMPH (EE))
Specified Value	A=0.50 ± 0.01V

Note 1: The chroma signal input is not required.

Adjusting method:

1) Page: 1, address: 00, data: 01
2) Change the data of page: D, address: 82, and adjust so that the Y signal level (A) becomes the specified value.
3) Press the PAUSE button of the adjusting remote commander.

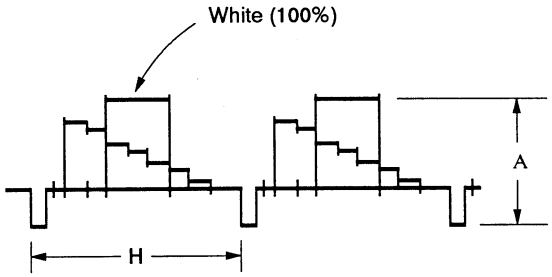

Fig. 7-3-31.

7. WHITE CLIP check (VS board)

Mode	Record
Signal	Color bar (CAMERA input)
Measurement Point	Pin ㊴ of IC201 (Y RF OUT)
Measuring Instrument	Oscilloscope
Adjustment Page	D
Adjustment Address	Hi8 mode ME tape: 78 (W CLIP (SP E ME)) Hi8 mode Hi8 MP tape: 79 (W CLIP (SP E MP)) Normal mode MP tape: 7B (W CLIP (SP L MP))
Specified Value	Hi8 mode ME tape: A=195 ± 10% Hi8 mode Hi8 MP tape: A=190 ± 10% Normal mode MP tape: A=220 ± 10%

Note 1: The data of address 78 to 7B are fixed value.

Address	Data
78	59
79	53
7A	7B
7B	7B

Note 2: The chroma signal input is not required.

Checking method:

1) Set to the record mode.
2) Set data: 00 to page: 2, address: 00.
   (Specification of category 00)
3) Set data: 04 to page: 2, address: B0.
4) After memorizing the data of address: 9A of page: 2, set data: 01 to the address. (TEST 2 mode setting)
5) Check that the white clip level (A) satisfies the specified value.

Processing after completing adjustments

1) Set the data memorized at step 4) to address: 9A of page: 2.
2) Set data: 00 to page: 2, address: B0.
   (Release of TEST 2 mode)

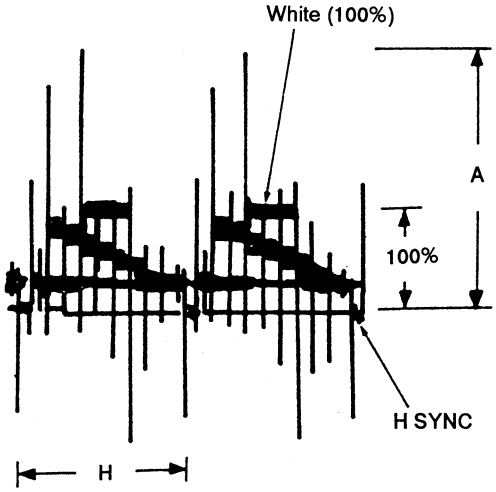

Fig. 7-3-32.

6. Emphasis Input Level Adjustment (VS board)

Y level of emphasis circuit setting. If deviated, this causes too bright or too dark image during play back after recording.

Mode	Record
Signal	Color bar (CAMERA input)
Measurement Point	Pin Ⓑ of IC201 (EMPH IN) or Pin Ⓑ of IC205
Measuring Instrument	Oscilloscope
Adjustment Page	D
Adjustment Address	82 (EMPH (BE))
Specified Value	A=0.50 ± 0.01V

Note 1: The chroma signal input is not required.

Adjusting method:

1) Page: 1, address: 00, data: 01
2) Change the data of page: D, address: 82, and adjust so that the Y signal level (A) becomes the specified value.
3) Press the PAUSE button of the adjusting remote commander.

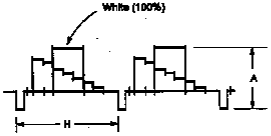

Fig. 7-3-31.

7. WHITE CLIP check (VS board)

Mode	Record
Signal	Color bar (CAMERA input)
Measurement Point	Pin Ⓐ of IC201 (Y RF OUT)
Measuring Instrument	Oscilloscope
Adjustment Page	D
Adjustment Address	Hi8 mode ME tape: 78 (W CLIP (SP B ME)) Hi8 mode Hi8 MP tape: 79 (W CLIP (SP B MP)) Normal mode MP tape: 7B (W CLIP (SP L MP))
Specified Value	Hi8 mode ME tape: A=195 ± 10% Hi8 mode Hi8 MP tape: A=190 ± 10% Normal mode MP tape: A=220 ± 10%

Note 1: The data of address 78 to 7B are fixed value.

Address	Data
78	59
79	53
7A	7B
7B	7B

Note 2: The chroma signal input is not required.

Checking method:

1) Set in the record mode.
2) Set data: 00 to page: 2, address: 00. (Specification of category 00)
3) Set data: 04 to page: 2, address: B0.
4) After memorizing the data of address: 9A of page: 2, set data: 01 to the address. (TEST 2 mode setting)
5) Check that the white clip level (A) satisfies the specified value.

Processing after completing adjustments

1) Set the data memorized at step 4) to address: 9A of page: 2.
2) Set data: 00 to page: 2, address: B0. (Release of TEST 2 mode)

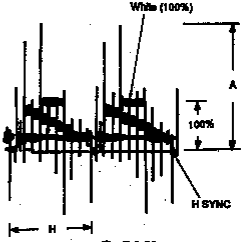

Fig. 7-3-32.

8. DARK CLIP check (VS board)

Mode	Record
Signal	Color bar (CAMERA input)
Measurement Point	Pin ㊴ of IC201 (Y RF OUT)
Measuring Instrument	Oscilloscope
Adjustment Page	D
Adjustment Address	24 (D CLIP 1) 25 (D CLIP 2)
Specified Value	Hi8 mode ME tape: A=85 ± 10% Hi8 mode Hi8 MP tape: A=80 ± 10% Normal mode MP tape: A=100 ± 10%

Note 1: The data of address 24 and 25 are fixed value.
(The data of address 24 and 25 are "00".)
Note 2: The chroma signal input is not required.

Checking method:
1) Set to the record mode.
2) Set data: 00 to page: 2, address: 00.
(Specification of category 00)
3) Set data: 04 to page: 2, address: B0.
4) After memorizing the data of address: 9A of page: 2, set data: 01 to the address. (TEST 2 mode setting)
5) Check that the dark clip level (A) satisfies the specified value.

Processing after completing adjustments
1) Set the data memorized at step 4) to address: 9A of page: 2.
2) Set data: 00 to page: 2, address: B0.
(Release of TEST 2 mode)

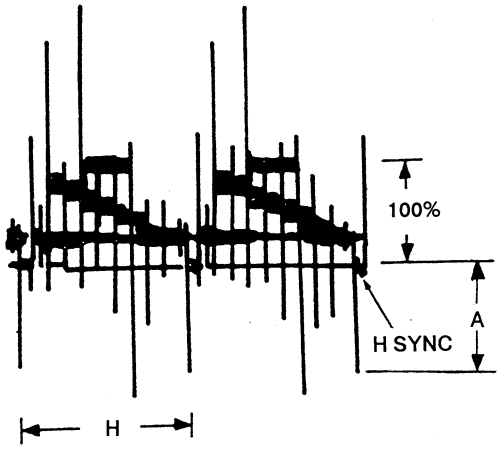

Fig. 7-3-33.

9. DE EMPH Level Adjustment (VS board)

De-emphasis input level setting. If deviated, this causes excessive brightness or darkness.

Mode	Playback
Signal	Alignment tape: For checking operations Color bar section Normal mode : WR5-5NSP Hi8 mode : WR5-8NSE
Measurement Point	Pin ⑰ of IC201 (DL IN 2)
Measuring Instrument	Oscilloscope
Adjustment Page	D
Adjustment Address	86 (DE-EMPH (PB E)) 87 (DE-EMPH (PB L))
Specified Value	A=0.54 ± 0.01V

Adjusting method:
1) Page: 1, address: 00, data: 01
2) Playback the color bar section of the normal mode alignment tape (WR5-5NSP).
3) Change the data of page: D, address: 87, and adjust so that the Y signal level (A) becomes the specified value.
4) Press the PAUSE button of the adjusting remote commander.
5) Playback the color bar section of the Hi8 mode alignment tape (WR5-8NSE).
6) Change the data of page: D, address: 86 and adjust so that the Y signal level (A) becames specified value.
7) Press the PAUSE button of the adjusting remote commander.
8) Perform "PB Y OUT Level adjustment".

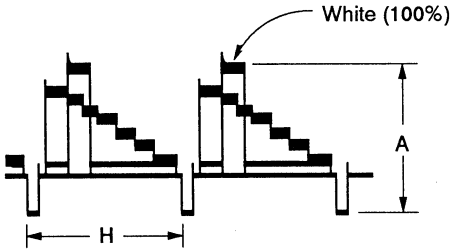

Fig. 7-3-34.

8. DARK CLIP check (VB board)

Mode	Record
Signal	Color bar (CAMERA input)
Measurement Point	Pin ⓐ of IC201 (Y RF OUT)
Measuring Instrument	Oscilloscope
Adjustment Page	D
Adjustment Address	24 (D CLIP 1) 25 (D CLIP 2)
Specified Value	Hi8 mode ME tape: A=85 ± 10% Hi8 mode Hi8 MP tape: A=80 ± 10% Normal mode MP tape: A=100 ± 10%

Note 1: The data of address 24 and 25 are fixed value.
(The data of address 24 and 25 are "00".)
Note 2: The chroma signal input is not required.

Checking method:
1) Set to the record mode.
2) Set data: 00 to page: 2, address: 00.
(Specification of category 00)
3) Set data: 04 to page: 2, address: B0.
4) After memorizing the data of address: 9A of page: 2, set data: 01 to the address. (TEST 2 mode setting)
5) Check that the dark clip level (A) satisfies the specified value.

Processing after completing adjustments
1) Set the data memorized at step 4) to address: 9A of page: 2.
2) Set data: 00 to page: 2, address: B0.
(Release of TEST 2 mode)

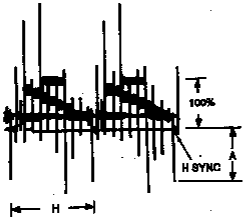

Fig. 7-3-33.

9. DE EMPH Level Adjustment (VB board)

De-emphasis input level setting. If deviated, this causes excessive brightness or darkness.

Mode	Playback
Signal	Alignment tape: For checking operations Color bar section Normal mode : WR5-5NSP Hi8 mode : WR5-8NSE
Measurement Point	Pin ⓑ of IC201 (DL IN 2)
Measuring Instrument	Oscilloscope
Adjustment Page	D
Adjustment Address	86 (DE-EMPH (PB E)) 87 (DE-EMPH (PB L))
Specified Value	A=0.54 ± 0.01V

Adjusting method:
1) Page: 1, address: 00, data: 01
2) Playback the color bar section of the normal mode alignment tape (WR5-5NSP).
3) Change the data of page: D, address: 87, and adjust so that the Y signal level (A) becomes the specified value.
4) Press the PAUSE button of the adjusting remote commander.
5) Playback the color bar section of the Hi8 mode alignment tape (WR5-8NSE).
6) Change the data of page: D, address: 86 and adjust so that the Y signal level (A) becomes specified value.
7) Press the PAUSE button of the adjusting remote commander.
8) Perform "PB Y OUT Level adjustment".

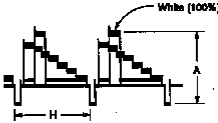

Fig. 7-3-34.

10. PB Y OUT Level Adjustment (VS board)

PB LINE OUT Y level setting. If deviated, this causes too bright or too dark picture.

Mode	Playback
Signal	Alignment tape: For checking operations (WR5-8NSE) Color bar section
Measurement Point	Pin ② of CN201 (Y IN/OUT)
Measuring Instrument	Oscilloscope
Adjustment Page	D
Adjustment Address	83 (EMPH (PB))
Specified Value	A=1.0 ± 0.05V

Note 1: Connect Pin ② of CN201 and Pin ③ of CN201 (S-Y GND) with a 75Ω resistor.
(Part code: 1-247-804-11)

Adjusting method:

1) Page: 1, address: 00, data: 01
2) Change the data of page: D, address: 83, and adjust so that the video signal level (A) becomes the specified value.
3) Press the PAUSE button of the adjusting remote commander.

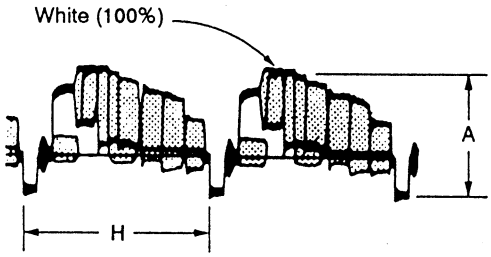

Fig. 7-3-35.

11. Normal Mode Y FM Carrier Frequency Adjustment (VS board)

Normal mode FM carrier frequency of REC Y setting. If deviated, this caused blurred played back picture or deteriorated resolution.

Mode	Record
Signal	No signal (CAMERA input)
Measurement Point	Pin ㊴ of IC201 (Y RF OUT)
Measuring Instrument	Frequency counter
Adjustment Page	D
Adjustment Address	75 (CARRIER (L))
Specified Value	4.385 ± 0.01 MHz

Adjusting method:

1) Insert a normal MP type tape.
2) Page: 1, address: 00, data: 01
3) Change the data of page: D, address: 75, and adjust so that the Y FM carrier frequency becomes the specified value.
4) Press the PAUSE button of the adjusting remote commander.

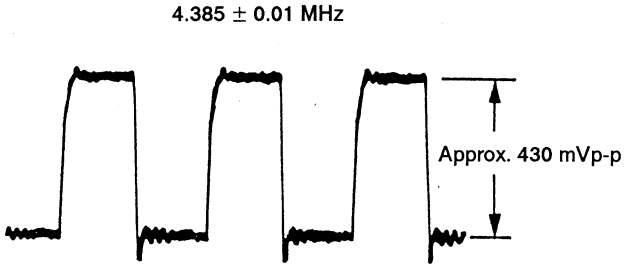

Fig. 7-3-36.

10. PB Y OUT Level Adjustment (V8 board)

PB LINE OUT Y level setting. If deviated, this causes too bright or too dark picture.

Mode	Playback
Signal	Alignmest tape: For checking operations (WR5-8NSE) Color bar section
Measurement Point	Pin ② of CN201 (Y IN/OUT)
Measuring Instrument	Oscilloscope
Adjustment Page	D
Adjustment Address	83 (EMPH (PB))
Specified Value	A=1.0 ± 0.05V

Note 1: Connect Pin ② of CN201 and Pin ⑱ of CN201 (S-Y GND) with a 75Ω resistor.
(Part code: 1-247-804-11)

Adjusting method:

1) Page: 1, address: 00, data: 01
2) Change the data of page: D, address: 83, and adjust so that the video signal level (A) becomes the specified value.
3) Press the PAUSE button of the adjusting remote commander.

Fig. 7-3-35.

11. Normal Mode Y FM Carrier Frequency Adjustment (V8 board)

Normal mode FM carrier frequency of REC Y setting. If deviated, this caused blurred played back picture or deteriorated resolution.

Mode	Record
Signal	No signal (CAMERA input)
Measurement Point	Pin ⑨ of IC201 (Y RF OUT)
Measuring Instrument	Frequency counter
Adjustment Page	D
Adjustment Address	75 (CARRIER (L))
Specified Value	4.385 ± 0.01 MHz

Adjusting method:

1) Insert a normal MP type tape.
2) Page: 1, address: 00, data: 01
3) Change the data of page: D, address: 75, and adjust so that the Y FM carrier frequency becomes the specified value.
4) Press the PAUSE button of the adjusting remote commander.

Fig. 7-3-36.

12. Normal Mode Y FM Deviation Adjustment (VS board)

Normal mode FM deviation of REC Y setting. If deviated, this causes too bright/dark image, or marked occurrence of black picture or deteriorated resolution.

Mode	Record and playback
Signal	Color bar (CAMERA input)
Measurement Point	Pin ⑰ of IC201 (DL IN 2)
Measuring Instrument	Oscilloscope
Adjustment Page	D
Adjustment Address	77 (DEVIATION (L))
Specified Value	A=0.54 ± 0.01V

Note 1: Check that "Emphasis Input Level Adjustment", have been completed.

Note 2: The chroma signal input is not required.

Adjusting method:

1) Insert a normal MP type tape.
2) Page: 1, address: 00, data: 01
3) Record the color bar signal.
4) Playback the recorded signal.
5) Check the playback signal level (A).
   Specification:A=0.54 ± 0.01V
6) If the specification is not satisfied, change the data of page: D, address: 77, and repeat steps 3) to 5).

Playback signal level	Changing the data
When smaller than the specified value	Increase
When bigger than the specified value	Decrease

7) Press the PAUSE button of the adjusting remote commander.
8) Perform "Normal Mode Y FM Carrier Frequency Adjustment".

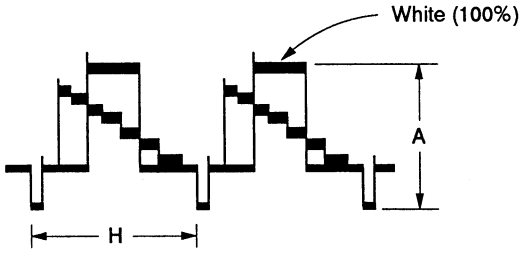

Fig. 7-3-37.

13. Hi8 Mode Y FM Carrier Frequency Adjustment (VS board)

Hi8 mode FM carrier frequency of REC Y setting. If deviated, this caused blurred played back picture or deteriorated resolution.

Mode	Record
Signal	No signal (CAMERA input)
Measurement Point	Pin ㊴ of IC201 (Y RF OUT)
Measuring Instrument	Frequency counter
Adjustment Page	D
Adjustment Address	74 (CARRIER (E))
Specified Value	6.000 ± 0.01 MHz

Adjusting method:

1) Insert a ME type tape.
2) Page: 1, address: 00, data: 01
3) Change the data of page: D, address: 74, and adjust so that the Y FM carrier frequency becomes the specified value.
4) Press the PAUSE button of the adjusting remote commander.

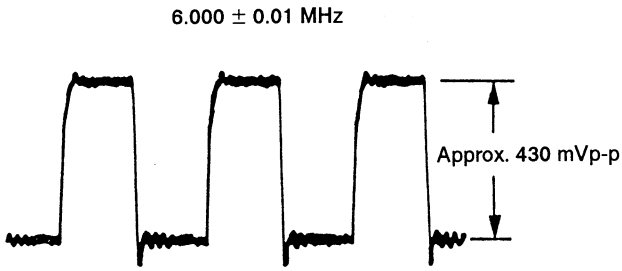

Fig. 7-3-38.

12. Normal Mode Y FM Deviation Adjustment (VS board)

Normal mode FM deviation of REC Y setting. If deviated, this causes too bright/dark image, or marked occurrence of black picture or deteriorated resolution.

Mode	Record and playback
Signal	Color bar (CAMERA input)
Measurement Point	Pin ⑪ of IC201 (DL IN 2)
Measuring Instrument	Oscilloscope
Adjustment Page	D
Adjustment Address	77 (DEVIATION (L))
Specified Value	A=0.54 ± 0.01V

Note 1: Check that "Emphasis Input Level Adjustment", have been completed.

Note 2: The chroma signal input is not required.

Adjusting method:

1) Insert a normal MP type tape.
2) Page: 1, address: 00, data: 01
3) Record the color bar signal.
4) Playback the recorded signal.
5) Check the playback signal level (A).
   Specification:A=0.54 ± 0.01V
6) If the specification is not satisfied, change the data of page: D, address: 77, and repeat steps 3) to 5).

Playback signal level	Changing the data
When smaller than the specified value	Increase
When bigger than the specified value	Decrease

7) Press the PAUSE button of the adjusting remote commander.
8) Perform "Normal Mode Y FM Carrier Frequency Adjustment".

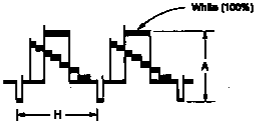

Fig. 7-3-37.

13. His Mode Y FM Carrier Frequency Adjustment (VS board)

His mode FM carrier frequency of REC Y setting. If deviated, this caused blurred played back picture or deteriorated resolution.

Mode	Record
Signal	No signal (CAMERA input)
Measurement Point	Pin ⑨ of IC201 (Y RF OUT)
Measuring Instrument	Frequency counter
Adjustment Page	D
Adjustment Address	74 (CARRIER (E))
Specified Value	6.000 ± 0.01 MHz

Adjusting method:

1) Insert a ME type tape.
2) Page: 1, address: 00, data: 01
3) Change the data of page: D, address: 74, and adjust so that the Y FM carrier frequency becomes the specified value.
4) Press the PAUSE button of the adjusting remote commander.

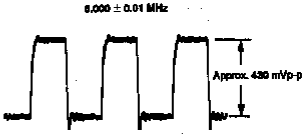

Fig. 7-3-38.

14. Hi8 Mode Y FM Deviation Adjustment (VS board)

Hi8 mode FM deviation of REC Y setting. If deviated, this causes too bright/dark image, or marked occurrence of black picture or deteriorated resolution.

Mode	Record and playback
Signal	Color bar (CAMERA input)
Measurement Point	Pin ⑰ of IC201 (DL IN 2)
Measuring Instrument	Oscilloscope
Adjustment Page	D
Adjustment Address	76 (DEVIATION (E))
Specified Value	A=0.54 ± 0.01V

Note 1: Check that "Emphasis Input Level Adjustment", have been completed.

Note 2: The chroma signal input is not required.

Adjusting method:

1) Insert a ME type tape.
2) Page: 1, address: 00, data: 01
3) Record the color bar signal.
4) Playback the recorded signal.
5) Check the playback signal level (A).
   Specification:A=0.54 ± 0.01V
6) If the specification is not satisfied, change the data of page: D, address: 76, and repeat steps 3) to 5).

Playback signal level	Changing the data
When smaller than the specified value	Increase
When bigger than the specified value	Decrease

7) Press the PAUSE button of the adjusting remote commander.
8) Perform "Hi8 Mode Y FM Carrier Frequency Adjustment".

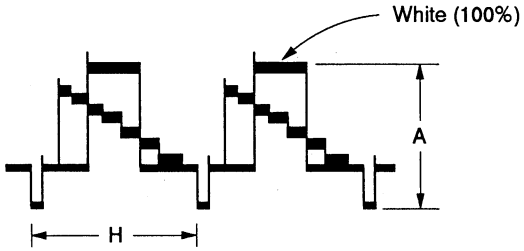

Fig. 7-3-39.

15. Chroma Emphasis Adjustment 1 (VS board)

Emphasis center frequency setting. If deviated, this causes unnatural color.

Mode	Record
Signal	Color bar (CAMERA input)
Measurement Point	Pin ⑧ of IC201 (REC C OUT)
Measuring Instrument	Oscilloscope
Adjustment Page	D
Adjustment Address	80 (C EMPH (EE)) 81 (C EMPH (PB))
Specified Value	Minimum fo component

Adjusting method:

1) Set to the record mode.
2) Page: 1, address: 00, data: 01
3) Set data: 00 to page: 2, address: 00.
   (Specification of category 00)
4) Set data: 04 to page: 2, address: B0.
5) After memorizing the data of address: 9A of page: 2, set data: 02 to the address. (TEST 1 mode setting)
6) Change the data of page: D, address: 80, and adjust so that the amplitude of the latter section of the chroma signal (yellow section) becames minimum.
7) Press the PAUSE button of the adjusting remote commander.
8) Set the same data as address: 80 of page: D to address: 81 of page D.
9) Press the PAUSE button of the adjusting remote commander.

Processing after completing adjustments

1) Set the data memorized at step 5) to address: 9A of page: 2.
2) Set data: 00 to page: 2, address: B0.
   (Release of TEST 1 mode)

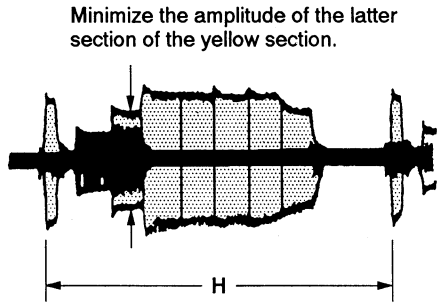

Fig. 7-3-40.

14. Hi8 Mode Y FM Deviation Adjustment (VB board)

Hi8 mode FM deviation of REC Y setting. If deviated, this causes too bright/dark image, or marked occurrence of black picture or deteriorated resolution.

Mode	Record and playback
Signal	Color bar (CAMERA input)
Measurement Point	Pin ⑪ of IC201 (DL IN 2)
Measuring Instrument	Oscilloscope
Adjustment Page	D
Adjustment Address	76 (DEVIATION (E))
Specified Value	A=0.54 ± 0.01V

Note 1: Check that "Emphasis Input Level Adjustment", have been completed.
Note 2: The chroma signal input is not required.

Adjusting method:
1) Insert a ME type tape.
2) Page: 1, address: 00, data: 01
3) Record the color bar signal.
4) Playback the recorded signal.
5) Check the playback signal level (A).
   Specification:A=0.54 ± 0.01V
6) If the specification is not satisfied, change the data of page: D, address: 76, and repeat steps 3) to 5).

Playback signal level	Changing the data
When smaller than the specified value	Increase
When bigger than the specified value	Decrease

7) Press the PAUSE button of the adjusting remote commander.
8) Perform "Hi8 Mode Y FM Carrier Frequency Adjustment".

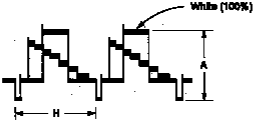

Fig. 7-3-39.

15. Chroma Emphasis Adjustment 1 (VB board)

Emphasis center frequency setting. If deviated, this causes unnatural color.

Mode	Record
Signal	Color bar (CAMERA input)
Measurement Point	Pin ⑤ of IC201 (REC C OUT)
Measuring Instrument	Oscilloscope
Adjustment Page	D
Adjustment Address	80 (C EMPH (EE)) 81 (C EMPH (PB))
Specified Value	Minimum fo component

Adjusting method:
1) Set to the record mode.
2) Page: 1, address: 00, data: 01
3) Set data: 00 to page: 2, address: 00.
   (Specification of category 00)
4) Set data: 04 to page: 2, address: B0.
5) After memorizing the data of address: 9A of page: 2, set data: 02 to the address. (TEST 1 mode setting)
6) Change the data of page: D, address: 80, and adjust so that the amplitude of the latter section of the chroma signal (yellow section) becomes minimum.
7) Press the PAUSE button of the adjusting remote commander.
8) Set the same data as address: 80 of page: D to address: 81 of page: D.
9) Press the PAUSE button of the adjusting remote commander.

Processing after completing adjustments
1) Set the data memorized at step 5) to address: 9A of page: 2.
2) Set data: 00 to page: 2, address: B0.
   (Release of TEST 1 mode)

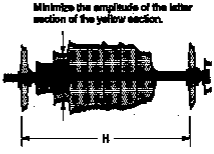

Fig. 7-3-40.

16. Chroma Emphasis Adjustment 2 (VS board)

Emphasis center frequency setting. If deviated, this causes unnatural color.

Mode	Playback
Signal	Alignment tape: For checking operations Color bar section
Measurement Point	Video output terminal
Measuring Instrument	Vectorscope
Adjustment Page	D
Adjustment Address	81 (C EMPH (PB)) 80 (C EMPH (EE))
Specified Value	The path from the blue luminance point to black luminance point should be a straight line.

Adjusting method:

1) Page: 1, address: 00, data: 01
2) Change the data of page: D, address: 81, and adjust so that the path from the blue luminance point to black luminance point becames a straight line.
3) Press the PAUSE button of the adjusting remote commander.
4) Set the same data as address: 81 of page: D to address: 80 of page: D.
5) Press PAUSE button of the adjusting remote commander.

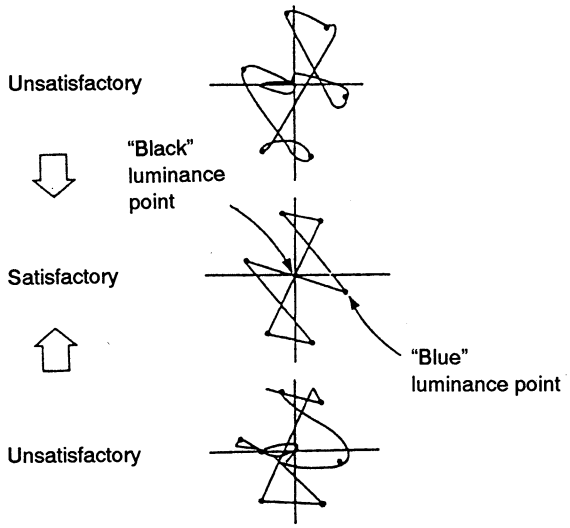

Fig. 7-3-41.

17. Comb Filter Fine Adjustment (VS board)

Set the level and phase of the 1H delayed signal for the comb filter. If deviated, this causes marked occurrence of beets in played back picture.

Mode	Playback
Signal	Alignment tape: For checking operations Color bar section
Measurement Point	Video output terminal
Measuring Instrument	Vectorscope
Adjusting Element	RV202 (PHASE)
Adjustment Page	D
Adjustment Address	71 (COMB ADJ)
Specified Value	Minimum color luminance point movement when the "Edit" switch is turned on/off

Note 1: Turn the edit ON/OFF at the menu screen.

Adjusting method:

1) Page: 1, address: 00, data: 01
2) Minimize the movements of the color luminance point when the edit is on/off with RV202.
3) Change the data of page: D, address: 71 and minimize the movements of the color luminance point when the edit is on/off
4) Press the PAUSE button of the adjusting remote commander.
5) Repeat steps 2) to 4).

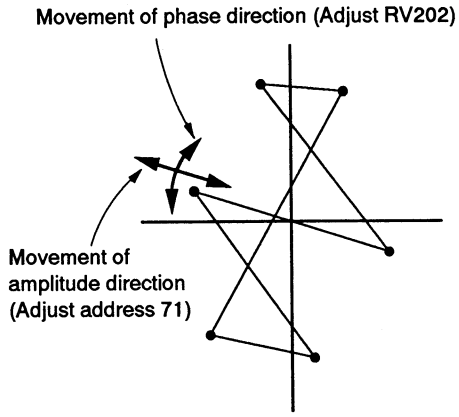

Fig. 7-3-42.

16. Chroma Emphasis Adjustment 2 (V8 board)

Emphasis center frequency setting. If deviated, this causes unnatural color.

Mode	Playback
Signal	Alignment tape: For checking operations Color bar section
Measurement Point	Video output terminal
Measuring Instrument	Vectorscope
Adjustment Page	D
Adjustment Address	81 (C EMPH (PB)) 80 (C EMPH (RE))
Specified Value	The path from the blue luminance point to black luminance point should be a straight line.

Adjusting method:

1) Page: 1, address: 00, data: 01
2) Change the data of page: D, address: 81, and adjust so that the path from the blue luminance point to black luminance point becomes a straight line.
3) Press the PAUSE button of the adjusting remote commander.
4) Set the same data as address: 81 of page: D to address: 80 of page: D.
5) Press PAUSE button of the adjusting remote commander.

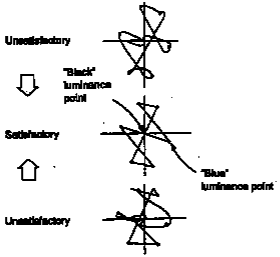

Fig. 7-3-41.

17. Comb Filter Fine Adjustment (V8 board)

Set the level and phase of the 1H delayed signal for the comb filter. If deviated, this causes marked occurrence of beats in played back picture.

Mode	Playback
Signal	Alignment tape: For checking operations Color bar section
Measurement Point	Video output terminal
Measuring Instrument	Vectorscope
Adjusting Element	RV202 (PHASE)
Adjustment Page	D
Adjustment Address	71 (COMB ADJ)
Specified Value	Minimum color luminance point movement when the "Edit" switch is turned on/off

Note 1: Turn the edit ON/OFF at the menu screen.

Adjusting method:

1) Page: 1, address: 00, data: 01
2) Minimize the movements of the color luminance point when the edit is on/off with RV202.
3) Change the data of page: D, address: 71 and minimize the movements of the color luminance point when the edit is on/off
4) Press the PAUSE button of the adjusting remote commander.
5) Repeat steps 2) to 4).

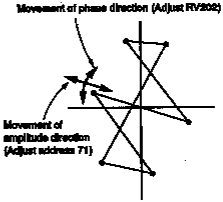

Fig. 7-3-42.

18. REC Y Level Adjustment (VS board)

Recording level of luminance signal setting. If deviated, this causes black stretch over modulation noise or color shade.

Mode	Record
Signal	No signal
Measurement Point	Pin ⑥ of CN102 (REC 2)
Measuring Instrument	Oscilloscope Board width limit: 20 MHz
Adjustment Page	D
Adjustment Address	44 (REC Y 2CH (E MP)) 40 (REC Y 1CH (E MP)) 45 (REC Y 2CH (E ME)) 41 (REC Y 1CH (E ME)) 47 (REC Y 2CH (L MP)) 43 (REC Y 1CH (L MP)) 46 (REC Y 2CH (L ME)) 42 (REC Y 1CH (L ME))
Specified Value	A=125 ± 5 mVp-p

Note: Use a ME type tape.

Adjusting method:

1) Page: 1, address: 00, data: 01
2) After memorizing the data of address: 3A of page: D, set data: FF to the address.
3) Set data: FF to page: D, address: 40 and press the PAUSE button of the adjusting remote commander.
4) Change the data of page: D, address: 44, and adjust so that REC Y level (A) becomes the specified value.
5) Press the PAUSE button of the adjusting remote commander.
6) Read the data of page: D, address: 44 and set to D_{44}.
7) Convert D_{44} to decimal notation, and obtain D_{44}'.
   (Refer to Table 7-1-4. "Hexadecimal notation – decimal notataion conversion table")
8) Calculate D_{45}', D_{46}' and D_{47}' using following equations (decimal notation calculation).
   $D_{45}'=D_{44}'+5$
   $D_{46}'=D_{44}'+4$
   $D_{47}'=D_{44}'-3$
9) Convert D_{45}', D_{46}' and D_{47}' to hexadecimal notation and obtain D_{45}, D_{46} and D_{47}.
10) Set data to address: 40, 41, 42, 43, 45, 46 and 47 of page: D as shown in following table.
    (Be sure to press the PAUSE button of the adjusting remote control unit after setting each data.)
11) Set the data memorized at step 2) to address: 3A of page: D and press the PAUSE button of the adjusting remote commander.

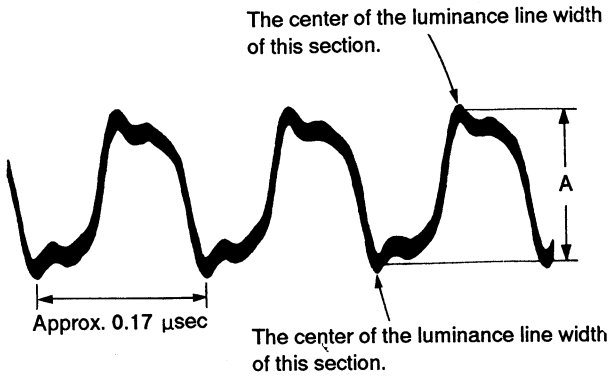

Fig. 7-3-43.

Address	Data
40	D_{44}
41	D_{45}
42	D_{46}
43	D_{47}
45	D_{45}
46	D_{46}
47	D_{47}

18. REC Y Level Adjustment (V5 board)

Recording level of luminance signal setting. If deviated, this causes black stretch over modulation noise or color shade.

Mode	Record
Signal	No signal
Measurement Point	Pin Ⓑ of CN102 (REC 2)
Measuring Instrument	Oscilloscope Board width limit: 20 MHz
Adjustment Page	D
Adjustment Address	44 (REC Y 2CH (E MP)) 40 (REC Y 1CH (E MP)) 45 (REC Y 2CH (E ME)) 41 (REC Y 1CH (E ME)) 47 (REC Y 2CH (L MP)) 43 (REC Y 1CH (L MP)) 46 (REC Y 2CH (L ME)) 42 (REC Y 1CH (L ME))
Specified Value	A=125 ± 5 mVp-p

Note: Use a ME type tape.

Adjusting method:

1) Page: 1, address: 00, data: 01
2) After memorizing the data of address: 3A of page: D, set data: FF in the address.
3) Set data: FF to page: D, address: 40 and press the PAUSE button of the adjusting remote commander.
4) Change the data of page: D, address: 44, and adjust so that REC Y level (A) becomes the specified value.
5) Press the PAUSE button of the adjusting remote commander.
6) Read the data of page: D, address: 44 and set to D_{44}.
7) Convert D_{44} to decimal notation, and obtain D_{44}'.
   (Refer to Table 7-1-4. "Hexadecimal notation – decimal notation conversion table")
8) Calculate D_{45}', D_{46}' and D_{47}' using following equations (decimal notation calculation).
   $D_{45}' = D_{44}' + 5$
   $D_{46}' = D_{44}' + 4$
   $D_{47}' = D_{44}' - 3$
9) Convert D_{45}', D_{46}' and D_{47}' to hexadecimal notation and obtain D_{45}, D_{46} and D_{47}.
10) Set data to address: 40, 41, 42, 43, 45, 46 and 47 of page: D as shown in following table.
    (Be sure to press the PAUSE button of the adjusting remote control unit after setting each data.)
11) Set the data memorized at step 2) to address: 3A of page: D and press the PAUSE button of the adjusting remote commander.

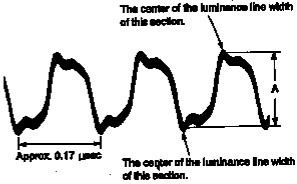

Fig. 7-3-43.

Address	Data
40	D_{44}
41	D_{45}
42	D_{46}
43	D_{47}
45	D_{45}
46	D_{46}
47	D_{47}

19. REC L Adjustment (VS board)

Set the recording levels of the REC AFM signal and REC ATF signal. If the level is too low, the audio S/N will deteriorate, tracking will not be stable, or SP/LP will not be discriminated properly. If too high, color beets will be produced on the self-recording/playback image.

Mode	Record
Signal	No signal (VIDEO input)
Measurement Point	Pin ⑥ of CN102 (REC 2)
Measuring Instrument	Oscilloscope
Adjustment Page	D
Adjustment Address	3A (REC LOW 2 (ME)) 38 (REC LOW 1 (ME)) 3B (REC LOW 2 (MP)) 39 (REC LOW 1 (MP))
Specified Value	A=6.8 ± 1.0 mVp-p

Note 1: Use a ME type tape.
Note 2: AU board is required for this adjustment.
Note 3: Do not insert any plug into the right audio input terminal.

Connection:
1) Disconnect HE-14 board.
2) Connect Pin ⑤ of IC508 and GND with a 0.01 μF capacitor. (Parts code: 1-101-004-00)

Adjusting method:
1) Page: 1, address: 00, data: 01
2) Change the data of page: D, address: 3A, and adjust so that the REC AFM signal level (A) becomes the specified value.
3) Press the PAUSE button of the adjusting remote commander.
4) Read the data of page: D, address: 3A, and set to D_{3A}.
5) Set data: D_{3A} to address: 38 of page D.
6) Press the PAUSE button of the adjusting remote commander.
7) Convert D_{3A} to decimal notation, and obtain D_{3A}'. (Refer to Table 7-1-4. "Hexadecimal notation-decimal notation conversion table")
8) Culculate D_{3B}' using following equation (decimal notation calculation).
   $D_{3B}'=D_{3A}'+10$
9) Convert D_{3B}' to hexadecimal notation, and obtain D_{3B}.
10) Set data: D_{3B} to address: 3B of page D.
11) Press the PAUSE button of the adjusting remote commander.
12) Set data: D_{3B} to address: 39 of page D.
13) Press the PAUSE button of the adjusting remote commander.
14) Perform "REC CHROMA Level Adjustment".

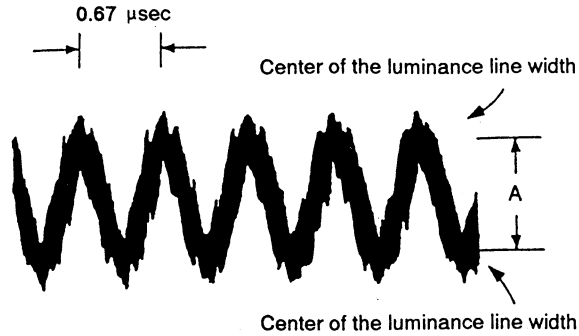

Fig. 7-3-44.

19. REC L Adjustment (V8 board)

Set the recording levels of the REC AFM signal and REC ATF signal. If the level is too low, the audio S/N will deteriorate, tracking will not be stable, or SP/LP will not be discriminated properly. If too high, color beats will be produced on the self-recording/playback image.

Mode	Record
Signal	No signal (VIDEO input)
Measurement Point	Pin Ⓑ of CN102 (REC 2)
Measuring Instrument	Oscilloscope
Adjustment Page	D
Adjustment Address	3A (REC LOW 2 (ME)) 38 (REC LOW 1 (ME)) 3B (REC LOW 2 (MP)) 39 (REC LOW 1 (MP))
Specified Value	A=6.8 ± 1.0 mVp-p

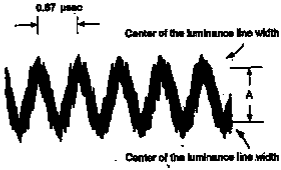

Fig. 7-3-44.

Note 1: Use a ME type tape.
Note 2: AU board is required for this adjustment.
Note 3: Do not insert any plug into the right audio input terminal.

Connection:

1) Disconnect HB-14 board.
2) Connect Pin Ⓑ of IC508 and GND with a 0.01 μF capacitor. (Parts code: 1-101-004-00)

Adjusting method:

1) Page: 1, address: 00, data: 01
2) Change the data of page: D, address: 3A, and adjust so that the REC AFM signal level (A) becomes the specified value.
3) Press the PAUSE button of the adjusting remote commander.
4) Read the data of page: D, address: 3A, and set to D_{3A}.
5) Set data: D_{3A} to address: 38 of page D.
6) Press the PAUSE button of the adjusting remote commander.
7) Convert D_{3A} to decimal notation, and obtain D_{3A}'. (Refer to Table 7-1-4. "Hexadecimal notation-decimal notation conversion table")
8) Calculate D_{3B}' using following equation (decimal notation calculation).

   $D_{3B}' = D_{3A}' + 10$
9) Convert D_{3B}' to hexadecimal notation, and obtain D_{3B}.
10) Set data: D_{3B} to address: 3B of page D.
11) Press the PAUSE button of the adjusting remote commander.
12) Set data: D_{3B} to address: 39 of page D.
13) Press the PAUSE button of the adjusting remote commander.
14) Perform "REC CHROMA Level Adjustment".

20. REC CHROMA Level Adjustment (VS board)

Set REC CHROMA signal level. If it is lower than its normal level, chroma signal noise in played back picture will increase. If it is set higher, Y signal noises will increase and white modulation noises will be prodused.

Mode	Record
Signal	Color bar (CAMERA input)
Measurement Point	Pin ⑥ of CN102 (REC 2)
Measuring Instrument	Oscilloscope
Adjustment Page	D
Adjustment Address	30 (REC C (SP E ME)) 31 (REC C (SP E MP)) 32 (REC C (SP L ME)) 33 (REC C (SP L MP)) 34 (REC C (LP E ME)) 35 (REC C (LP E MP)) 36 (REC C (LP L ME)) 37 (REC C (LP L MP))
Specified Value	A=28 ± 3 mVp-p

Note 1: Use a ME type tape.

Connection:

1) Disconnect HE-14 board.
2) Connect Pin ⑤ of IC508 and GND with a 0.01 μF capacitor. (Parts code: 1-101-004-00)
3) Disconnect AU board.

Adjusting method:

1) Page: 1, address: 00, data: 01
2) Change the data of page: D, address: 30, and adjust so that the REC CHROMA signal level (A) becomes the specified value.
3) Press the PAUSE button of the adjusting remote commander.
4) Read the data of page: D, address: 30, and set to D30.
5) Set data to address: 31 to 37 of page: D as shown in following table.

   (Be sure to press the PAUSE button of the adjusting remote commander after setting each data.)

Address	Data
31	D30
32	D30
33	D30
34	D30
35	D30
36	D30
37	D30

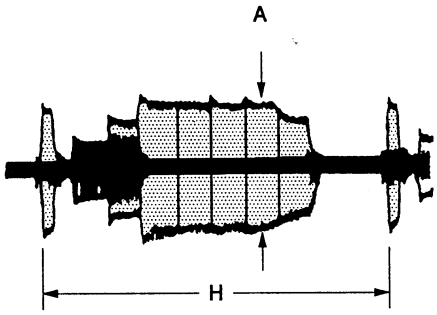

Fig. 7-3-45.

20. REC CHROMA Level Adjustment (VS board)

Set REC CHROMA signal level. If it is lower than its normal level, chroma signal noise in played back picture will increase. If it is set higher, Y signal noises will increase and white modulation noises will be produced.

Mode	Record
Signal	Color bar (CAMERA input)
Measurement Point	Pin Ⓑ of CN102 (REC 2)
Measuring Instrument	Oscilloscope
Adjustment Page	D
Adjustment Address	30 (REC C (SP B ME)) 31 (REC C (SP B MP)) 32 (REC C (SP L ME)) 33 (REC C (SP L MP)) 34 (REC C (LP B ME)) 35 (REC C (LP B MP)) 36 (REC C (LP L ME)) 37 (REC C (LP L MP))
Specified Value	A=28 ± 3 mVp-p

Note 1: Use a ME type tape.

Connection:

1) Disconnect HE-14 board.
2) Connect Pin Ⓔ of IC508 and GND with a 0.01 μF capacitor. (Parts code: 1-101-004-00)
3) Disconnect AU board.

Adjusting method:

1) Page: 1, address: 00, data: 01
2) Change the data of page: D, address: 30, and adjust so that the REC CHROMA signal level (A) becomes the specified value.
3) Press the PAUSE button of the adjusting remote commander.
4) Read the data of page: D, address: 30, and set to D30.
5) Set data to address: 31 to 37 of page: D as shown in following table.

   (Be sure to press the PAUSE button of the adjusting remote commander after setting each data.)

Address	Data
31	D30
32	D30
33	D30
34	D30
35	D30
36	D30
37	D30

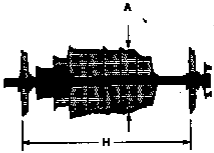

Fig. 7-3-45.

21. REC ATF Level Check (VS board)

Mode	Record
Signal	No signal
Measurement Point	Pin ⑥ of CN102 (REC 2)
Measuring Instrument	Oscilloscope
Specified Value	A=6.6 ± 1.5 mVp-p

Note 1: Use a ME type tape.

Connection:
1) Disconnect HE-14 board.
2) Disconnect AU board.

Adjusting method:
1) Check that the REC ATF signal level (A) satisfise the specified value.

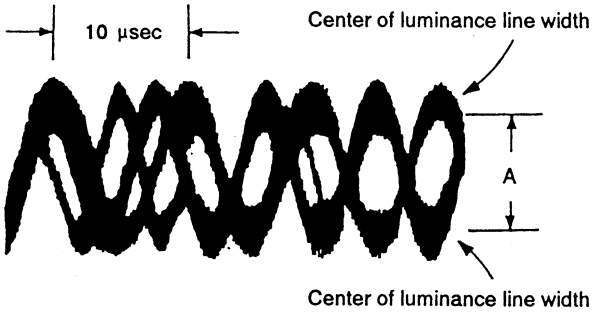

Fig. 7-3-46.

3-7. MONAURAL AUDIO SYSTEM ADJUSTMENT (CCD-TR42/TR70/TR82/TR550)

- Perform the adjustment using the color bar signal as a video signal input for VIDEO terminal

[Connecting the measuring instruments for the audio]
Connect the audio system measuring instruments besides the video system measuring instruments as shown in Fig. 7-3-47, and perform adjustments with the power switch [player] position.

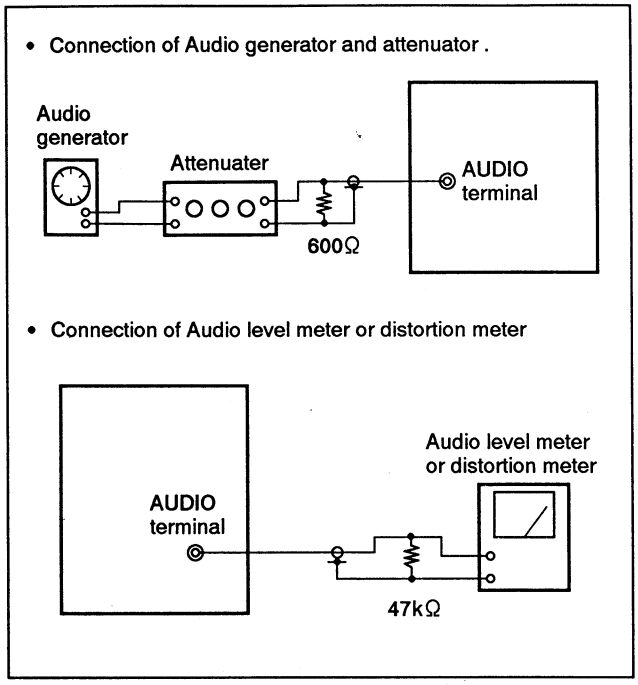

Fig. 7-3-47.

[Adjustment Procedure]
1) E-E output level check
2) Deviation adjustment
3) Overall level characteristics, distortion check
4) Overall noise level check

21. REC ATF Level Check (V9 board)

Mode	Record
Signal	No signal
Measurement Point	Pin ⑧ of CN102 (REC 2)
Measuring Instrument	Oscilloscope
Specified Value	A=6.6 ± 1.5 mVp-p

Note 1: Use a ME type tape.

Correction:
1) Disconnect HE-14 board.
2) Disconnect AU board.

Adjusting method:
1) Check that the REC ATF signal level (A) satisfies the specified value.

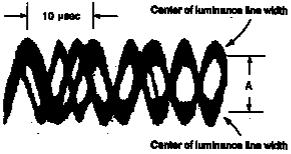

Fig. 7-3-46.

3-7. MONAURAL AUDIO SYSTEM ADJUSTMENT (CCD-TR42/TR70/TR82/TR550)

- Perform the adjustment using the color bar signal as a video signal input for VIDEO terminal

[Connecting the measuring instruments for the audio]
Connect the audio system measuring instruments besides the video system measuring instruments as shown in Fig. 7-3-47, and perform adjustments with the power switch [player] position.

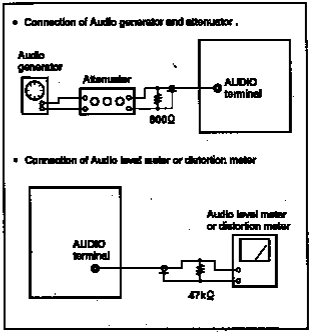

Fig. 7-3-47.

[Adjustment Procedure]
1) E-B output level check
2) Deviation adjustment
3) Overall level characteristics, distortion check
4) Overall noise level check

1. E-E Output Level Check (AU-169 board)

Mode	Record
Signal	400 Hz, –7.5 dBs, Audio input terminal
Measurement Point	Pin ㊾ of IC1301
Measuring Instrument	Audio level meter (Oscilloscope)
Specified Value	–7.5 ± 2 dBs $\left(925 \begin{smallmatrix}+240\\-190\end{smallmatrix} \text{ mVp-p}\right)$

Checking method:

1) Check that the 400 Hz signal level satisfies the specified value.

2. Deviation Adjustment

Adjust to the optimum audio FM signal deviation.
If the adjustment is not correct, its playback level will differ from that of other units.

Mode	Playback
Signal	Alignment tape: For checking the operation (WR5-5NSP)
Measurement Point	Audio output terminal
Measuring Instrument	Oscilloscope
Adjustment Page	D
Adjustment Address	8F (1.5 MHz DEV)
Specified Value	–7.5 ± 0.5 dBs

Adjusting method:

1) Page: 1, address: 00, data: 01
2) Change the data of page: D, address: 8F, and adjust so that the 400 Hz signal level becomes the specified value.
3) Press the PAUSE button of the adjusting remote commander.

3. Overall Level Characteristic, Distortion Check

Mode	Self recording/playback
Signal	400 Hz, –7.5 dBs, Audio input terminal
Measurement Point	Audio output terminal
Measuring Instrument	Audio level meter and distortion meter
Specified Value	Level: –7.5 ± 2 dBs Distortion rate: Below 0.5% (Note 1)

Note: 1) Value when the following filter is used

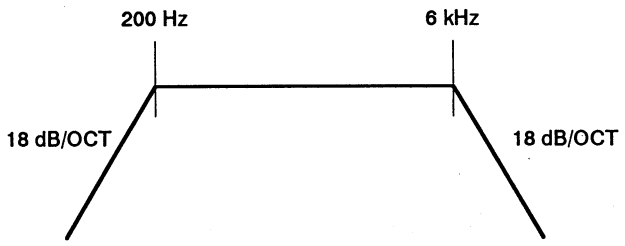

Fig. 7-3-48.

Checking method:

1) Input the 400 Hz, –7.5 dBs signal to the audio input terminal.
2) Record the signal.
3) Remove the input signal.
4) Playback the recorded section.
5) Check that the 400 Hz signal level of the audio output terminal is –7.5 ± 2 dBs, and that the distortion rate is below 0.5% (Note 1).

4. Overall Noise Level Check

Mode	Self recording
Signal	No signal: Audio input terminal
Measurement Point	Audio output terminal
Measuring Instrument	Audio level meter (Use an IHF-A curve auditory correction filter)
Specified Value	Below –65.0 dBs

Checking method:

1) Insert the shorting plug to the audio input terminal.
2) Record.
3) Remove the shorting plug.
4) Playback the recorded section.
5) Check that the noise level of the audio output terminal is below –65.0 dBs.

1. E-E Output Level Check (AU-169 board)

Mode	Record
Signal	400 Hz, –7.5 dBs, Audio input terminal
Measurement Point	Pin ⑥ of IC1301
Measuring Instrument	Audio level meter (Oscilloscope)
Specified Value	-7.5 ± 2 dBs $\left(925^{+240}_{-190}\ \text{mVp-p}\right)$

Checking method:

1) Check that the 400 Hz signal level satisfies the specified value.

2. Deviation Adjustment

Adjust to the optimum audio FM signal deviation.
If the adjustment is not correct, its playback level will differ from that of other units.

Mode	Playback
Signal	Alignment tape: For checking the operation (WR5-5NSP)
Measurement Point	Audio output terminal
Measuring Instrument	Oscilloscope
Adjustment Page	D
Adjustment Address	8F (1.5 MHz DEV)
Specified Value	-7.5 ± 0.5 dBs

Adjusting method:

1) Page: 1, address: 00, data: 01
2) Change the data of page: D, address: 8F, and adjust so that the 400 Hz signal level becomes the specified value.
3) Press the PAUSE button of the adjusting remote commander.

3. Overall Level Characteristic, Distortion Check

Mode	Self recording/playback
Signal	400 Hz, –7.5 dBs, Audio input terminal
Measurement Point	Audio output terminal
Measuring Instrument	Audio level meter and distortion meter
Specified Value	Level: -7.5 ± 2 dBs Distortion rate: Below 0.5% (Note 1)

Note: 1) Value when the following filter is used

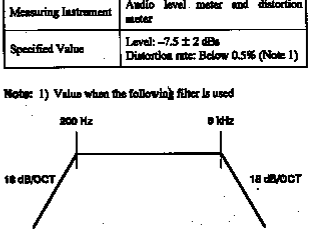

Fig. 7-S-48.

Checking method:

1) Input the 400 Hz, –7.5 dBs signal to the audio input terminal.
2) Record the signal.
3) Remove the input signal.
4) Playback the recorded section.
5) Check that the 400 Hz signal level of the audio output terminal is -7.5 ± 2 dBs, and that the distortion rate is below 0.5% (Note 1).

4. Overall Noise Level Check

Mode	Self recording
Signal	No signal: Audio input terminal
Measurement Point	Audio output terminal
Measuring Instrument	Audio level meter (Use an IHF-A curve auditory correction filter)
Specified Value	Below –65.0 dBs

Checking method:

1) Insert the shorting plug to the audio input terminal.
2) Record.
3) Remove the shorting plug.
4) Playback the recorded section.
5) Check that the noise level of the audio output terminal is below –65.0 dBs.

3-8. STEREO AUDIO SYSTEM ADJUSTMENT (CCD-TR72/TR80/TR400/TR430/TR750)

- Perform the adjustment using the color bar signal as a video signal input for VIDEO terminal.

[Connecting the measuring instruments for the audio]

Connect the audio system measuring instruments in addition to the video system measuring instruments as shown in Fig. 7-3-49, and perform adjustments at the power switch [player] or [video] position.

Set the Hi-Fi SOUND switch in the menu display to the following position unless specified otherwise.

- Stereo position

Note: 1) When inputting the audio signal, input the same signal to both L, and R channels, unless specified otherwise.
2) Be sure to insert the plug (shorting plug or dummy plug, etc.) into the audio terminal (right). If the plug is not inserted, the unit will be set into the monaural mode, and correct adjustments cannot be carried out.
(Monaural mode)
During recording ·· REC AFM RF1.7 MHz carrier will not be output.
During playback ·· The L+R signal will be output from the audio terminal (left).
3) The items to be adjusted for the R channel will be indicated within the [ ], in regard to the adjusting items to be adjusted for both L and R channels.

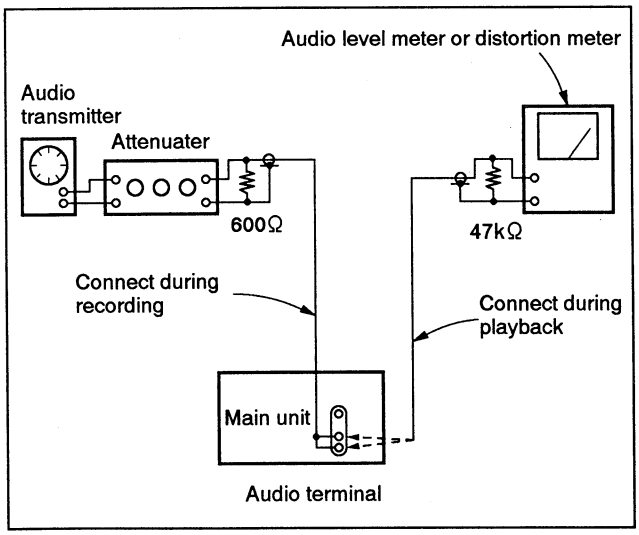

Fig. 7-3-49.

[Adjustment Procedure]

1) E-E output level check
2) REC matrix L–R adjustment
3) REC matrix L+R check
4) 1.5 MHz deviation adjustment
5) 1.7 MHz deviation adjustment
6) Overall level characteristics, distortion check
7) Separation check
8) Overall noise level check

1. E-E Output Level Check (AU-165 board)

Mode	Record
Signal	400 Hz, –7.5 dBs audio input terminal right [left]
Measurement Point	Pin ㊾ of IC1301 [Pin ㊿ of IC1301]
Measuring Instrument	Oscilloscope
Specified Value	925^{+240}_{-190} mVp-p (–7.5 ± 2 dBs)

Checking method:

1) Check that the 400 Hz signal level satisfies the specified value.

2. Matrix L-R Adjustment (AU-165 board)

Adjust the audio matrix. If improper, this causes deteriorated separation (with stereo signal).

Mode	Record
Signal	400 Hz, –7.5 dBs Input to both left and right terminals of the audio input terminal
Measurement Point	Pin ⑤ of IC1301
Measuring Instrument	Oscilloscope (Use 1:1 probe)
Adjustment Page	D
Adjustment Address	8C (AUDIO MATRIX (EE)) 8D (AUDIO MATRIX (PB))
Specified Value	0 ± 20 mVp-p

Adjusting method:

1) Page: 1, address: 00, data: 01
2) Change the data of page: D, address: 8C, and minimize the 400 Hz signal level.
3) Press the PAUSE button of the adjusting remote commander.
4) Set the same data as address: 8C of page: D to address: 8D of page: D.
5) Press the PAUSE button of the adjusting remote commander.

3-8. STEREO AUDIO SYSTEM ADJUSTMENT (CCD-TR72/TR80/TR400/TR430/TR760)

- Perform the adjustment using the color bar signal as a video signal input for VIDEO terminal.

[Connecting the measuring instruments for the audio]
Connect the audio system measuring instruments in addition to the video system measuring instruments as shown in Fig. 7-3-49, and perform adjustments at the power switch [player] or [video] position.

Set the Hi-Fi SOUND switch in the menu display to the following position unless specified otherwise.
- Stereo position

Note: 1) When inputting the audio signal, input the same signal to both L, and R channels, unless specified otherwise.
2) Be sure to insert the plug (shorting plug or dummy plug, etc.) into the audio terminal (right). If the plug is not inserted, the unit will be set into the monaural mode, and correct adjustments cannot be carried out.
(Monaural mode)
During recording → REC AFM RF1.7 MHz carrier will not be output.
During playback → The L+R signal will be output from the audio terminal (left).
3) The items to be adjusted for the R channel will be indicated within the [ ], in regard to the adjusting items to be adjusted for both L and R channels.

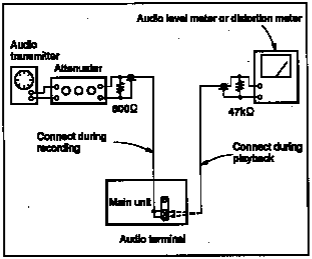

Fig. 7-3-49.

[Adjustment Procedure]
1) E-E output level check
2) REC matrix L–R adjustment
3) REC matrix L+R check
4) 1.5 MHz deviation adjustment
5) 1.7 MHz deviation adjustment
6) Overall level characteristics, distortion check
7) Separation check
8) Overall noise level check

1. E-E Output Level Check (AU-165 board)

Mode	Record
Signal	400 Hz, –7.5 dBs audio input terminal right [left]
Measurement Point	Pin ⑩ of IC1301 [Pin ⑨ of IC1301]
Measuring Instrument	Oscilloscope
Specified Value	925^{+240}_{-190} mVp-p (–7.5 ± 2 dBs)

Checking method:
1) Check that the 400 Hz signal level satisfies the specified value.

2. Matrix L–R Adjustment (AU-165 board)

Adjust the audio matrix. If improper, this causes deteriorated separation (with stereo signal).

Mode	Record
Signal	400 Hz, –7.5 dBs Input to both left and right terminals of the audio input terminal
Measurement Point	Pin ⑳ of IC1301
Measuring Instrument	Oscilloscope (Use 1:1 probe)
Adjustment Page	D
Adjustment Address	8C (AUDIO MATRIX (EE)) 8D (AUDIO MATRIX (PB))
Specified Value	0 ± 20 mVp-p

Adjusting method:
1) Page: 1, address: 00, data: 01
2) Change the data of page: D, address: 8C, and minimize the 400 Hz signal level.
3) Press the PAUSE button of the adjusting remote commander.
4) Set the same data as address: 8C of page: D to address: 8D of page: D.
5) Press the PAUSE button of the adjusting remote commander.

3. REC Matrix L+R Check (AU-165 board)

Mode	Record
Signal	1. 400 Hz, –7.5 dBs: Audio input terminal left No signal: Audio input terminal right 2. No signal: Audio input terminal left 400 Hz, –7.5 dBs: Audio input terminal right
Measurement Point	Pin ㊹ of IC1301
Measuring Instrument	Oscilloscope
Specified Value	The level difference is 0 ± 10 mVp-p when only the left terminal is input and when only the right terminal is input.

Note: When measuring the signal level of pin ㊹ of IC1301, wait for more than 1 minute after signal input before measuring. (To stabilize the AGC)

Adjusting method:
1) Input the 400 Hz, –7.5 dBs signal only to the audio input terminal (left). (Insert the shorting plug to the audio input terminal (right).)
2) Read the 400 Hz signal level of pin ㊹ of IC1301, and take it down. (Approximately 250 mVp-p)
3) Input the 400 Hz, –7.5 dBs signal only to the audio input terminal (right). (Insert the shorting plug to the audio input terminal (left).)
4) Check that the 400 Hz signal level of pin ㊹ of IC1301 is (the value that was taken down at step 2) ± 10 mVp-p.

4. 1.5 MHz Deviation Adjustment

Adjusts the 1.5 MHz AFM signal deviation. If improper, this causes deteriorated separation with Alignment tape (with stereo signal) and the playback level will differ from that of other unit.

Mode	Playback
Signal	Alignment tape: For checking the operation (WR5-5NSP)
Measurement Point	Audio output terminal left or right
Measuring Instrument	Oscilloscope, Level meter
Adjustment Page	D
Adjustment Address	8F (1.5 MHz DEV)
Specified Value	–7.5 ± 0.5 dBs

Adjusting method:
1) Page: 1, address: 00, data: 01
2) Change the data of page: D, address: 8F, and adjust so that the 400 Hz signal level becomes the specified value.
3) Press the PAUSE button of the adjusting remote commander.

5. 1.7 MHz Deviation Adjustment

Adjust the 1.7 MHz AFM deviation. If improper, this causes deteriorated separation (with stereo signal).

Mode	Playback
Signal	Alignment tape: AFM stereo for checking operation (WR5-9NS) Stereo (color bar) section
Measurement Point	Audio output terminal right
Measuring Instrument	Oscilloscope
Adjustment Page	D
Adjustment Address	8E (1.7 MHz DEV)
Specified Value	Cross talk component is below 30 mVp-p

Adjusting method:
1) Page: 1, address: 00, data: 01
2) Change the data of page: D, address: 8D, and minimize the cross talk component (400 Hz).
3) Press the PAUSE button of the adjusting remote commander.

3. REC Matrix L+R Check (AU-165 board)

Mode	Record
Signal	1. 400 Hz, –7.5 dBs: Audio input terminal left No signal: Audio input terminal right 2. No signal: Audio input terminal left 400 Hz, –7.5 dBs: Audio input terminal right
Measurement Point	Pin ⑭ of IC1301
Measuring Instrument	Oscilloscope
Specified Value	The level difference is 0 ± 10 mVp-p when only the left terminal is input and when only the right terminal is input.

Note: When measuring the signal level of pin ⑭ of IC1301, wait for more than 1 minute after signal input before measuring. (To stabilize the AGC)

Adjusting method:

1) Input the 400 Hz, –7.5 dBs signal only to the audio input terminal (left). (Insert the shorting plug to the audio input terminal (right).)
2) Read the 400 Hz signal level of pin ⑭ of IC1301, and take it down. (Approximately 250 mVp-p)
3) Input the 400 Hz, –7.5 dBs signal only to the audio input terminal (right). (Insert the shorting plug to the audio input terminal (left).)
4) Check that the 400 Hz signal level of pin ⑭ of IC1301 is (the value that was taken down at step 2) ± 10 mVp-p.

4. 1.5 MHz Deviation Adjustment

Adjusts the 1.5 MHz AFM signal deviation. If improper, this causes deteriorated separation with Alignment tape (with stereo signal) and the playback level will differ from that of other unit.

Mode	Playback
Signal	Alignment tape: For checking the operation (WR5-SNSP)
Measurement Point	Audio output terminal left or right
Measuring Instrument	Oscilloscope, Level meter
Adjustment Page	D
Adjustment Address	8F (1.5 MHz DEV)
Specified Value	–7.5 ± 0.5 dBs

Adjusting method:

1) Page: 1, address: 00, data: 01
2) Change the data of page: D, address: 8F, and adjust so that the 400 Hz signal level becomes the specified value.
3) Press the PAUSE button of the adjusting remote commander.

5. 1.7 MHz Deviation Adjustment

Adjust the 1.7 MHz AFM deviation. If improper, this causes deteriorated separation (with stereo signal).

Mode	Playback
Signal	Alignment tape: AFM stereo for checking operation (WR5-9NS) Stereo (color bar) section
Measurement Point	Audio output terminal right
Measuring Instrument	Oscilloscope
Adjustment Page	D
Adjustment Address	8E (1.7 MHz DEV)
Specified Value	Cross talk component is below 30 mVp-p

Adjusting method:

1) Page: 1, address: 00, data: 01
2) Change the data of page: D, address: 8D, and minimize the cross talk component (400 Hz).
3) Press the PAUSE button of the adjusting remote commander.

6. Overall Level Characteristics, Distortion Check

Mode	Self recording/playback
Signal	400 Hz, –7.5 dBs: Audio input terminal (left) [right] No signal: Audio input terminal (right) [left]
Measurement Point	Audio output terminal (left) [right]
Measuring Instrument	Audio level meter and distortion meter
Specified Value	Level: –7.5 ± 2 dBs Distortion rate: Below 0.8% (Note 2)

Note: 1) The [ ] indicates the measuring point during the right channel check.
2) Value when the 200 kHz to 6 kHz band-path filter is used

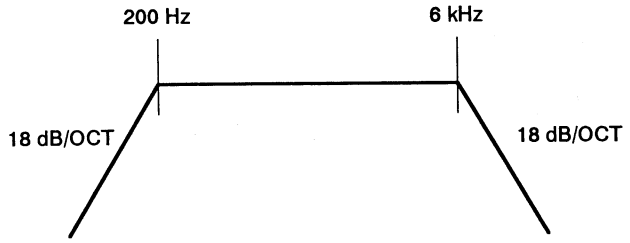

Fig. 7-3-50.

Checking method:
1) Input the 400 Hz, –7.5 dBs signal only to the audio input terminal (left) [right].
   Note: Be sure to insert the shorting plug to the terminal that was not signal input.
2) Record the signal.
3) Remove the input signal.
4) Playback the recorded section.
5) Check that the 400 Hz signal level of the audio output terminal (left) [right] is –7.5 ± 2 dBs, and that the distortion rate is below 0.8% (Note 2).

7. Separation Check

Mode	Self recording /playback
Signal	No signal: Audio input terminal (left) [right] 400 Hz, –7.5 dBs: Audio input terminal (right) [left]
Measurement Point	Audio output terminal (left) [right]
Measuring Instrument	Audio level meter (Use an IHF-A curve auditory correction filter)
Specified Value	Below –27.5 dBs

Note: The [ ] indicates the measuring point during the right channel check.

Checking method:
1) Insert a shorting plug into the audio input terminal (left) [right], and input a 1kHz, –7.5 dBs signal only to the audio input terminal (right) [left].
2) Record the signal.
3) Remove the input signal.
4) Playback the recorded section.
5) Check that the cross talk level (1 kHz) of the audio output terminal (left) [right] is below –27.5 dBs.

8. Overall Noise Level Check

Mode	Self recording/playback
Signal	No signal: Audio input terminal left and right
Measurement Point	Audio output terminal (left) [right]
Measuring Instrument	Audio level meter (Use an IHF-A curve auditory correction filter)
Specified Value	Below –62.5 dBs

Note: The [ ] indicates the measuring point during the right channel check.

Checking method:
1) Insert the shorting plug to both left and right of the audio input terminals.
2) Record.
3) Remove the shorting plug.
4) Playback the recorded section.
5) Check that the noise level of the audio output terminal (left) [right] is below –62.5 dBs.

6. Overall Level Characteristics, Distortion Check

Mode	Self recording/playback
Signal	400 Hz, –7.5 dBs: Audio input terminal (left) [right] No signal: Audio input terminal (right) [left]
Measurement Point	Audio output terminal (left) [right]
Measuring Instrument	Audio level meter and distortion meter
Specified Value	Level: –7.5 ± 2 dBs Distortion rate: Below 0.8% (Note 2)

Note: 1) The [ ] indicates the measuring point during the right channel check.
2) Value when the 200 kHz to 6 kHz band-path filter is used

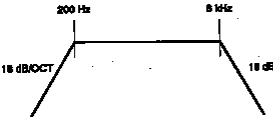

Fig. 7-3-50.

Checking method:
1) Input the 400 Hz, –7.5 dBs signal only to the audio input terminal (left) [right].
Note: Be sure to insert the shorting plug to the terminal that was not signal input.
2) Record the signal.
3) Remove the input signal.
4) Playback the recorded section.
5) Check that the 400 Hz signal level of the audio output terminal (left) [right] is –7.5 ± 2 dBs, and that the distortion rate is below 0.8% (Note 2).

7. Separation Check

Mode	Self recording /playback
Signal	No signal: Audio input terminal (left) [right] 400 Hz, –7.5 dBs: Audio input terminal (right) [left]
Measurement Point	Audio output terminal (left) [right]
Measuring Instrument	Audio level meter (Use an IHF-A curve auditory correction filter)
Specified Value	Below –27.5 dBs

Note: The [ ] indicates the measuring point during the right channel check.

Checking method:
1) Insert a shorting plug into the audio input terminal (left) [right], and input a 1kHz, –7.5 dBs signal only to the audio input terminal (right) [left].
2) Record the signal.
3) Remove the input signal.
4) Playback the recorded section.
5) Check that the cross talk level (1 kHz) of the audio output terminal (left) [right] is below –27.5 dBs.

8. Overall Noise Level Check

Mode	Self recording/playback
Signal	No signal: Audio input terminal left and right
Measurement Point	Audio output terminal (left) [right]
Measuring Instrument	Audio level meter (Use an IHF-A curve auditory correction filter)
Specified Value	Below –62.5 dBs

Note: The [ ] indicates the measuring point during the right channel check.

Checking method:
1) Insert the shorting plug to both left and right of the audio input terminals.
2) Record.
3) Remove the shorting plug.
4) Playback the recorded section.
5) Check that the noise level of the audio output terminal (left) [right] is below –62.5 dBs.

3-9. ARRANGEMENT DIAGRAM FOR ADJUSTMENT PARTS

DD BOARD (CONDUCTOR SIDE)

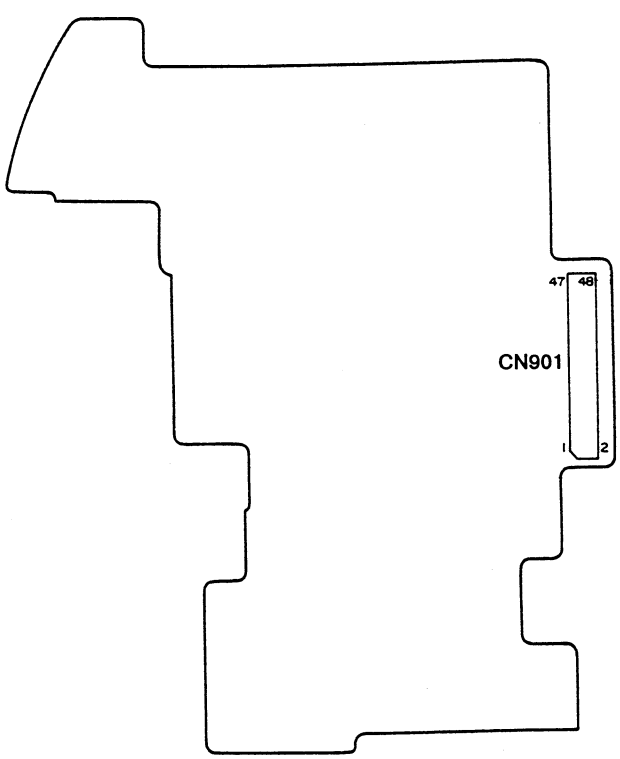

DD BOARD (COMPONENT SIDE)

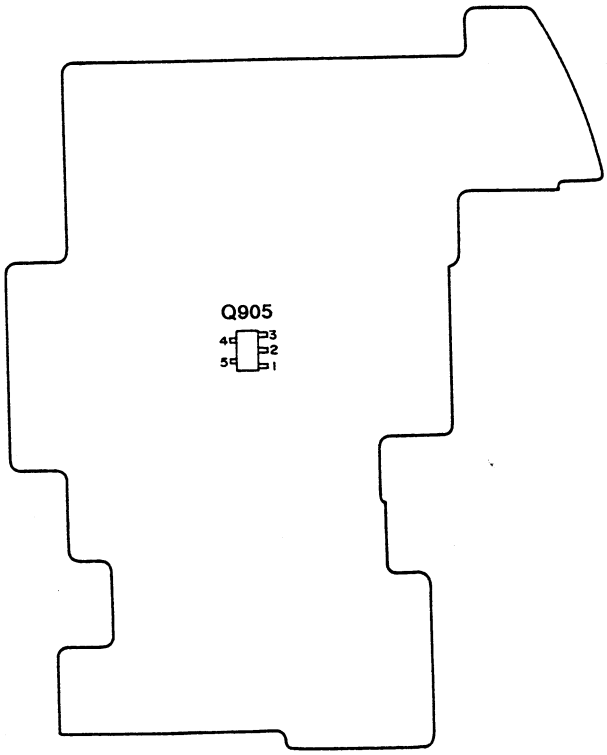

AU-169 BOARD (COMPONENT SIDE) (CCD-TR42/TR70/TR82/TR550)

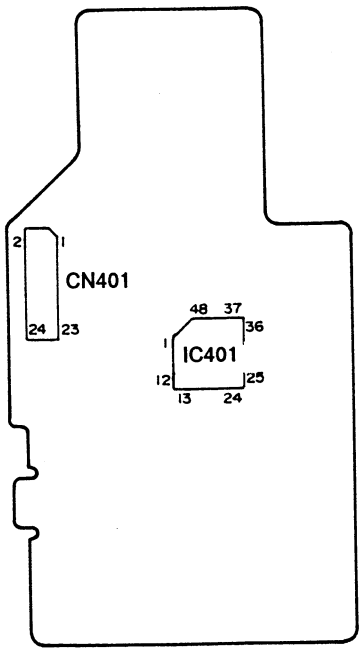

AU-165 BOARD (COMPONENT SIDE) (CCD-TR72/TR80/TR400/TR430/TR750)

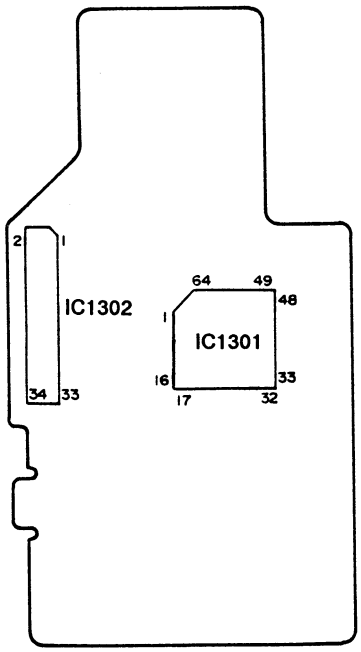

3-9. ARRANGEMENT DIAGRAM FOR ADJUSTMENT PARTS

DD BOARD (CONDUCTOR SIDE)

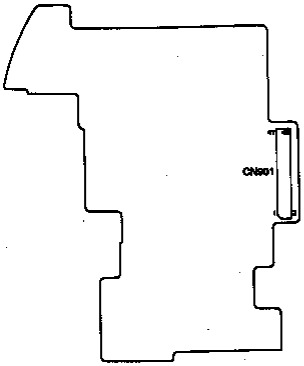

DD BOARD (COMPONENT SIDE)

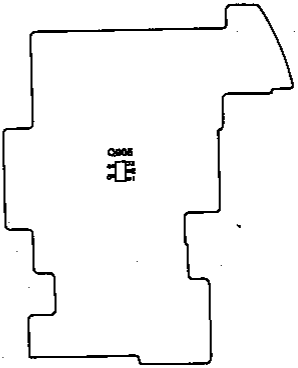

AU-189 BOARD (COMPONENT SIDE)
(CCD-TR42/TR70/TR82/TR550)

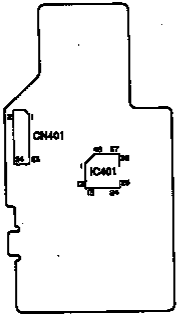

AU-185 BOARD (COMPONENT SIDE)
(CCD-TR72/TR80/TR400/TR430/TR750)

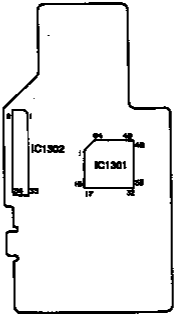

VS BOARD (COMPONENT SIDE)

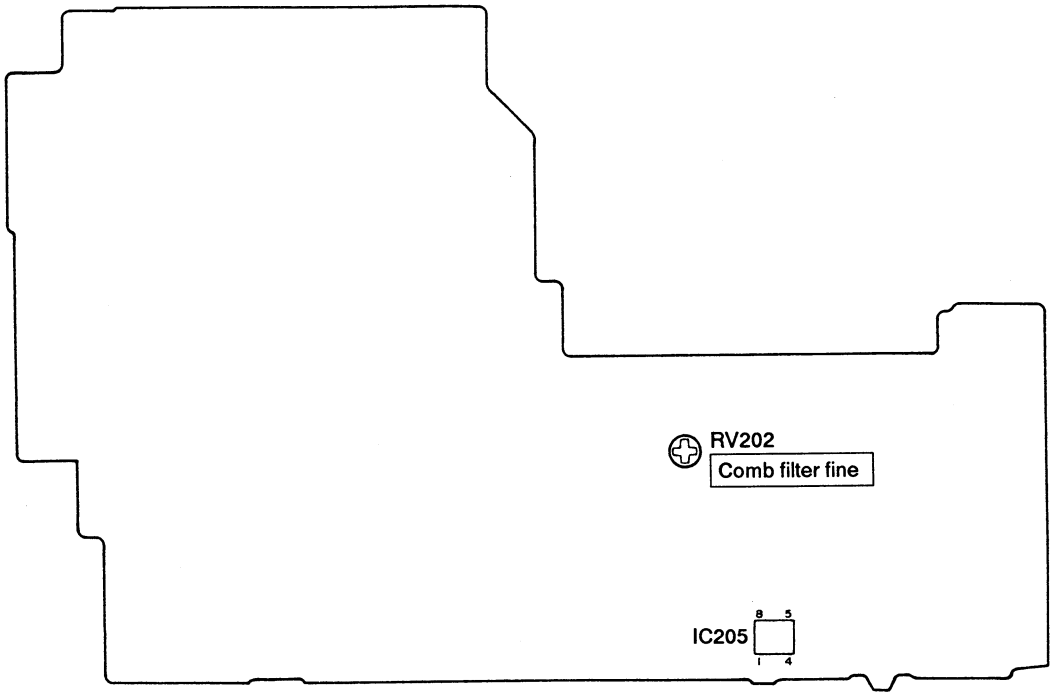

VS BOARD (CONDUCTOR SIDE)

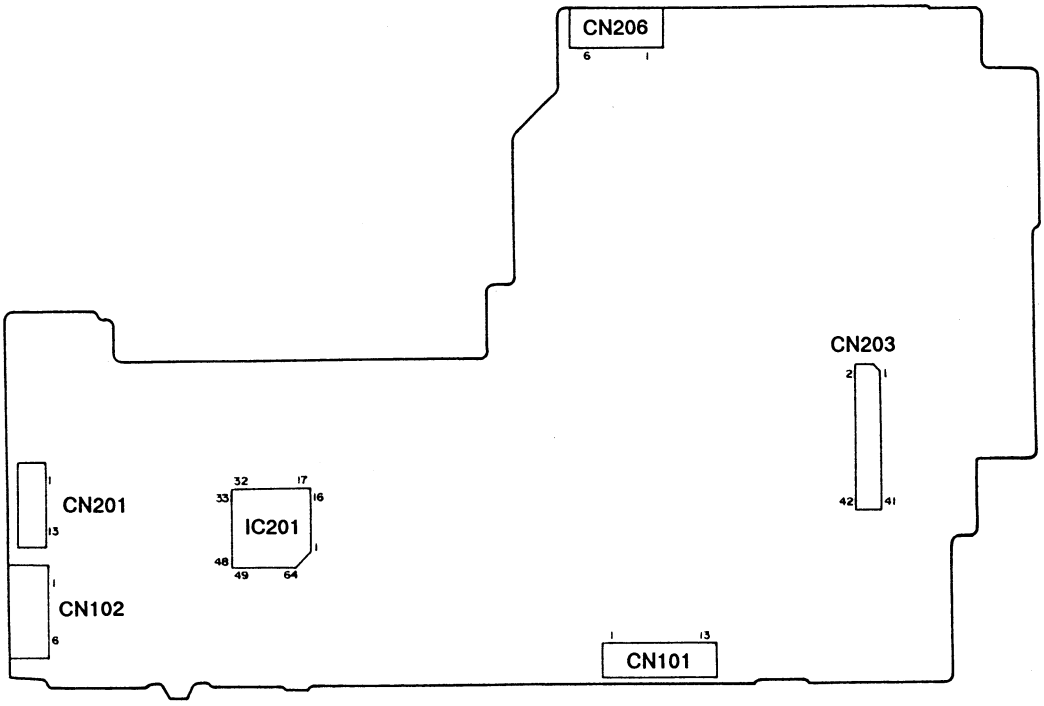

VS BOARD (COMPONENT SIDE)

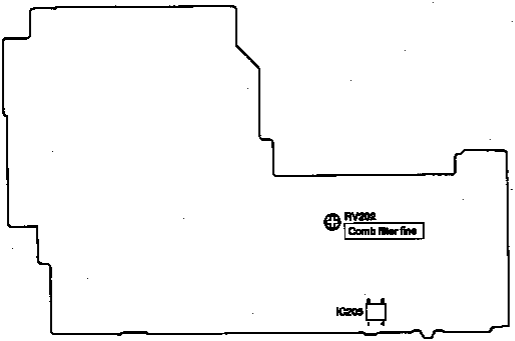

VS BOARD (CONDUCTOR SIDE)

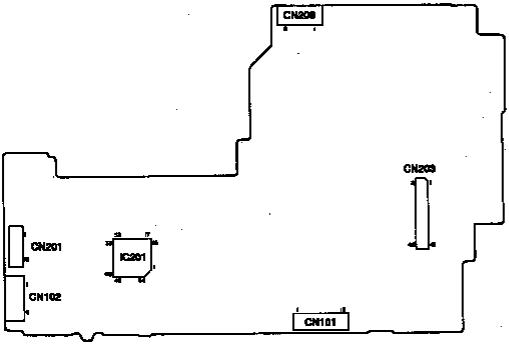

Identirying the Parts

In the Viewfinder

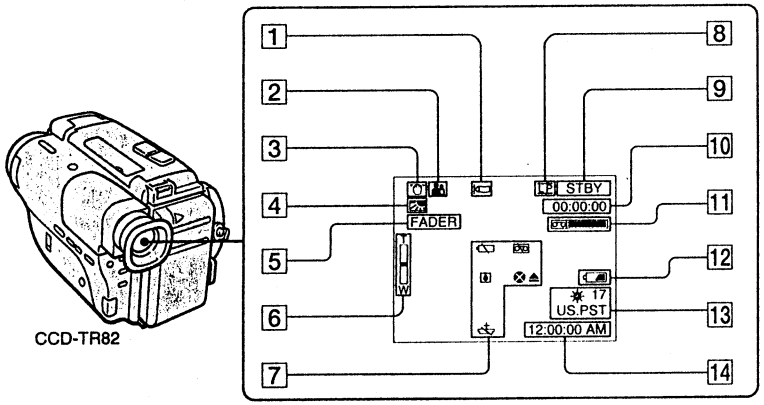

1 **Wind noise reduction indicator** (p.26) (CCD-TR72/TR80 only)

2 **PROGRAM AE mode indicator** (p.22)

3 **Steady Shot indicator** (p.24) (CCD-TR82 only)

4 **Back light indicator** (p.21)

5 **FADER indicator** (p.23)

6 **Power zoom indicator** (p.13)

7 **Warning indicator** (p.51)

8 **Lights up when playing back a tape recorded in LP mode** (p.33)

9 **Tape transport mode** (p.11, 17)

10 **Tape counter** (p.12)

11 **Tape remaining indicator**

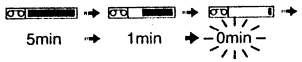

12 **Battery remaining indicator** (p.34)

13 **World clock indicator** (p.27)

14 **Date or Time** (p.20)

Warning Indicators

If indicators flash in the viewfinder, or a caution lamp on the camcorder flahses, check the following:
♪ : You can hear the beep sound when the BEEP is set to ON.

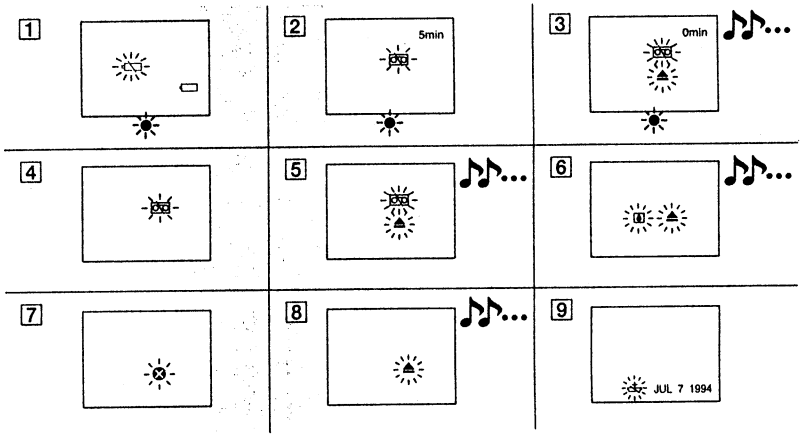

1 Battery Remaining
Slow flashing: The battery is weak.
Fast flashing: The battery is dead.

2 The tape is near the end.

3 The tape has run out.

4 No tape has been inserted.

5 The tab on the tape is out (red) (p.9).

6 Moisture condensation has occurred (p.36).

7 The video heads may be contaminated (p.37).

8 Some other trouble has occurred.
Disconnect the power source and contact your Sony dealer or local authorized facility.

9 The lithium battery is weak or the lithium battery is not installed (p.30).

Identifying the Parts

In the viewfinder

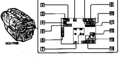

1. Wind noise reduction indicator (p.26) (CCD-TR72/TR80 only)
2. PROGRAM AE mode indicator (p.22)
3. Steady Shot indicator (p.24) (CCD-TR80 only)
4. Back light indicator (p.21)
5. FADER indicator (p.25)
6. Power zoom indicator (p.13)
7. Warning indicator (p.51)
8. Lights up when playing back a tape recorded in LP mode (p.33)
9. Tape transport mode (p.11, 17)
10. Tape counter (p.12)
11. Tape remaining indicator
    ▬ → ▬ → ▭ →
    5min → 1min → 0min
12. Battery remaining indicator (p.34)
    ▬ → ▬ → ▭ → ▭ → ▭
13. World clock indicator (p.27)
14. Date or Time (p.20)

Warning Indicators

If indicators flash in the viewfinder, or a caution lamp on the camcorder flashes, check the following:
♪: You can hear the beep sound when the BEEP is set to ON.

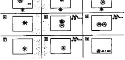

1. Battery Remaining
   Slow flashing: The battery is weak.
   Fast flashing: The battery is dead.
2. The tape is near the end.
3. The tape has run out.
4. No tape has been inserted.
5. The tab on the tape is out (red) (p.8).
6. Moisture condensation has occurred (p.36).
7. The video heads may be contaminated (p.37).
8. Some other trouble has occurred.
   Disconnect the power source and contact your Sony dealer or local authorized facility.
9. The lithium battery is weak or the lithium battery is not installed (p.30).

4-3. SEMICONDUCTORS

DTA123JK
MSA1586
MSC4116
RN1302
UN511D
UN5113
UN5213
2SA1162
2SA1163
2SA1576
2SA1838
2SB1218
2SB1295
2SB1462
2SC1623
2SC4116
2SC4154
2SC4178
2SC4400
2SC4555
2SC4909

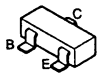

FP101
FP102

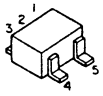

MTD6N154

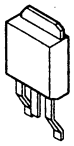

UN094
2SB1121
2SB1122
2SB798
2SD1615

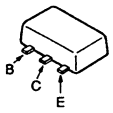

UN5111
UN5211

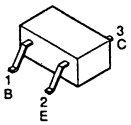

XN4113
XN4213
XN4501

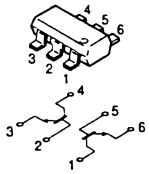

XN4312
XN4601

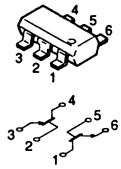

XN4401

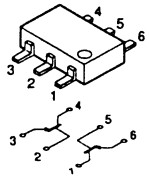

2SK1875

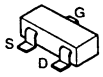

MA110
MA111
MA365
1SS352

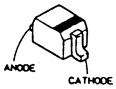

MA142WA
MA152WA

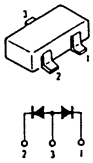

MA142WK

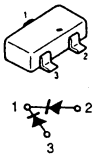

MA4Z082WA

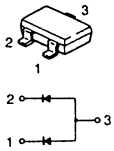

MA6S121

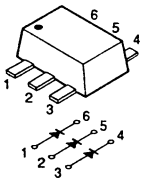

MA728

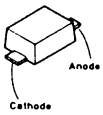

MA796

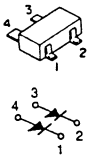

02Z13

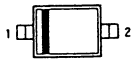

1SS226

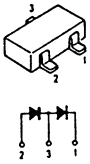

1SS250

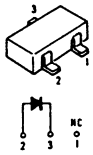

LN1251C

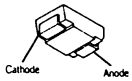

LN1371G

4-3. SEMICONDUCTORS

DTA123JK
MSA1580
MSC4110
RN1302
UN411D
UN5113
UN5213
2SA1162
2SA1163
2SA1879
2SA1538
2SB1218
2SB1236
2SB1462
2SC1623
2SC4115
2SC4154
2SC4176
2SC4460
2SC4505
2SC4969

FP101
FP103

MTD6N154

UN904
2SB1121
2SB1122
2SB706
2SD1615

UN5111
UN5211

XN4113
XN4213
XN4501

XN4312
XN4601

XN4401

2SK1075

MA110
MA111
MA365
1SS352

MA142WA
MA162WA

MA143WK

MA4Z062WA

MA6S121

MA728

MA704

MZ13

1SS226

1SS250

LN1261C

LN1271C

Ref. No.	Part No.	Description	Remark
M003	1-542-162-11	MICROHONE UNIT	
M901	A-7048-564-A	DRUM ASSY (DGH-78A-R) (TR42/TR70/TR72/TR80/TR82/TR430/TR550)	
M901	A-7048-633-A	DRUM ASSY (DGH-92A-R) (TR400/TR750)	
M905	1-698-364-01	MOTOR ASSY, FOCUS (TYPE I)	
M906	1-698-363-01	MOTOR ASSY, ZOOM (TYPE I)	
M907	3-708-888-01	METER, IG (TYPE II)	
M908	3-708-889-01	MOTOR ASSY, FOCUS (TYPE II)	
M909	3-708-887-01	MOTOR ASSY, ZOOM (TYPE II)	

****

ACCESSORIES & PACKING MATERIALS
****

	1-467-574-21	REMOTE COMMANDER (RMT-708)	
	1-575-334-11	CORD, CONNECTION (A/V connecting cable) (TR72/TR80/TR400/TR430/TR750)	
	1-575-335-21	CORD, CONNECTION (S VIDEO connecting cable) (TR400/TR750)	
	3-738-517-01	BELT (S), SHOULDER	
	3-758-475-21	MANUAL, INSTRUCTION (ENGLISH) (TR42/TR70/TR72/TR80/TR82)	
	3-758-475-31	MANUAL, INSTRUCTION (FRENCH) (TR42/TR70:Canadian/TR80:Canadian/TR82:Canadian)	
	3-758-742-21	MANUAL, INSTRUCTION (ENGLISH) (TR400)	
	3-758-742-31	MANUAL, INSTRUCTION (FRENCH) (TR400:Canadian)	
	3-758-782-11	MANUAL, INSTRUCTION (ENGLISH, SPANISH) (TR430/TR550)	
	3-758-782-41	MANUAL, INSTRUCTION (CHINESE) (TR430/TR550:E)	
	3-758-783-11	MANUAL, INSTRUCTION (ENGLISH, SPANISH) (TR750)	
	3-758-783-41	MANUAL, INSTRUCTION (CHINESE) (TR750:E)	
	3-758-964-11	MANUAL, INSTRUCTION (KOREAN) (TR550:Tourist/TR750:Tourist)	
*	3-795-581-21	SAFEGUARD (SONY), IMPORTANT (TR400:US/TR70:US/TR80:US/TR82:US)	
*	3-795-581-21	SAFEGUARD (SONY), IMPORTANT (TR72)	
*	3-958-198-11	INDIVIDUAL CARTON (TR400)	
*	3-958-198-31	INDIVIDUAL CARTON (TR750)	
*	3-958-663-01	INDIVIDUAL CARTON (TR82)	
*	3-958-663-11	INDIVIDUAL CARTON (TR72)	
*	3-958-663-21	INDIVIDUAL CARTON (TR42)	
*	3-958-663-31	INDIVIDUAL CARTON (TR70)	
*	3-958-663-41	INDIVIDUAL CARTON (TR80)	
*	3-958-663-71	INDIVIDUAL CARTON (TR550)	
*	3-958-663-81	INDIVIDUAL CARTON (TR430)	
*	3-958-664-01	CUSHION, (LOWER)	
*	3-958-665-01	CUSHION, ACC	
	A-6768-253-A	RFU ADAPTOR (RFU-90UC) (Except Tourist)	
**	AC-V25/V25A	AC POWER ADAPTOR	
***	NP-55	BATTERY PACK	

Note.

** MARK PARTS IS AVAILABLE FOR REPAIR SERVICE.

*** MARK PARTS IS AVAILABLE AS AN OPTIONAL ACCESSORY.

****

****
HARDWARE LIST
****

#1	7-627-553-47	PRECISION SCREW +P 2X4 TYPE 3	

Ref. No.	Part No.	Description	Remark
M003	1-542-162-11	MICROPHONE UNIT	
M101	A-7048-504-A	DRUM ASSY (DCH-734-K) (TR42/TR70/TR72/TR80/TR82/TR430/TR550)	
M101	A-7048-623-A	DRUM ASSY (DCH-692-K) (TR400/TR750)	
M105	1-698-354-01	MOTOR ASSY, FOCUS (TYPE I)	
M106	1-698-353-01	MOTOR ASSY, ZOOM (TYPE I)	
M107	3-704-888-01	METER, IG (TYPE K)	
M108	3-704-849-01	MOTOR ASSY, FOCUS (TYPE II)	
M109	3-704-867-01	MOTOR ASSY, ZOOM (TYPE II)	

****

ACCESSORIES & PACKING MATERIALS
****

	1-467-574-21	REMOTE COMMANDER (RMT-704)	
	1-575-834-11	CORD, CONNECTION (A/V connecting cable) (TR72/TR80/TR400/TR430/TR750)	
	1-575-835-21	CORD, CONNECTION (S VIDEO connecting cable) (TR42/42/TR750)	
	2-722-617-01	BELT (S), SHOULDER	
	3-758-475-21	MANUAL, INSTRUCTION (ENGLISH) (TR42/TR70/TR72/TR80/TR82)	
	3-758-475-31	MANUAL, INSTRUCTION (FRENCH) (TR42/TR70:Canadian/TR80:Canadian/TR82:Canadian)	
	3-758-742-21	MANUAL, INSTRUCTION (ENGLISH) (TR400)	
	3-758-742-31	MANUAL, INSTRUCTION (FRENCH) (TR400:Canadian)	
	3-758-782-11	MANUAL, INSTRUCTION (ENGLISH,SPANISH) (TR430/TR550)	
	3-758-782-41	MANUAL, INSTRUCTION (CHINESE) (TR430/TR550:E)	
	3-758-783-11	MANUAL, INSTRUCTION (ENGLISH,SPANISH) (TR750)	
	3-758-783-41	MANUAL, INSTRUCTION (CHINESE) (TR750:E)	
	3-758-984-11	MANUAL, INSTRUCTION (KOREAN) (TR550:Tourist/TR750:Tourist)	
*	3-795-581-21	SAFEGUARD (SONY), IMPORTANT (TR400:US/TR70:US/TR80:US/TR82:US)	
*	3-795-581-21	SAFEGUARD (SONY), IMPORTANT (TR72)	
*	3-968-198-11	INDIVIDUAL CARTON (TR400)	
*	3-968-198-31	INDIVIDUAL CARTON (TR750)	
*	3-968-668-01	INDIVIDUAL CARTON (TR82)	
*	3-968-663-11	INDIVIDUAL CARTON (TR72)	
*	3-968-663-21	INDIVIDUAL CARTON (TR42)	
*	3-968-663-31	INDIVIDUAL CARTON (TR70)	
*	3-968-663-41	INDIVIDUAL CARTON (TR80)	
*	3-968-663-71	INDIVIDUAL CARTON (TR550)	
*	3-968-663-81	INDIVIDUAL CARTON (TR430)	
*	3-968-664-01	CUSHION, (LOWER)	
*	3-968-665-01	CUSHION, ACC	
	A-6768-253-A	RPU ADAPTOR (RPU-900C) (Except Tourist)	

Ref. No.	Part No.	Description	Remark
**	AC-V25/V25A	AC POWER ADAPTOR	
***	NP-55	BATTERY PACK	

Note:
* MARK PARTS IS AVAILABLE FOR REPAIR SERVICE.
** MARK PARTS IS AVAILABLE AS AN OPTIONAL ACCESSORY.

****

HARDWARE LIST
****

#1	7-627-558-47	PRECISION SCREW +P EX4 TYPE 3	

FOR CAMERA COLOR REPRODUCTION ADJUSTMENT

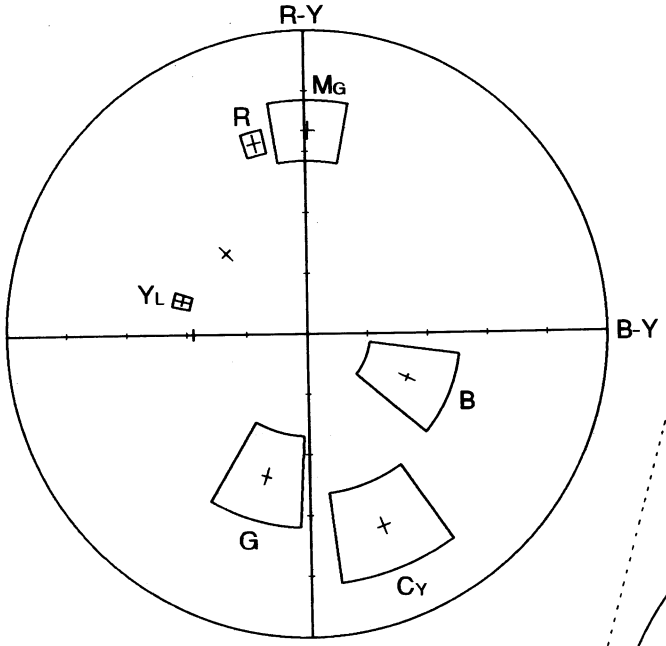

CCD-TR42/TR70/TR72/TR80/TR430

FOR CAMERA COLOR REPRODUCTION ADJUSTMENT

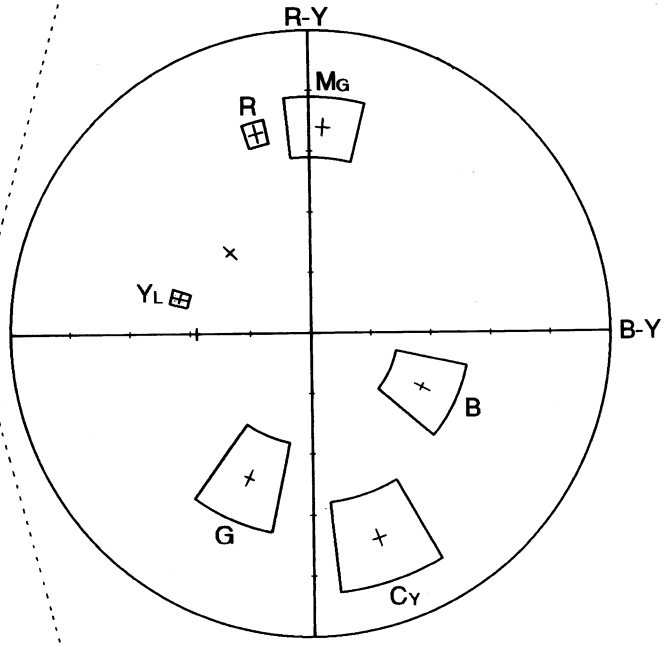

CCD-TR400/TR750

FOR CAMERA COLOR REPRODUCTION ADJUSTMENT

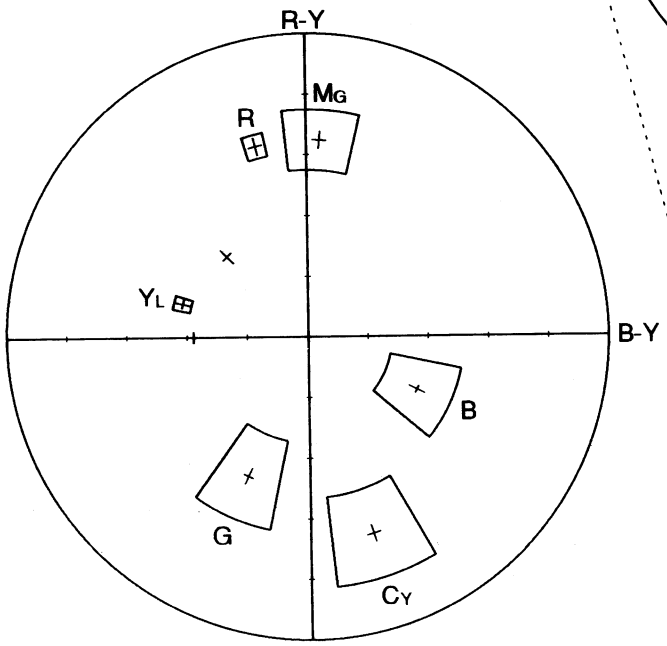

CCD-TR82/TR550

FOR CAMERA COLOR REPRODUCTION ADJUSTMENT

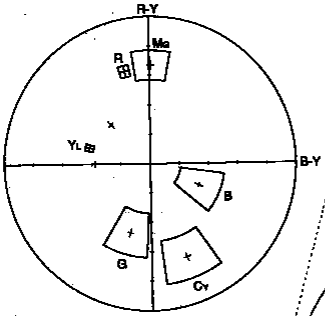

CCD-TR42/TR70/TR72/TR80/TR430

FOR CAMERA COLOR REPRODUCTION ADJUSTMENT

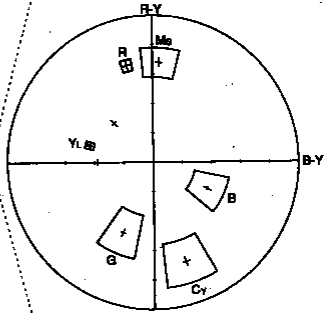

CCD-TR400/TR750

FOR CAMERA COLOR REPRODUCTION ADJUSTMENT

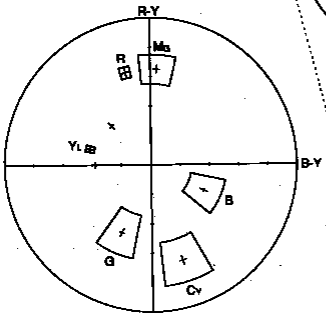

CCD-TR82/TR650